US00D755859S

(12) United States Design Patent
Loew

(10) **Patent No.: US D755,859 S**
(45) **Date of Patent: ** May 10, 2016**

(54) **MILLING MACHINE**

(71) Applicant: **BOMAG GmbH**, Boppard (DE)

(72) Inventor: **Roland Loew**, Klein-Winternheim (DE)

(73) Assignee: **BOMAG GmbH**, Boppard (DE)

(**) Term: **14 Years**

(21) Appl. No.: **29/517,376**

(22) Filed: **Feb. 12, 2015**

(30) **Foreign Application Priority Data**

Aug. 12, 2014 (EM) 002518589-0010
Aug. 12, 2014 (EM) 002518589-0011

(51) **LOC (10) Cl.** **12-09**

(52) **U.S. Cl.**
USPC **D15/24**

(58) **Field of Classification Search**
USPC ..... D15/22–26, 10; 299/398; 37/381, 18 R, 37/392, 388; 404/90–92, 84.05, 84.1, 404/84.2, 84.5, 84.8, 83
CPC E01C 19/004; E01C 23/88; E01C 23/088; E01C 23/16; E01C 23/00; E01C 2301/50; B28D 1/18; B28D 1/186
See application file for complete search history.

(56) **References Cited**

U.S. PATENT DOCUMENTS

D258,887 S * 4/1981 Swisher, Jr. D15/22
4,325,580 A * 4/1982 Swisher, Jr. B28D 1/186 299/39.8
4,938,537 A * 7/1990 Rife, Jr. E01C 23/088 172/112
5,190,398 A * 3/1993 Swisher, Jr. B62D 33/0633 172/435
5,639,181 A * 6/1997 Swisher, Jr. B60C 7/00 152/323
7,144,192 B2 * 12/2006 Holl E01C 23/088 404/122
D626,573 S * 11/2010 Koetting D15/22
D635,593 S * 4/2011 Berning D15/28
D642,599 S * 8/2011 Busley D15/28
D660,876 S * 5/2012 Ewringmann D15/22
2005/0093282 A1 * 5/2005 Gaertner E01C 23/08 280/775
2008/0152428 A1 * 6/2008 Berning E01C 23/088 404/84.1

* cited by examiner

Primary Examiner — Mark Goodwin
(74) *Attorney, Agent, or Firm* — Wood, Herron & Evans, LLP

(57) **CLAIM**

The ornamental design for a milling machine, as shown and described.

DESCRIPTION

FIG. **1** is a left side elevational view of my new milling machine design with roof open;
FIG. **2** is a right side elevational view thereof;
FIG. **3** is a front elevational view thereof;
FIG. **4** is a rear elevational view thereof;
FIG. **5** is a top plan view thereof;
FIG. **6** is a bottom plan view thereof;
FIG. **7** is a front left perspective view with roof open thereof;
FIG. **8** is a rear left perspective view with roof open thereof;
FIG. **9** is a front right perspective view thereof;
FIG. **10** is a rear right perspective view thereof;
FIG. **11** is a front left perspective view with roof closed thereof;
FIG. **12** is a rear left perspective view with roof closed thereof; and,
FIG. **13** is a left side elevational view with roof closed thereof.

1 Claim, 12 Drawing Sheets

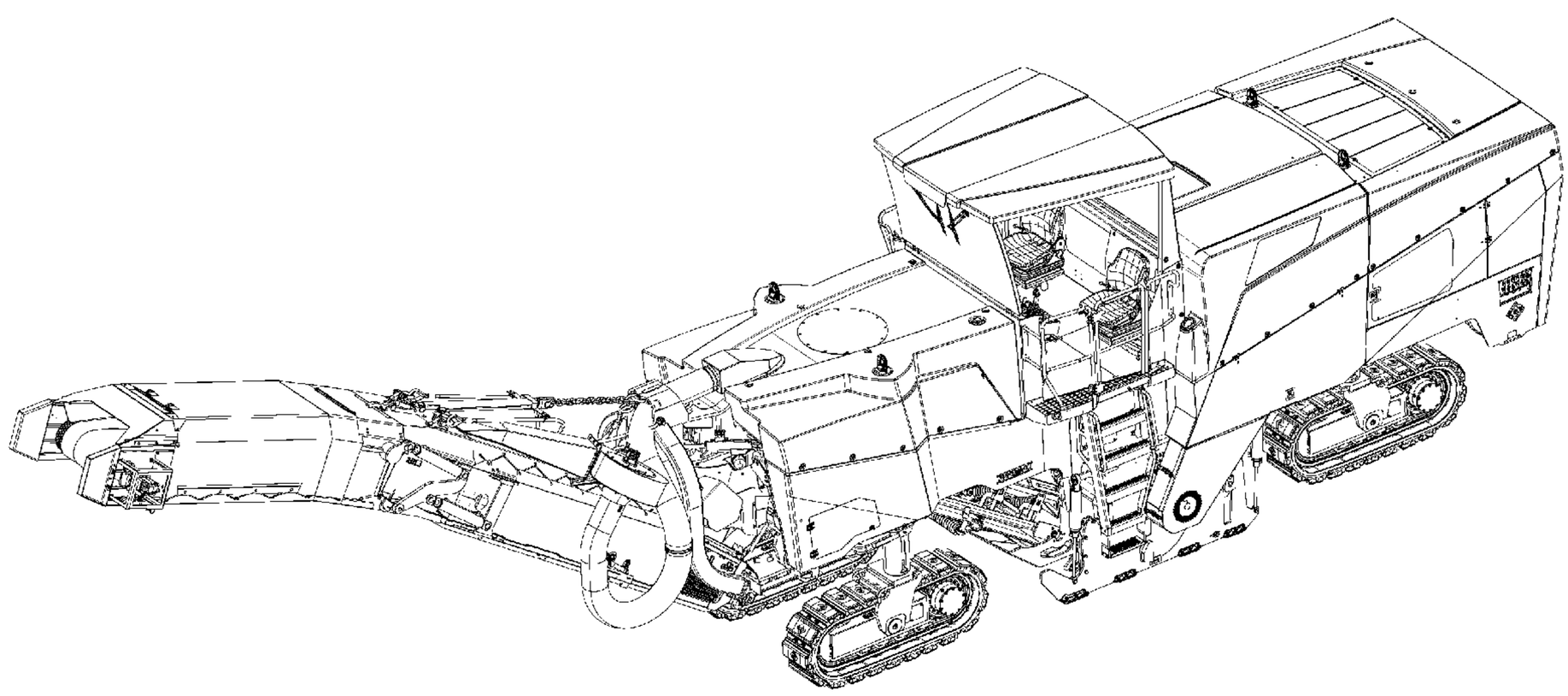

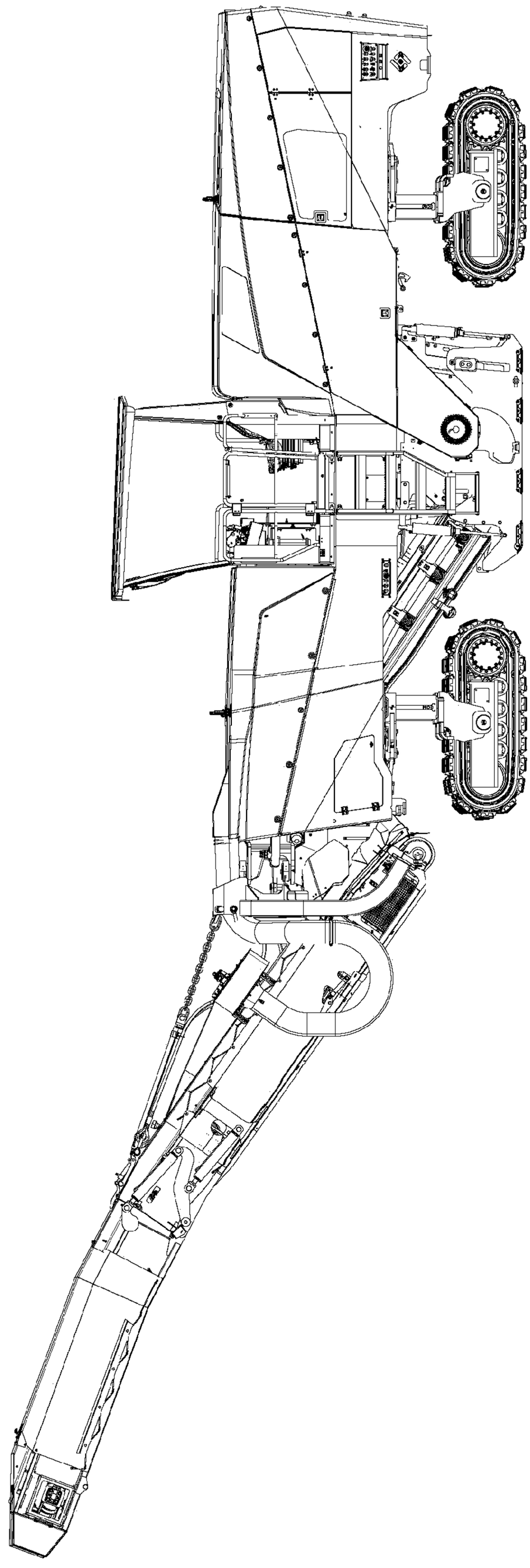

FIG. 1

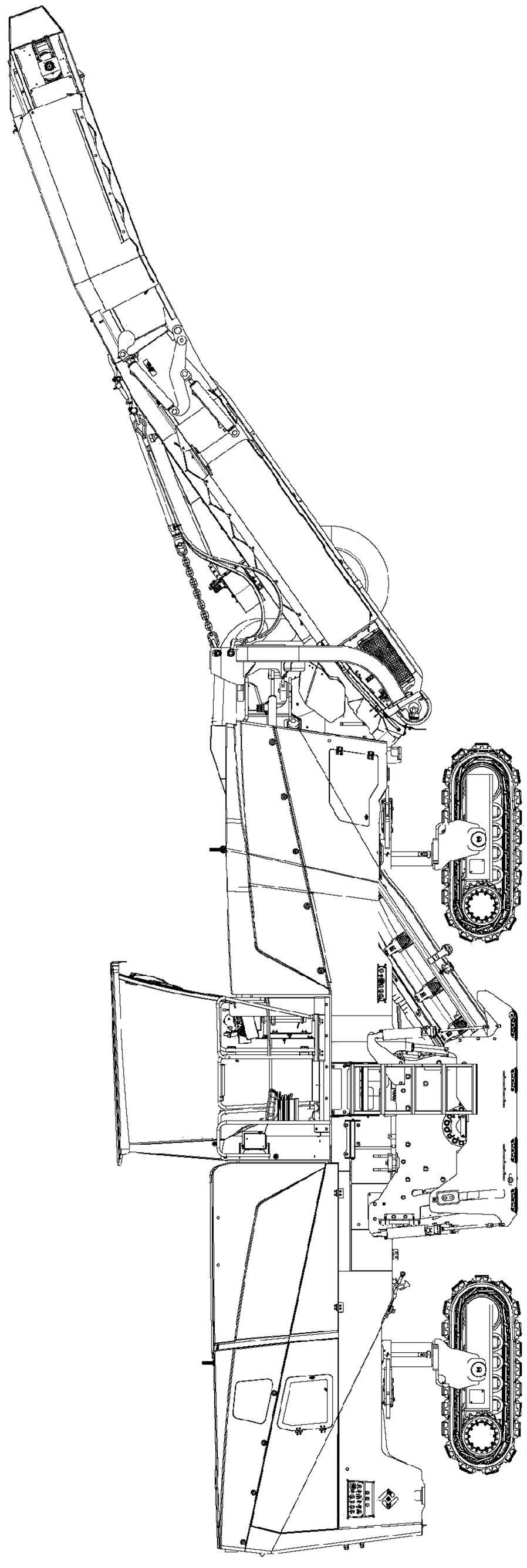

FIG. 2

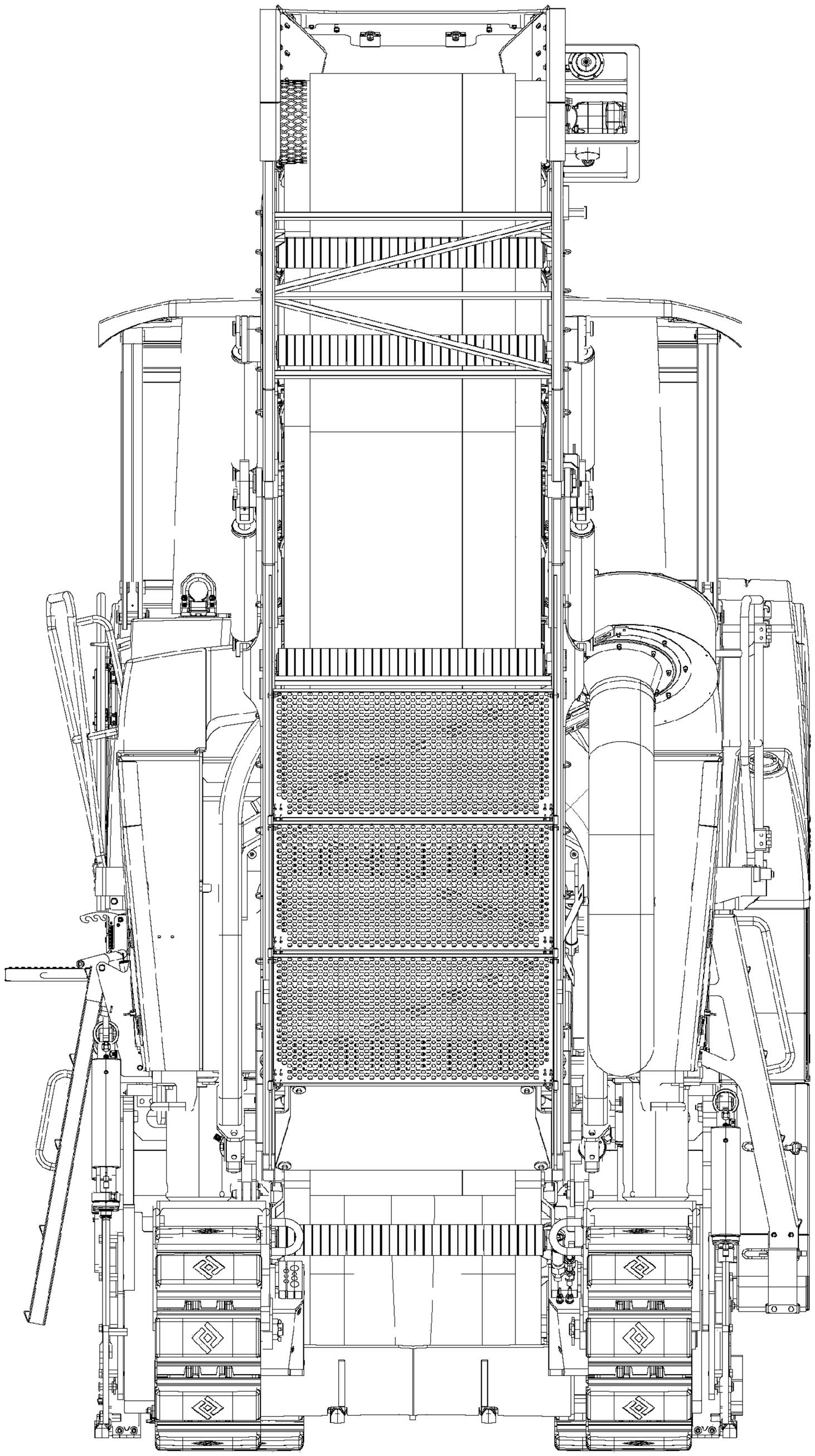

FIG. 3

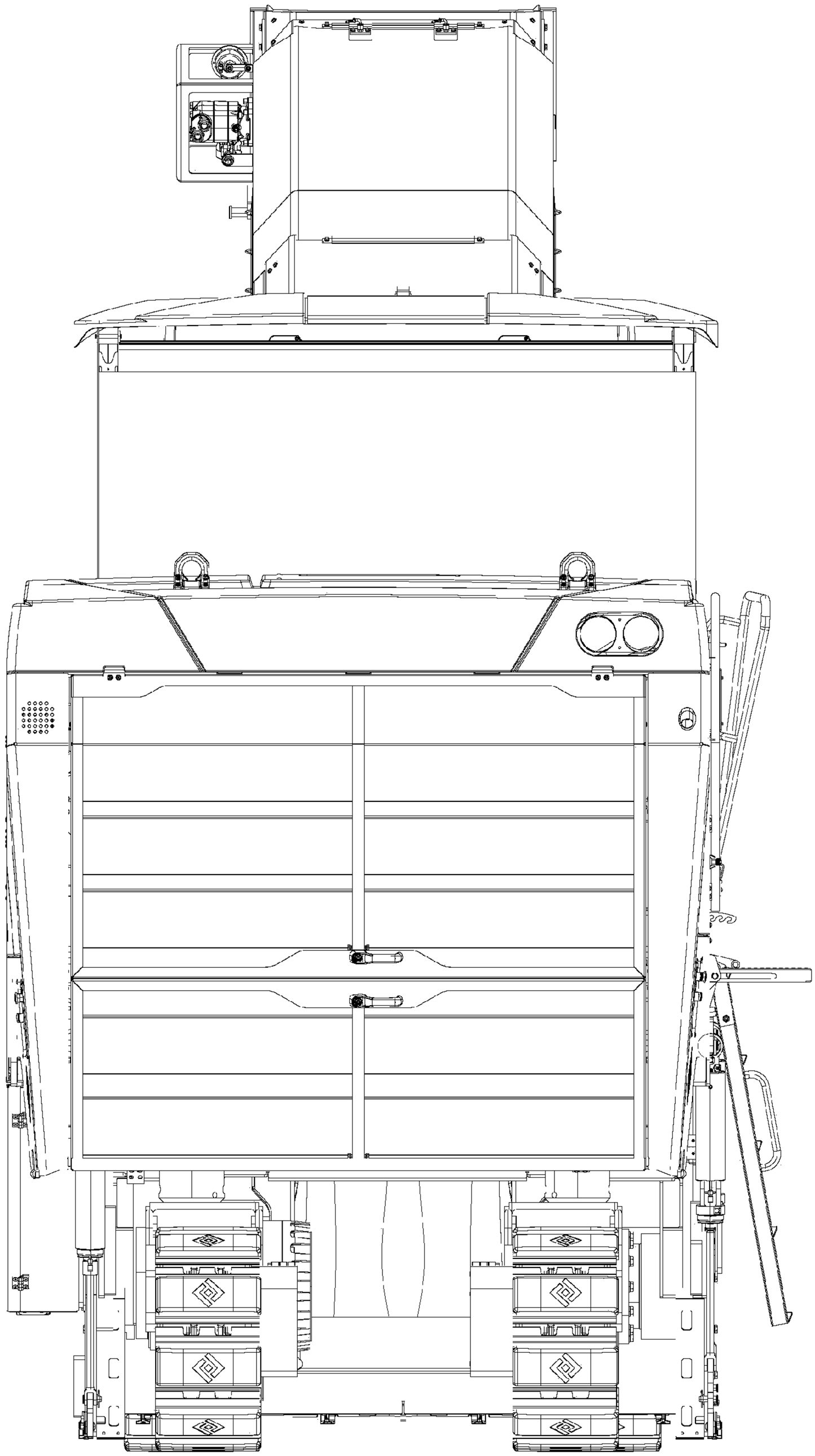

FIG. 4

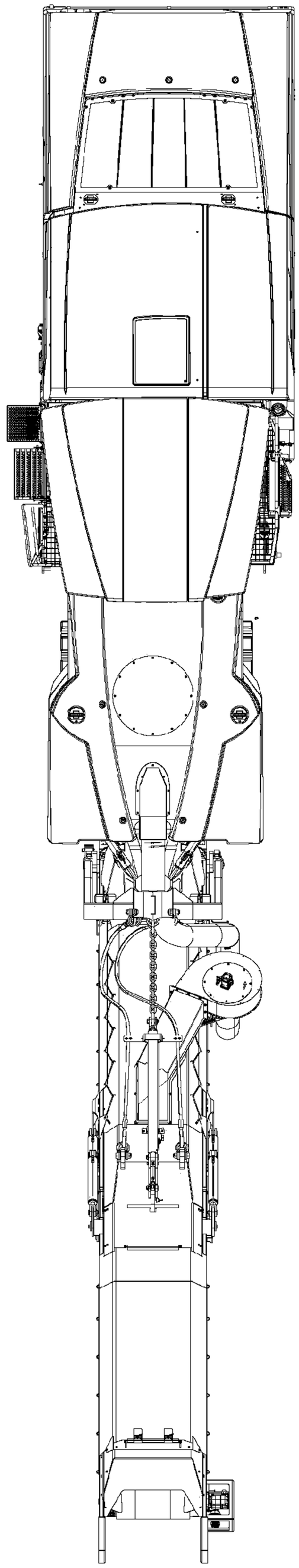

FIG. 5

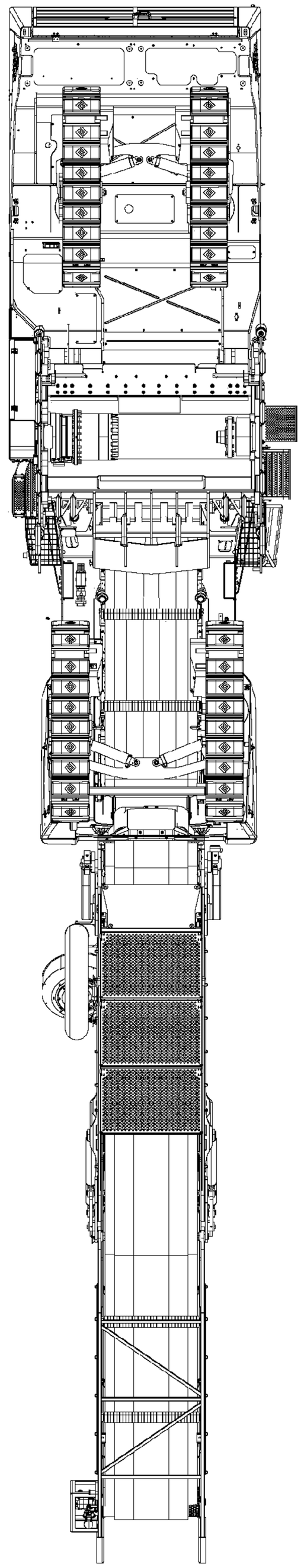

FIG. 6

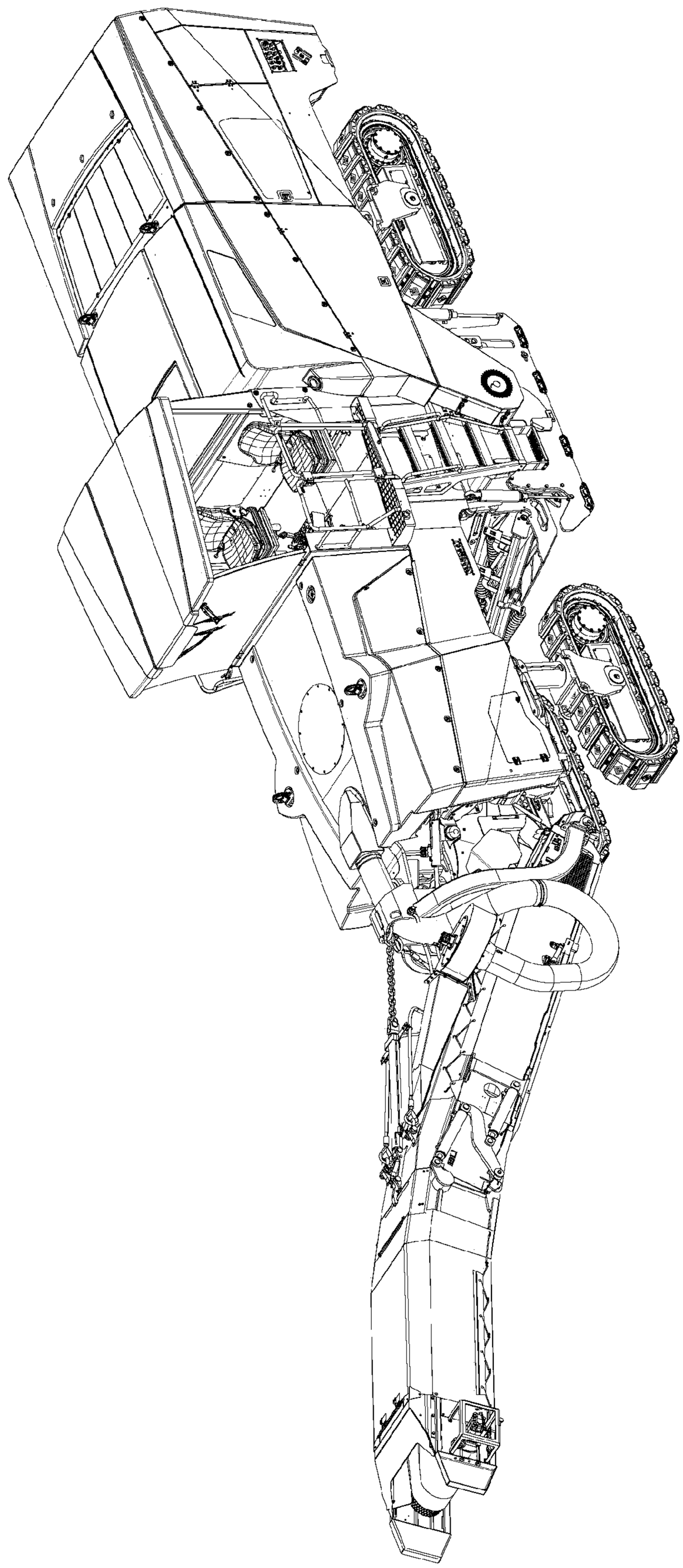

FIG. 7

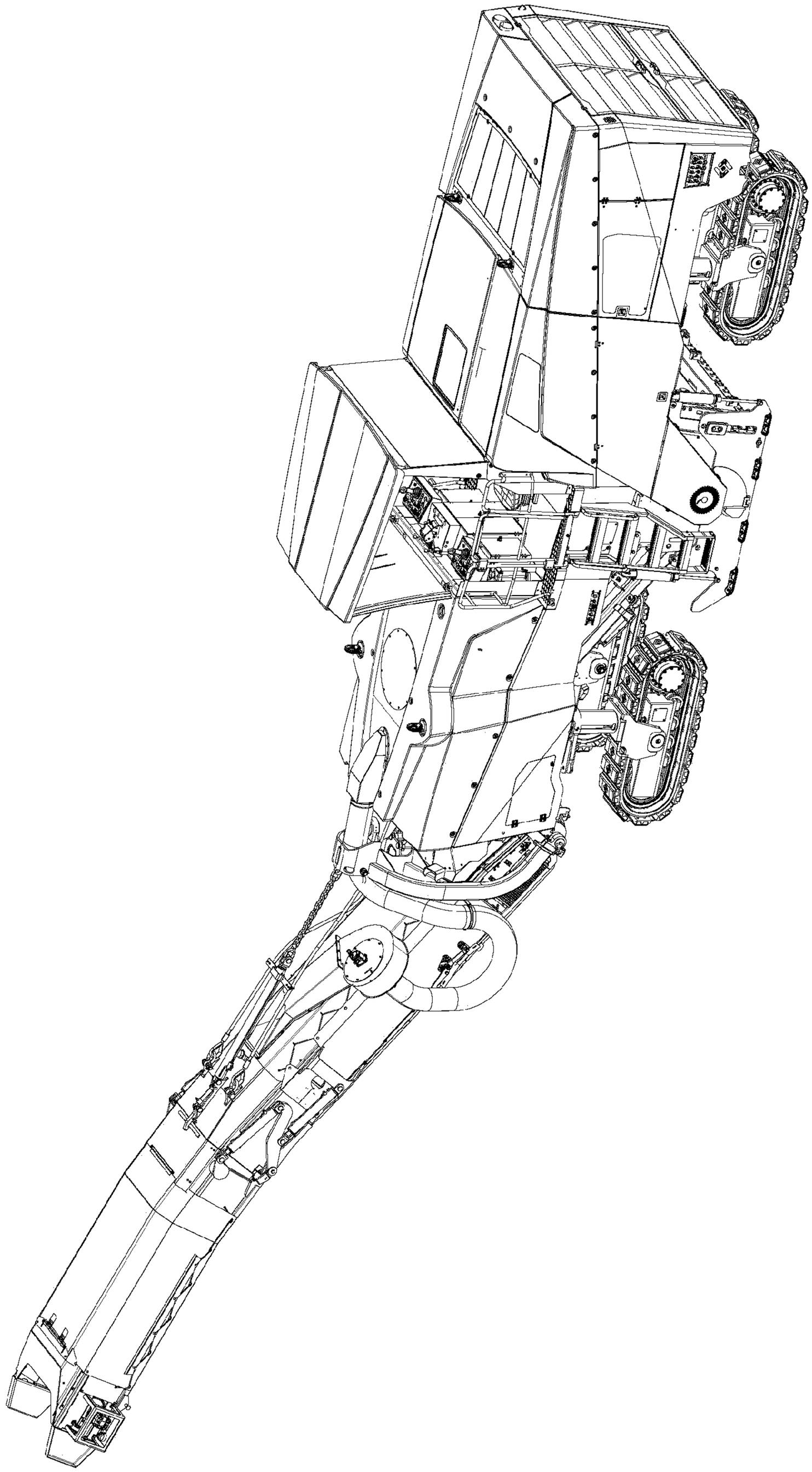

FIG. 8

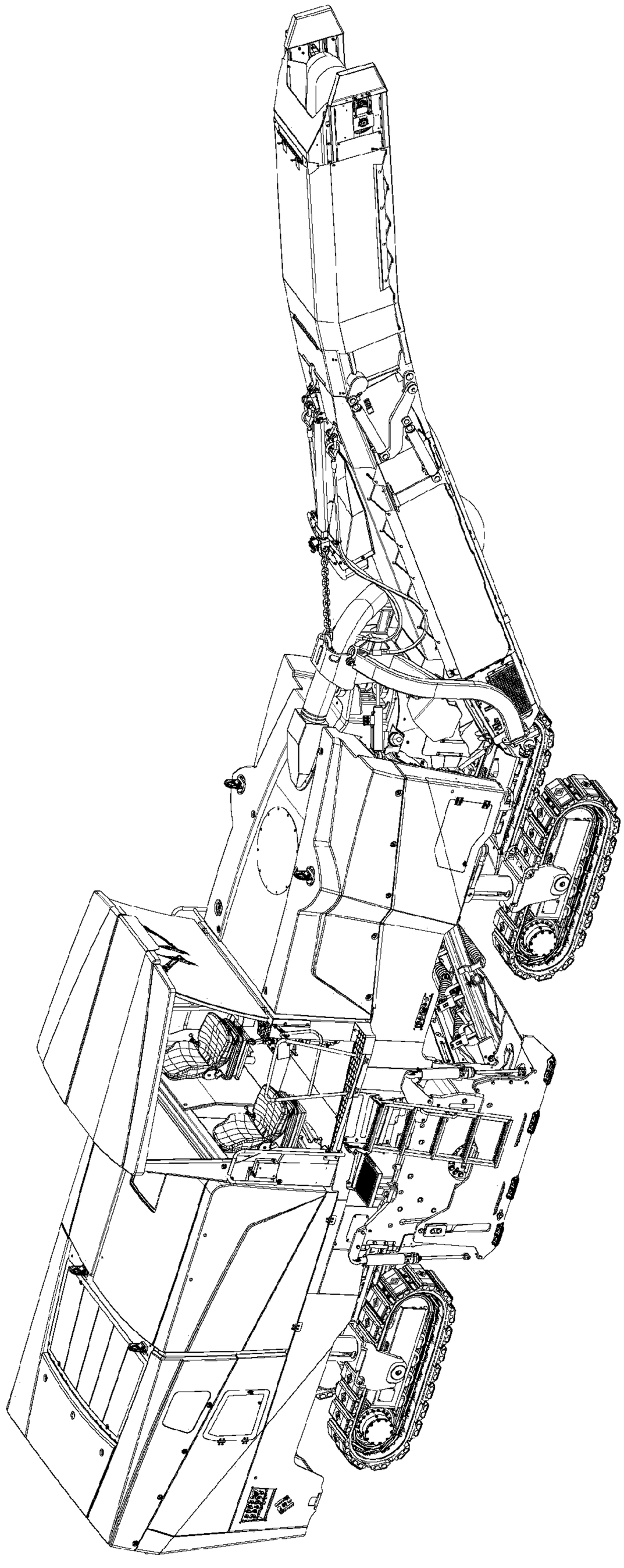

FIG. 9

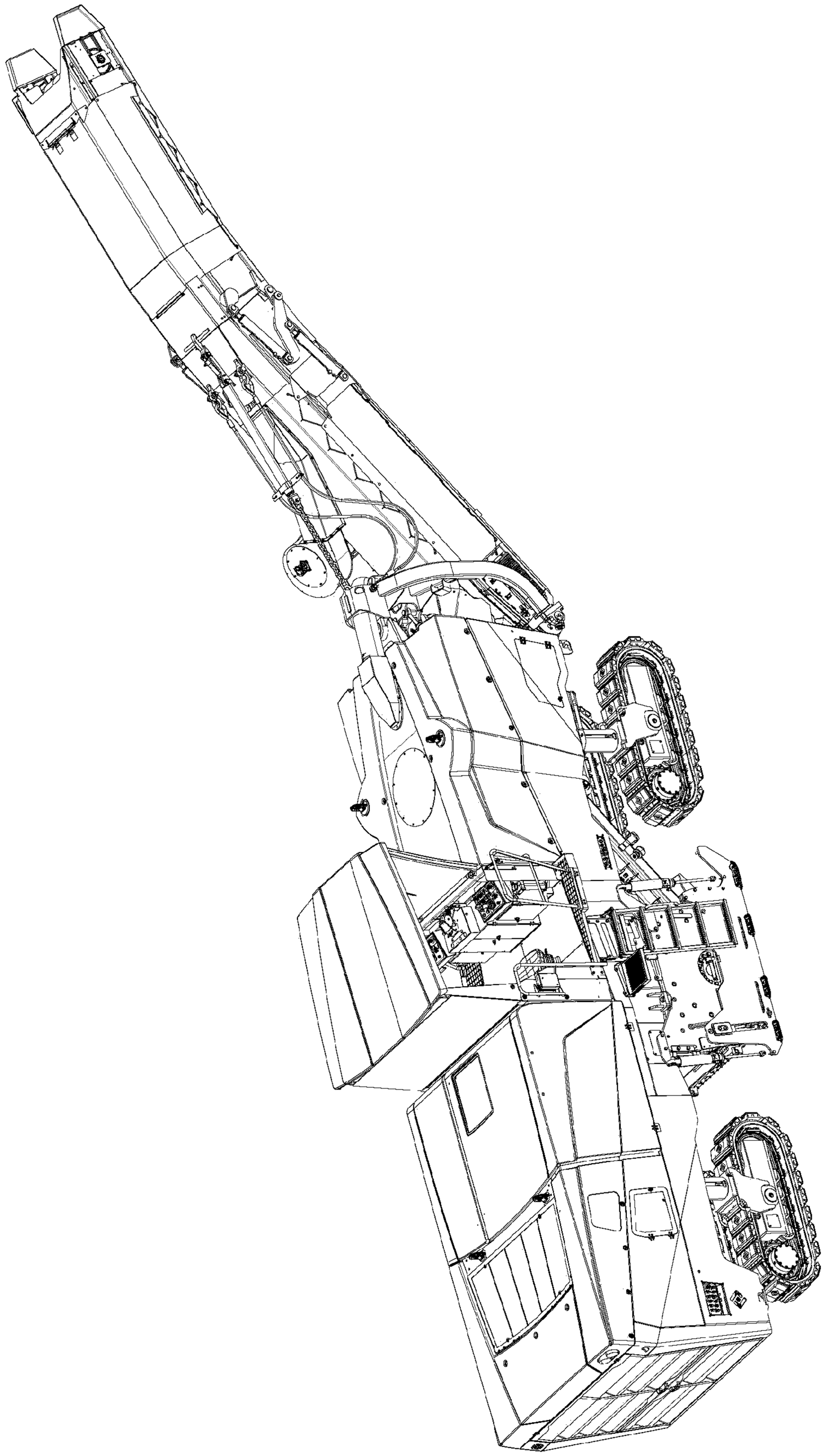

FIG. 10

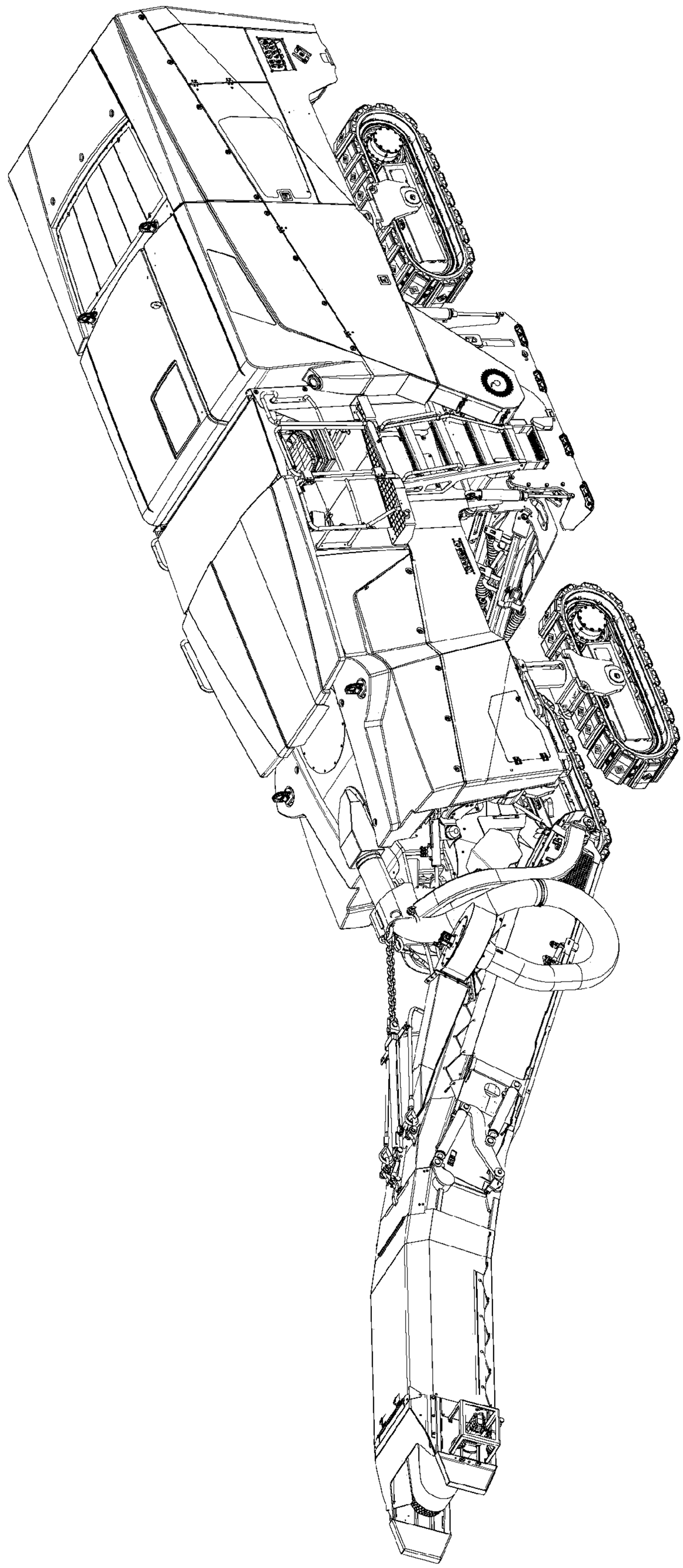

FIG. 11

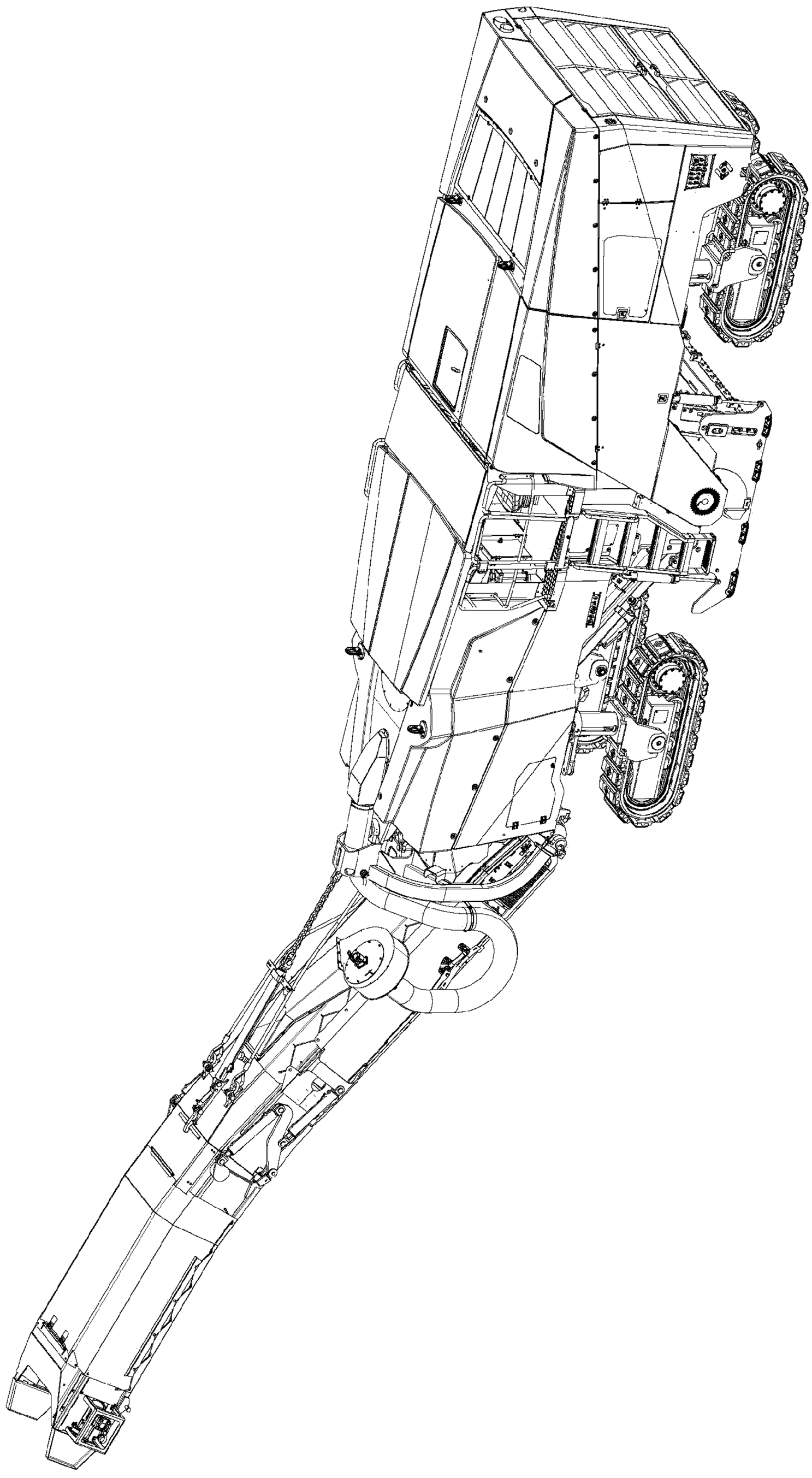

FIG. 12

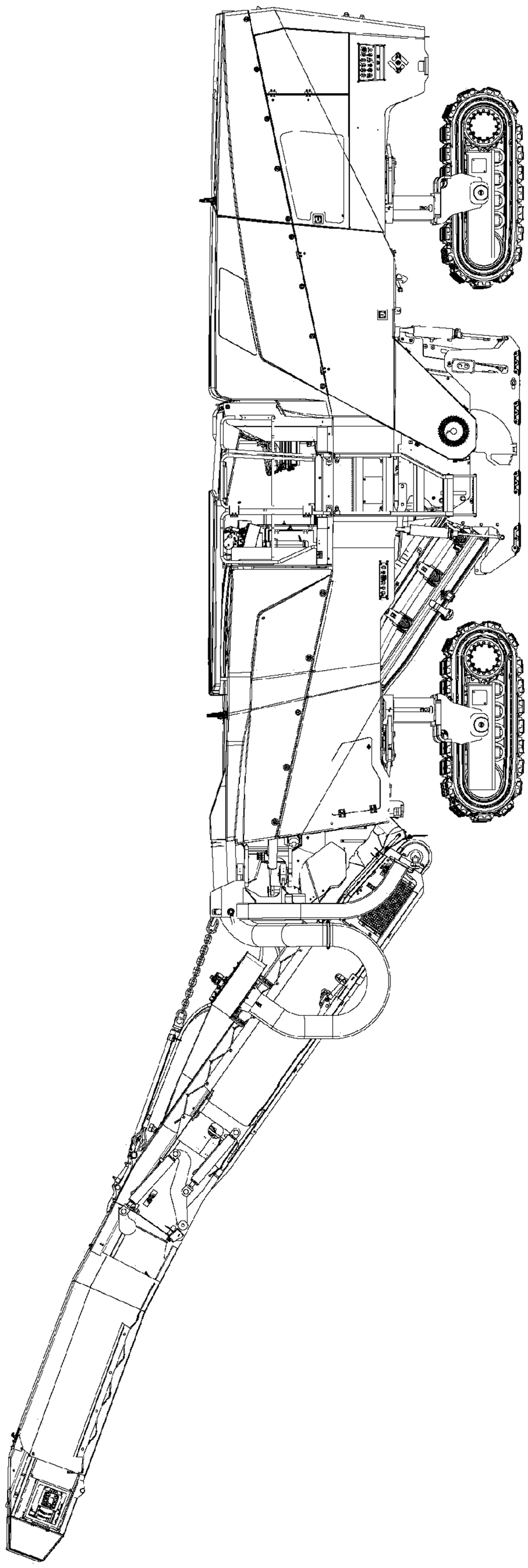

FIG. 13