US00D755087S

(12) United States Design Patent

Bodman et al.

(10) Patent No.: US D755,087 S
(45) Date of Patent: ** May 3, 2016

(54) **WHEELCHAIR RIGIDIZER**

(71) Applicant: **MOBB Medical Ltd.**, Concord (CA)

(72) Inventors: **Moshe Bodman**, Concord (CA); **Philip Wilcox**, Concord (CA)

(73) Assignee: **MOBB Medical Ltd.**, Concord (CA)

(**) Term: **14 Years**

(21) Appl. No.: **29/509,197**

(22) Filed: **Nov. 14, 2014**

(51) **LOC (10) Cl.** **12-12**

(52) **U.S. Cl.**
USPC **D12/133**

(58) **Field of Classification Search**
USPC D12/128–133
CPC A61G 2005/1045; A61G 2005/1091; A61G 2005/0891; A61G 5/1043; A61G 5/00–5/14; A61G 7/05715
See application file for complete search history.

(56) **References Cited**

U.S. PATENT DOCUMENTS

4,646,374 A * 3/1987 Shafer A47C 7/021 297/DIG. 4
5,839,140 A * 11/1998 Wilkerson A61G 5/1043 5/653
5,933,891 A * 8/1999 Nachod, III A61G 5/1043 297/452.24
6,241,320 B1 * 6/2001 Chew A47C 7/021 297/452.26
6,460,933 B1 * 10/2002 Bors A61G 5/1067 297/284.9
6,502,263 B1 * 1/2003 Rowley A47C 7/021 297/452.25
6,598,251 B2 * 7/2003 Habboub B60N 2/56 297/452.42
7,854,481 B2 * 12/2010 Fraser A61G 5/08 297/440.2
7,946,654 B2 * 5/2011 Tsuber A47C 4/54 297/452.21
D650,214 S * 12/2011 Klotz D6/601
8,991,933 B2 * 3/2015 Johansson A61G 5/1062 297/284.8

* cited by examiner

Primary Examiner — Susan Bennett Hattan
Assistant Examiner — Charles Hanson
(74) *Attorney, Agent, or Firm* — Gilbert's LLP; Matthew D. Powell

(57) **CLAIM**

The ornamental design for a wheelchair rigidizer, as shown and described.

DESCRIPTION

FIG. **1** is top isometric view of the wheelchair rigidizer, in accordance with the design;
FIG. **2** is bottom isometric view of the wheelchair rigidizer of FIG. **1**;
FIG. **3** is top view of the wheelchair rigidizer of FIG. **1**;
FIG. **4** is a bottom view of the wheelchair rigidizer of FIG. **1**;
FIG. **5** is a front view of the wheelchair rigidizer of FIG. **1**;
FIG. **6** is a back view of the wheelchair rigidizer of FIG. **1**;
FIG. **7** is a left side view of the wheelchair rigidizer of FIG. **1**;
FIG. **8** is a right side view of the wheelchair rigidizer of FIG. **1**;
FIG. **9** is a top isometric view of an alternative embodiment of the wheelchair rigidizer, in accordance with the design;
FIG. **10** is a bottom isometric view of the wheelchair rigidizer of FIG. **9**;
FIG. **11** is a top view of the wheelchair rigidizer of FIG. **9**;
FIG. **12** is a bottom view of the wheelchair rigidizer of FIG. **9**;
FIG. **13** is a front view of the wheelchair rigidizer of FIG. **9**;
FIG. **14** is a back view of the wheelchair rigidizer of FIG. **9**;
FIG. **15** is a left side view of the wheelchair rigidizer of FIG. **9**; and,
FIG. **16** is a right side view of the wheelchair rigidizer of FIG. **9**.

1 Claim, 12 Drawing Sheets

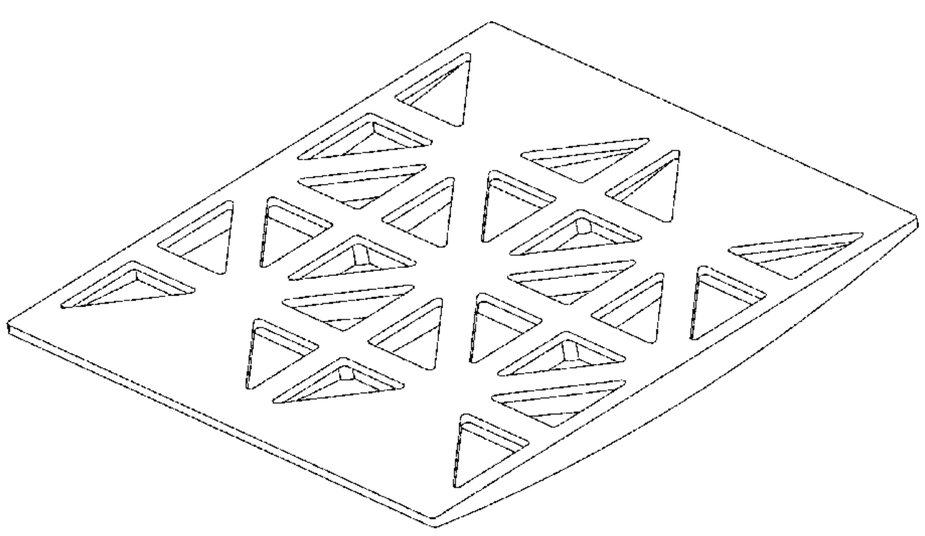

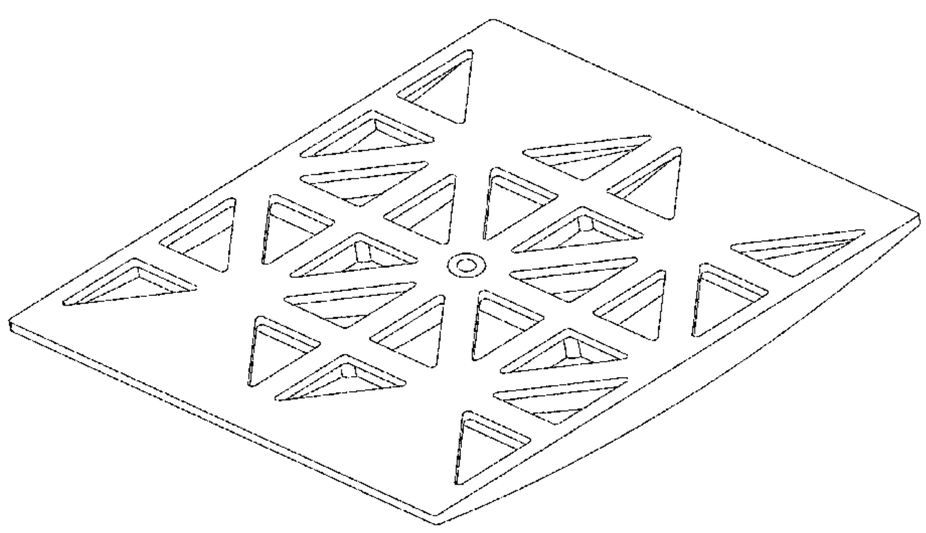

FIG.1

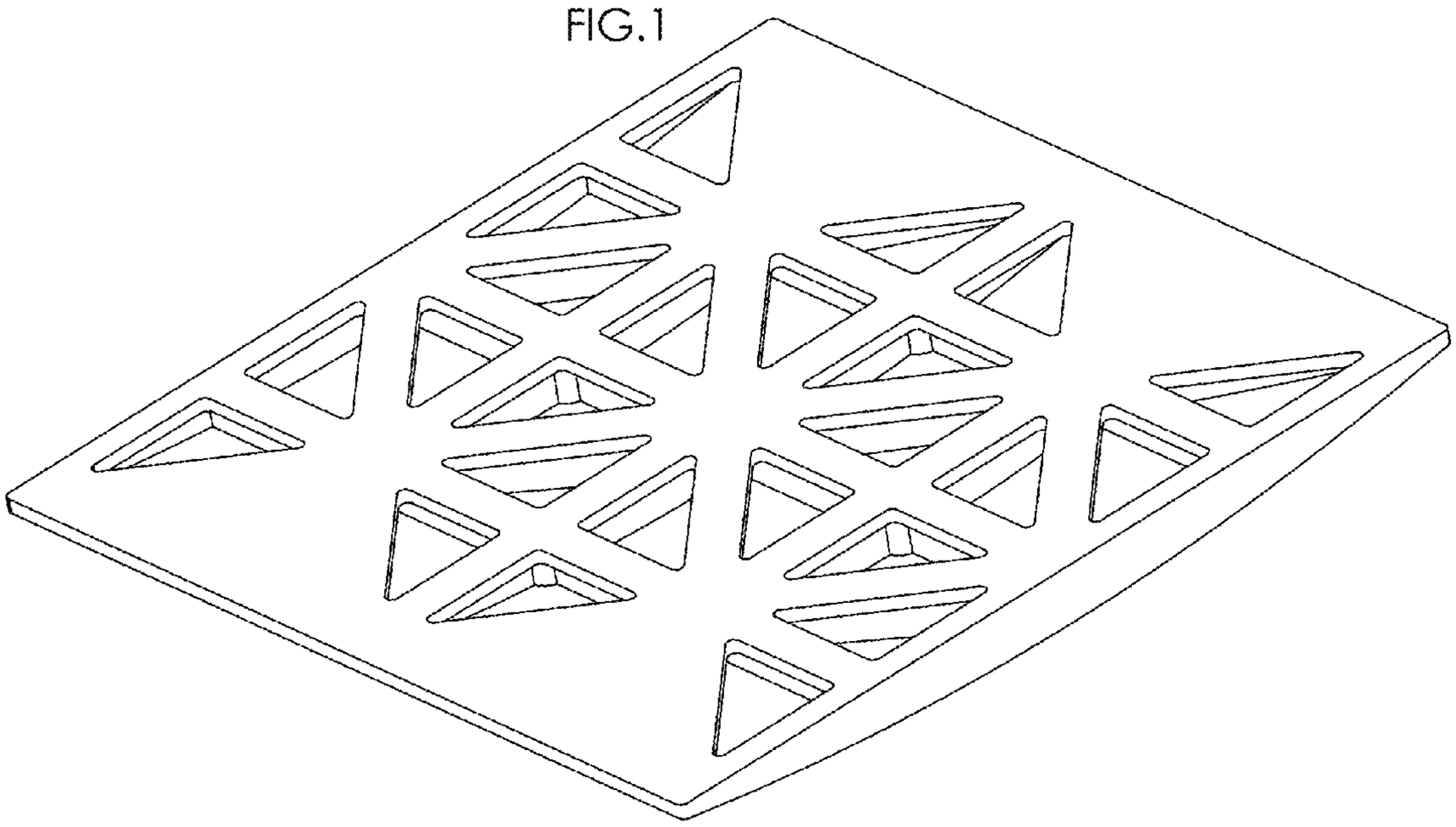

FIG. 2

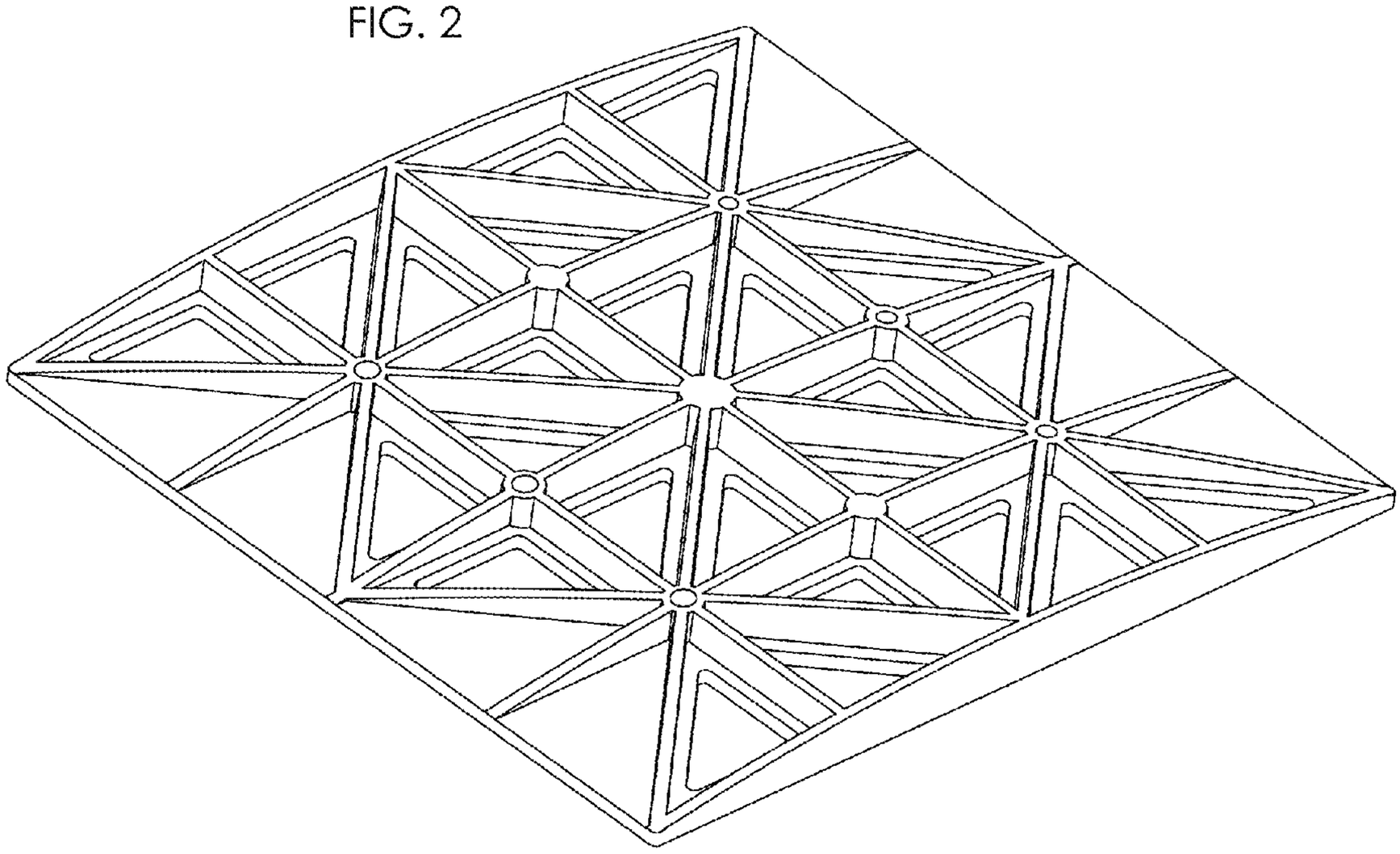

FIG.3

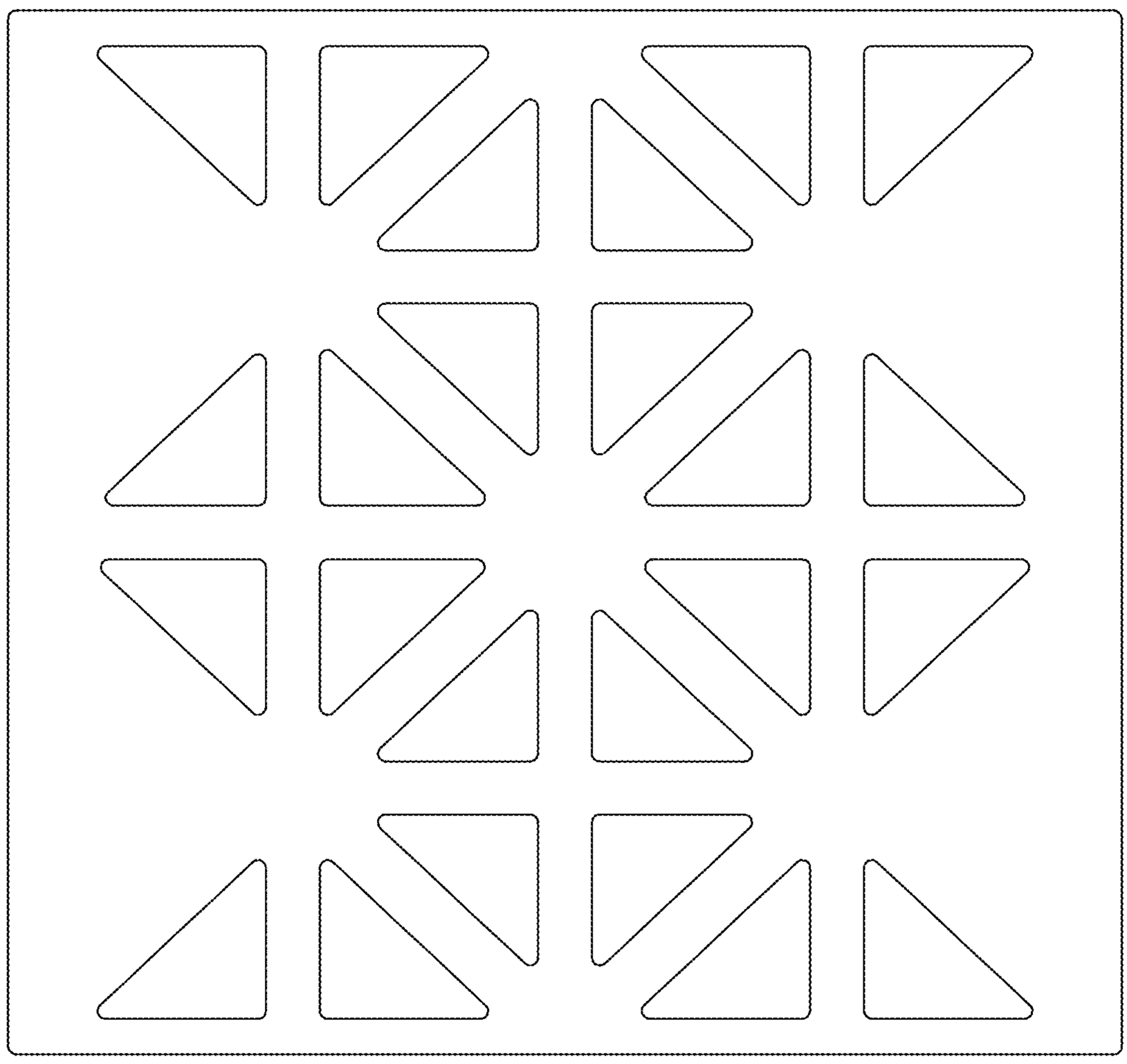

FIG.4

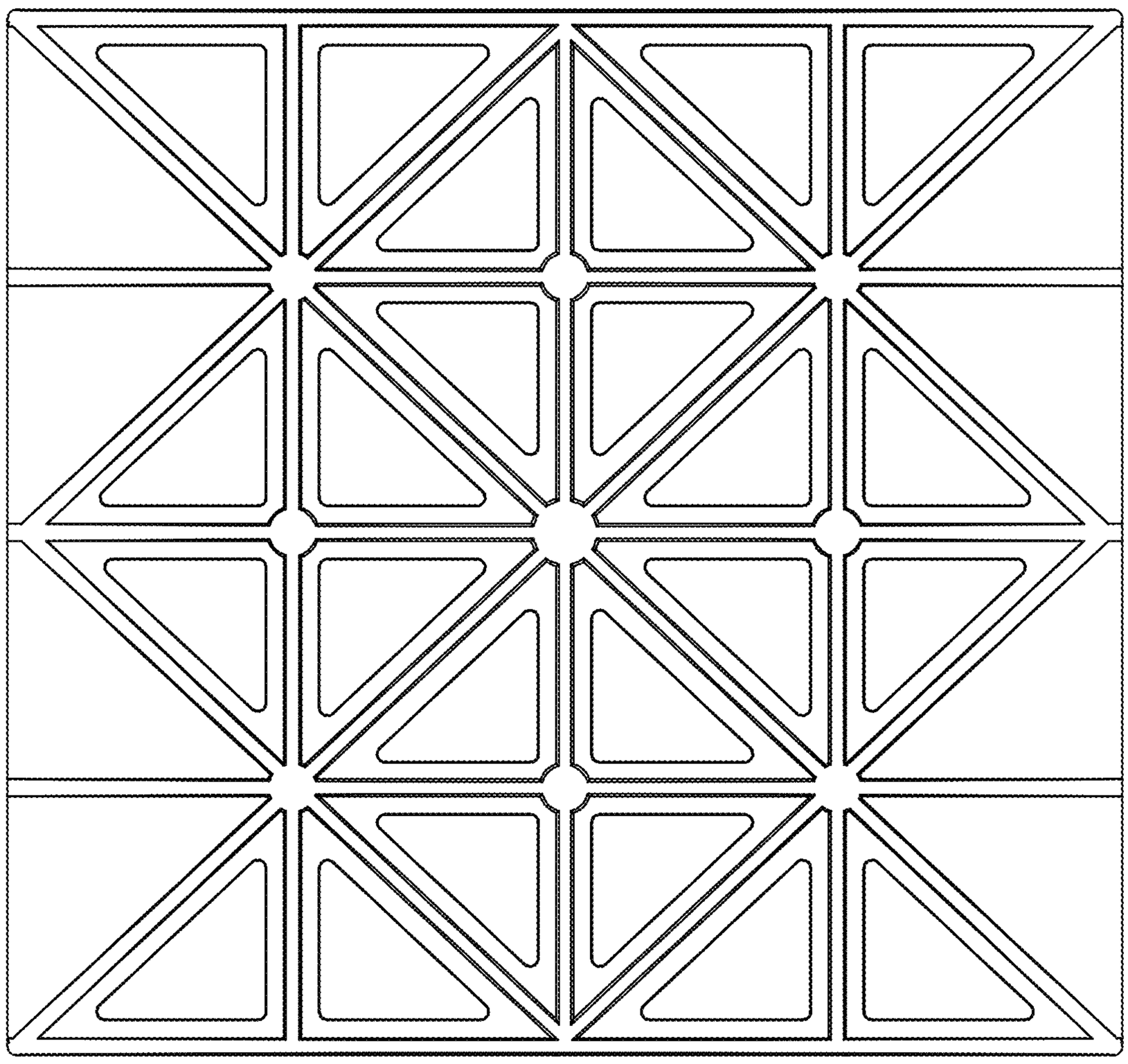

FIG. 5

FIG. 6

FIG.7

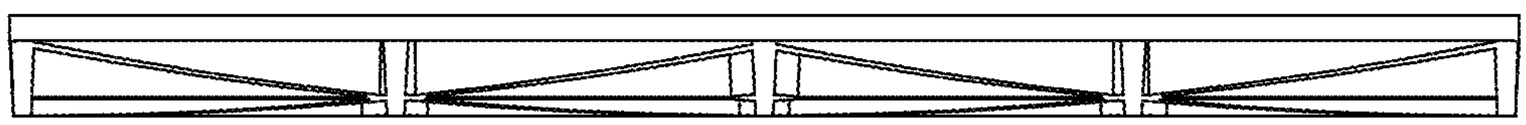

FIG.8

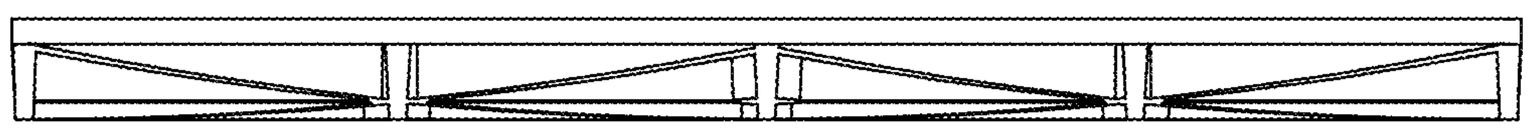

FIG. 9

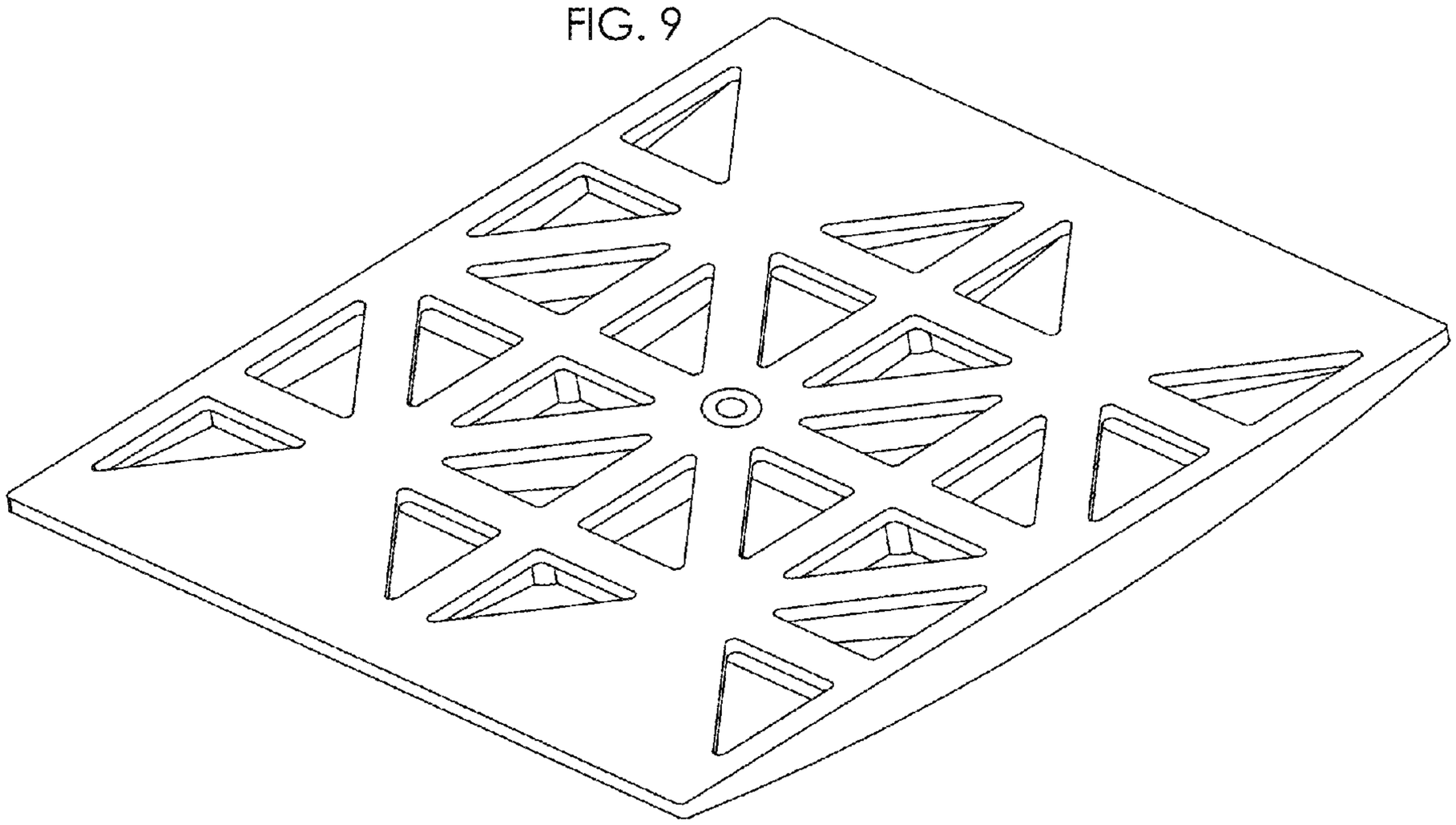

FIG. 10

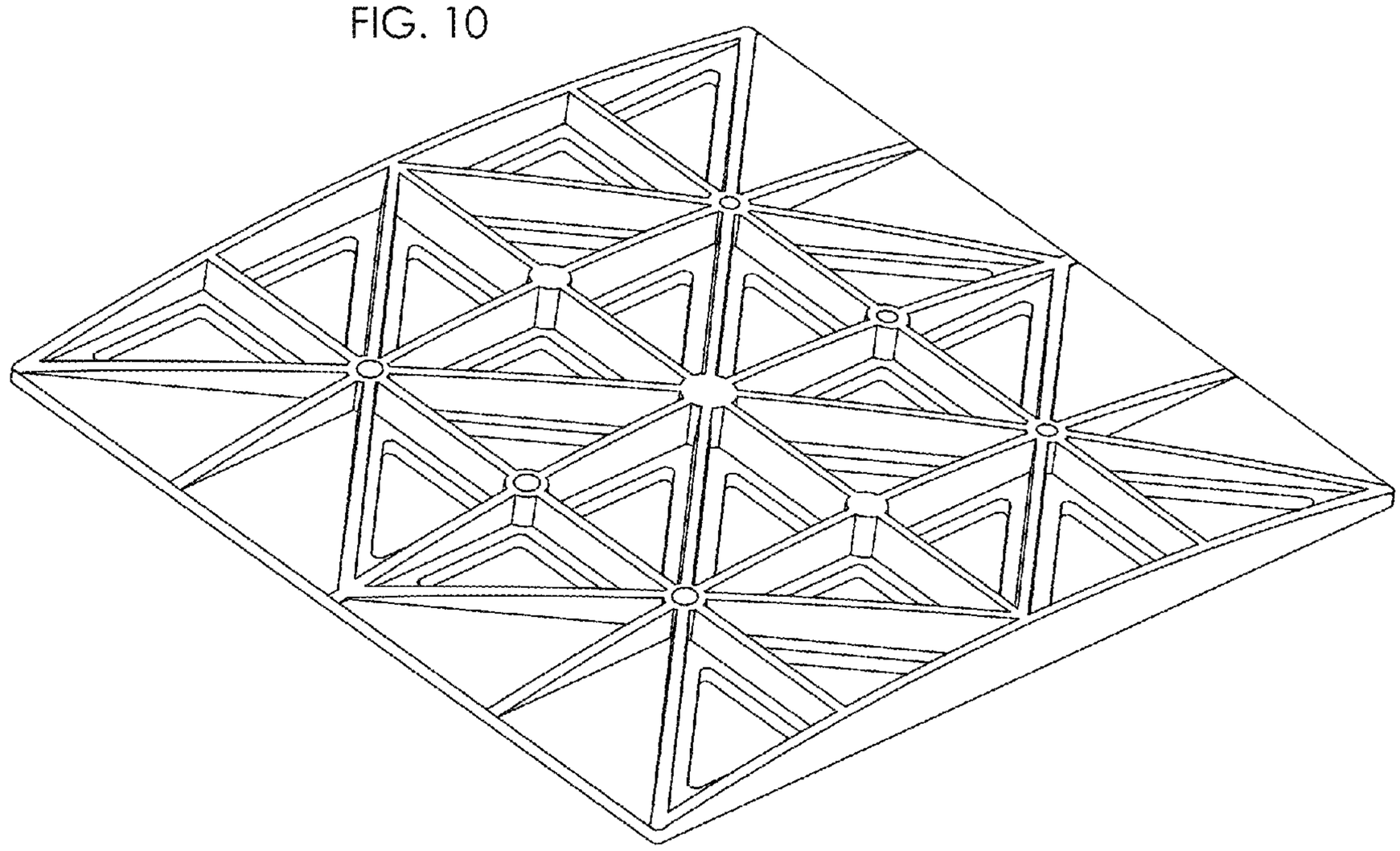

FIG. 11

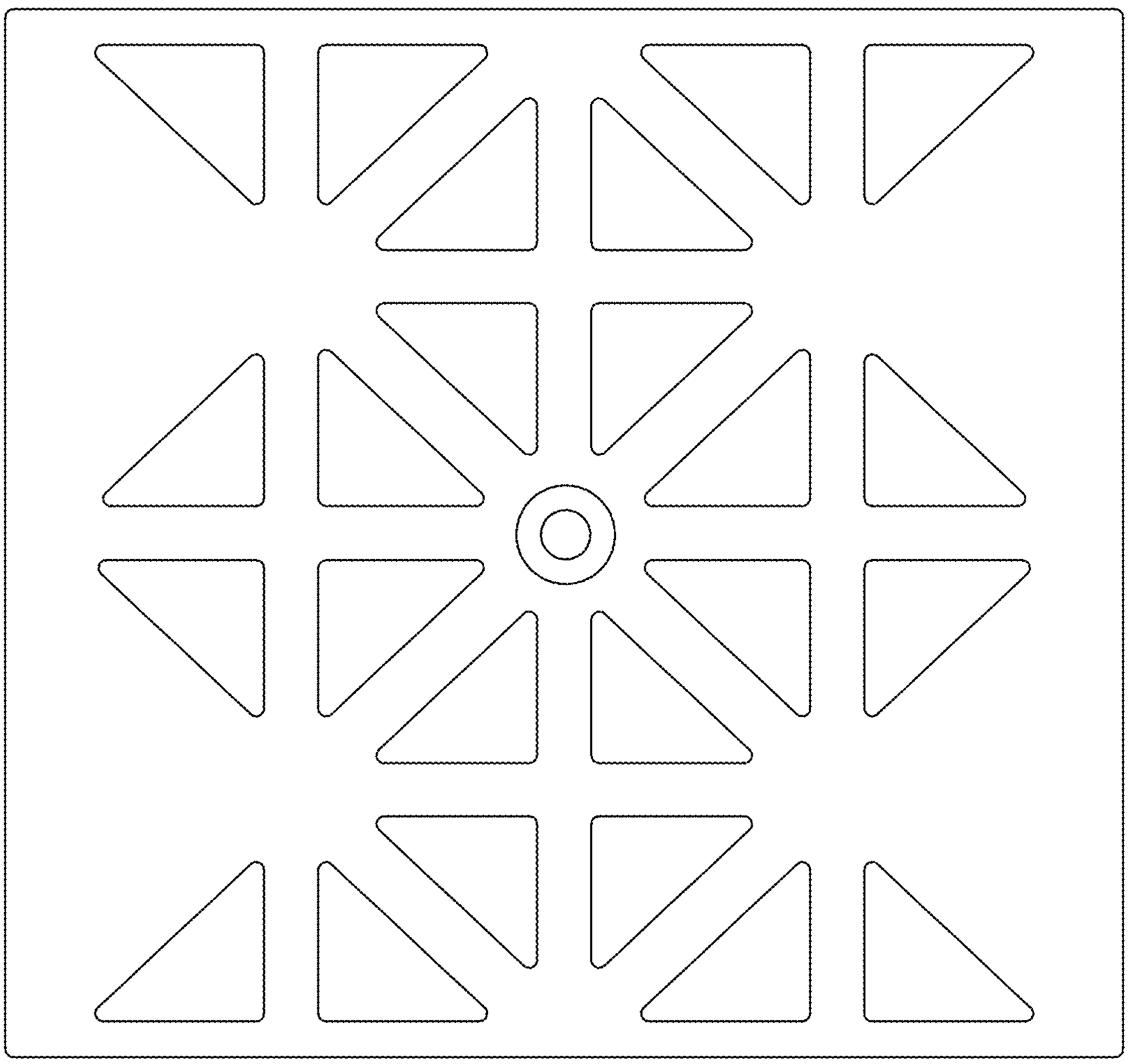

FIG. 12

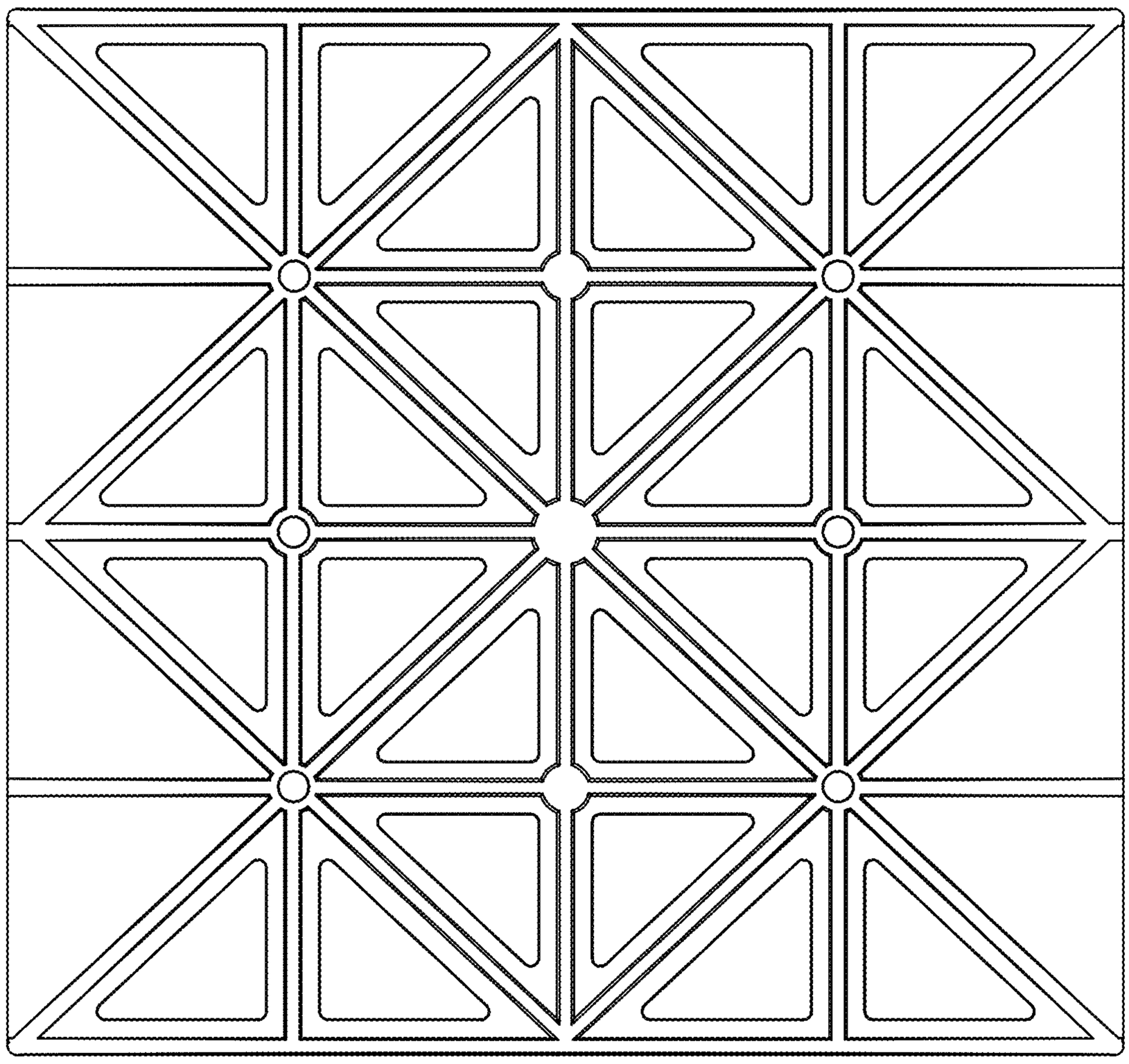

FIG. 13

FIG. 14

FIG. 15

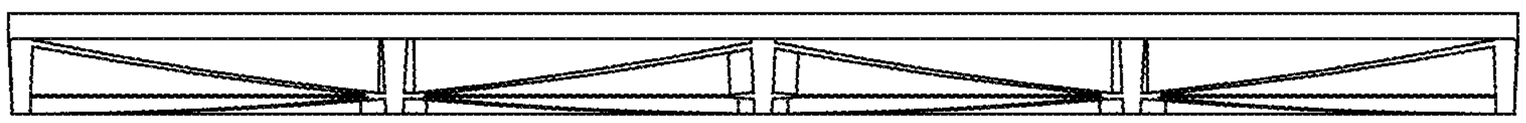
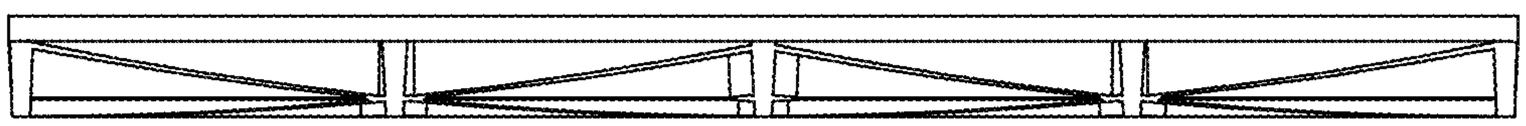
FIG. 16