US00D753976S

(12) United States Design Patent
Kalinowski

(10) Patent No.: US D753,976 S
(45) Date of Patent: ** Apr. 19, 2016

(54) **SCREW GUN**

(71) Applicant: **Robert Bosch GmbH**, Stuttgart (DE)

(72) Inventor: **Petra Kalinowski**, Eislingen/Fils (DE)

(73) Assignee: **Robert Bosch GmbH**, Stuttgart (DE)

(**) Term: **14 Years**

(21) Appl. No.: **29/496,757**

(22) Filed: **Jul. 16, 2014**

(30) **Foreign Application Priority Data**

Jan. 20, 2014 (EM) 002387217

(51) **LOC (10) Cl.** **08-03**

(52) **U.S. Cl.**
USPC **D8/68**

(58) **Field of Classification Search**
USPC D8/61, 67, 68; 81/57.4, 489; 173/48, 173/109, 170, 178, 217; 408/124, 125; 362/119; 475/149
CPC B62D 23/005; B62D 29/00; B62D 29/043; B62D 31/00; B62D 33/046; B62D 35/00; B62D 35/001; B60Q 1/0005
See application file for complete search history.

(56) **References Cited**

U.S. PATENT DOCUMENTS

D337,038 S * 7/1993 Sakamoto et al. D8/68
D345,090 S * 3/1994 Okumura D8/68
D402,872 S * 12/1998 Clowers et al. D8/68
D406,740 S * 3/1999 Zurwelle D8/68
D467,481 S * 12/2002 Watson D8/68
D470,028 S * 2/2003 Cooper D8/68
D534,405 S * 1/2007 Concari D8/68
D647,774 S * 11/2011 Okuda et al. D8/68
D647,775 S * 11/2011 Toszegi D8/68
8,261,853 B2 * 9/2012 Hachisuka 173/170
8,714,282 B2 * 5/2014 Chen et al. 173/217
2004/0011544 A1 * 1/2004 Cooper et al. 173/217
2006/0011367 A1 * 1/2006 Teng et al. 173/217

OTHER PUBLICATIONS

"6807 2-Speed Extra Heavy Duty Screwdriver." Makita Brochure., May 8, 2013 [online], [retrieved on Aug. 8, 2015]. Retrieved from the Internet <URL: http://www.makita.co.za/6807.pdf>.*

(Continued)

Primary Examiner — Philip S Hyder
Assistant Examiner — Darlington Ly
(74) *Attorney, Agent, or Firm* — Maginot, Moore & Beck LLP

(57) **CLAIM**

The ornamental design for a screw gun, as shown and described.

DESCRIPTION

FIG. **1** is a perspective view of a screw gun showing my new design;
FIG. **2** is a right side elevational view showing the design for the screw gun of FIG. **1**;
FIG. **3** is a left side elevational view showing the design for the screw gun of FIG. **1**;
FIG. **4** is a front elevational view showing the design for the screw gun of FIG. **1**;
FIG. **5** is a rear elevational view showing the design for the screw gun of FIG. **1**;
FIG. **6** is a top plan view showing the design for the screw gun of FIG. **1**; and,
FIG. **7** is a bottom plan view showing the design for the screw gun of FIG. **1**.
The broken lines shown in the drawings illustrate features of the screw gun that form no part of the claimed design.

1 Claim, 7 Drawing Sheets

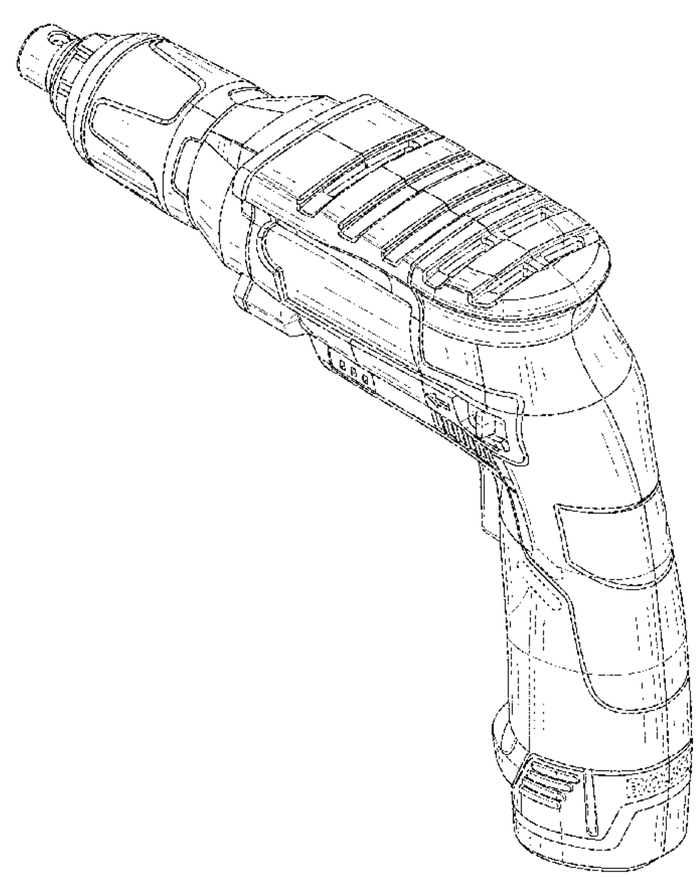

(56) **References Cited**

OTHER PUBLICATIONS

Stuart. "New Dewalt 20V Brushless Drywall Screwgun." Tool Guyd., Jul. 18, 2014 [online], [retrieved on Aug. 8, 2015]. Retrieved from the Internet <URL: http://toolguyd.com/dewalt-20v-brushless-drywall-screwgun/>.*

Frane, David. "DeWalt 20V Max Brushless Drywall Gun." Tools of the Trade. Nov. 14, 2014 [online], [retrieved on Aug. 8, 2015]. Retrieved from the Internet <URL: http://www.toolsofthetrade.net/cordless-tools/dewalt-20v-max-brushless-drywall-gun_o.aspx>.*

* cited by examiner

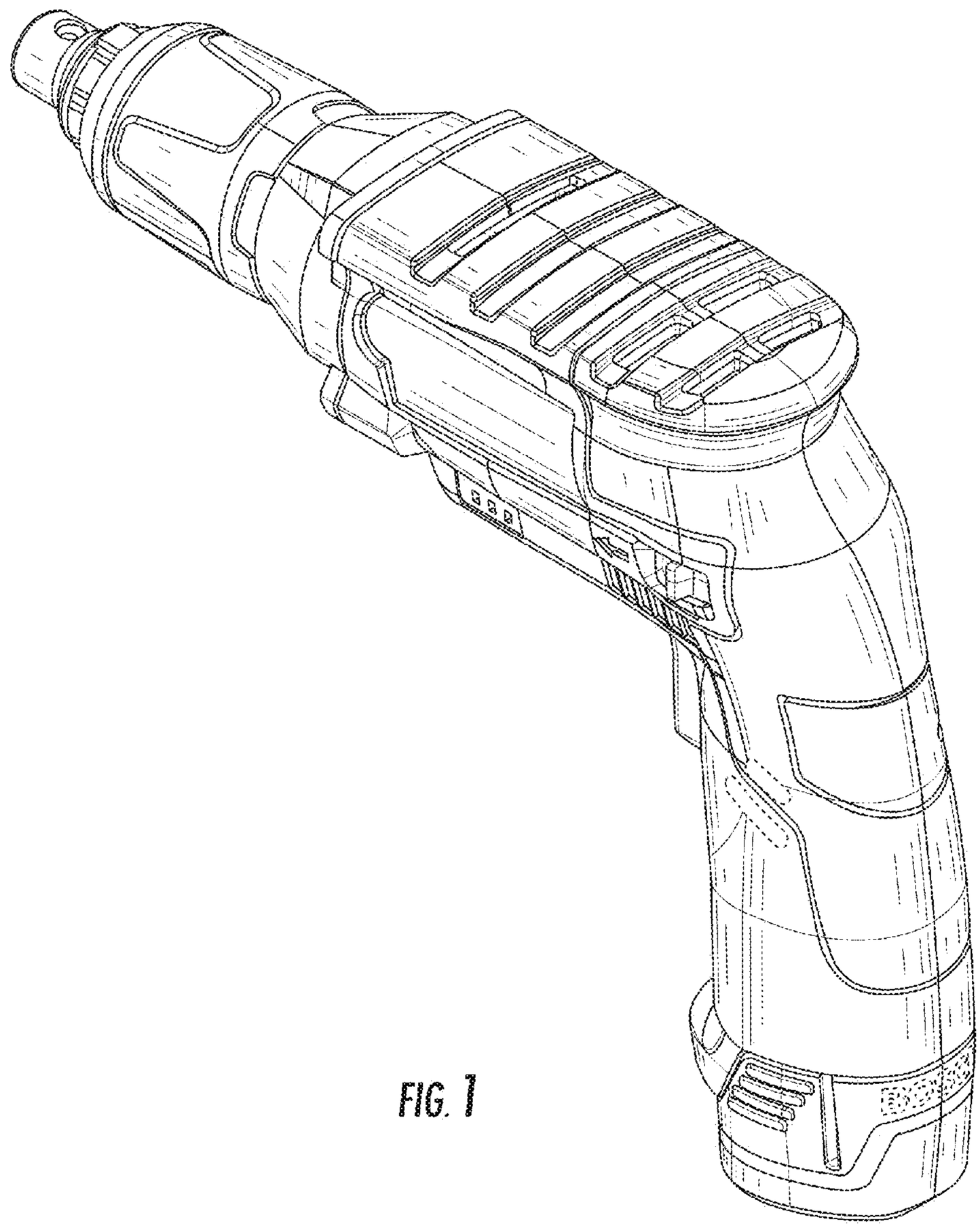

FIG. 1

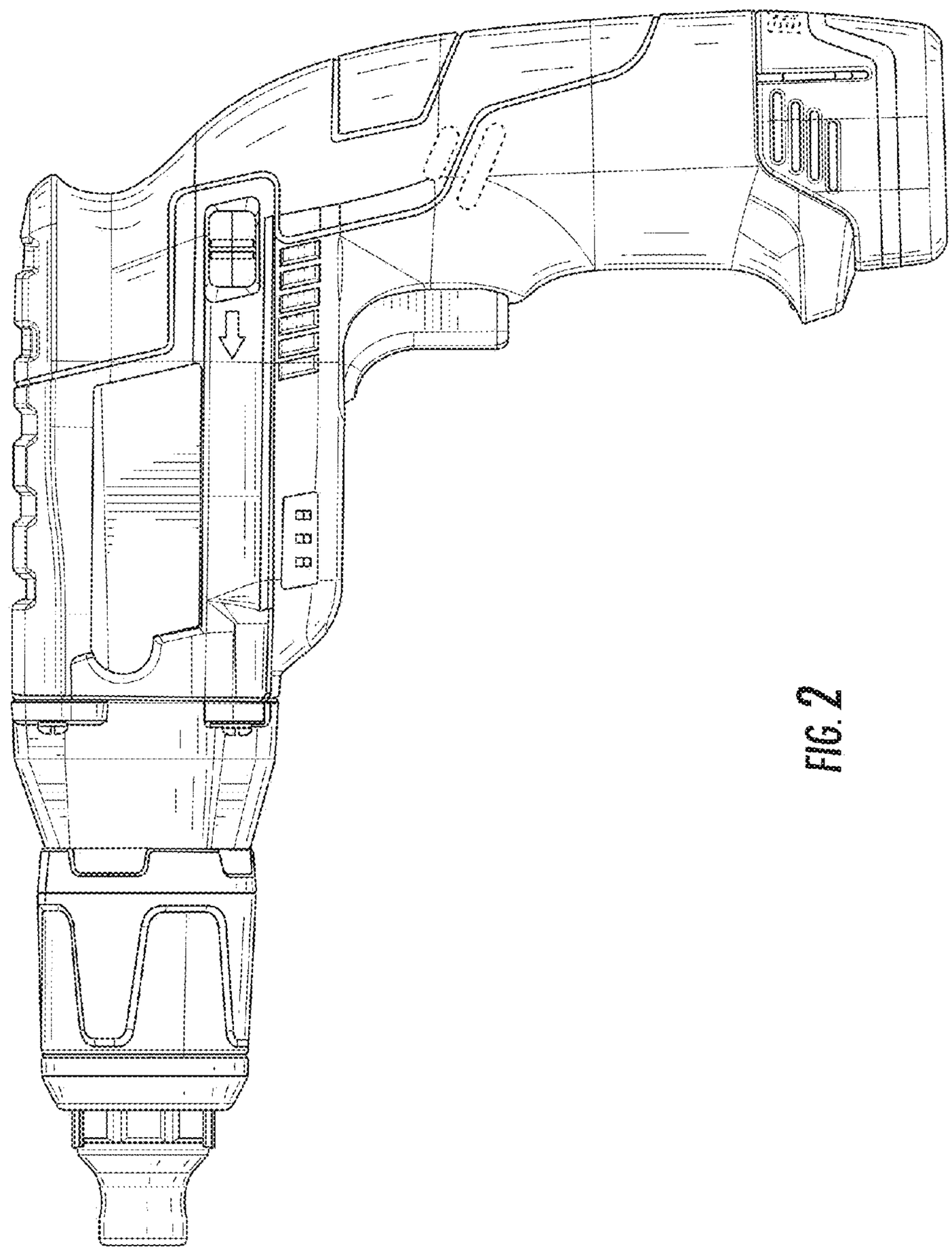

FIG. 2

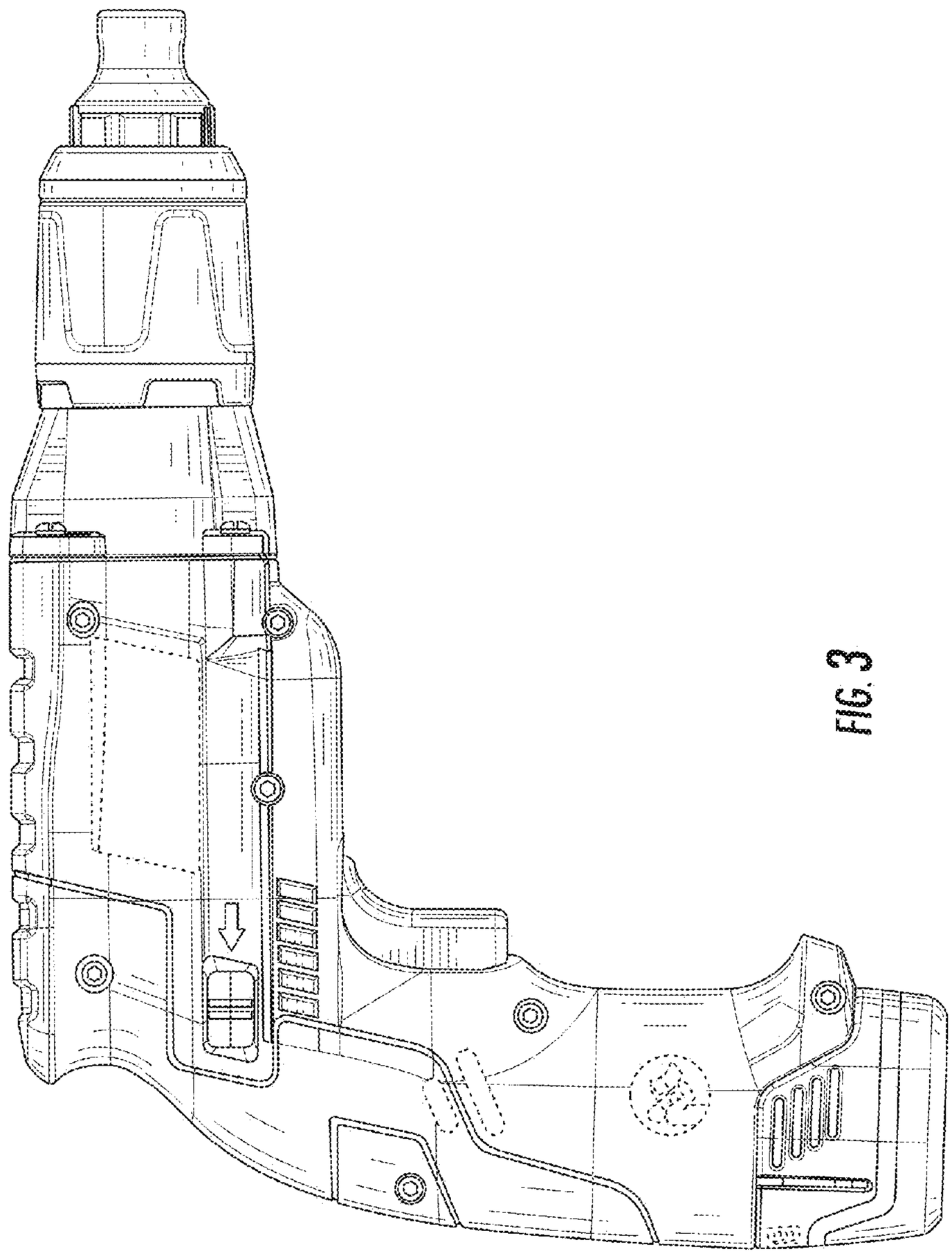

FIG. 3

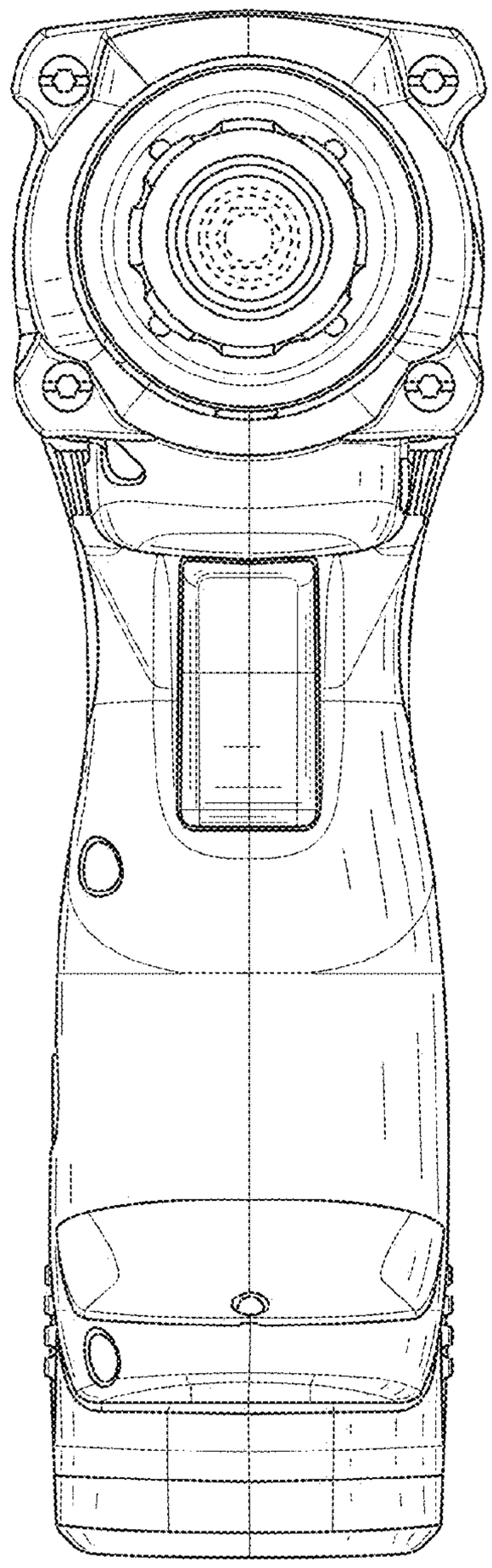

FIG. 4

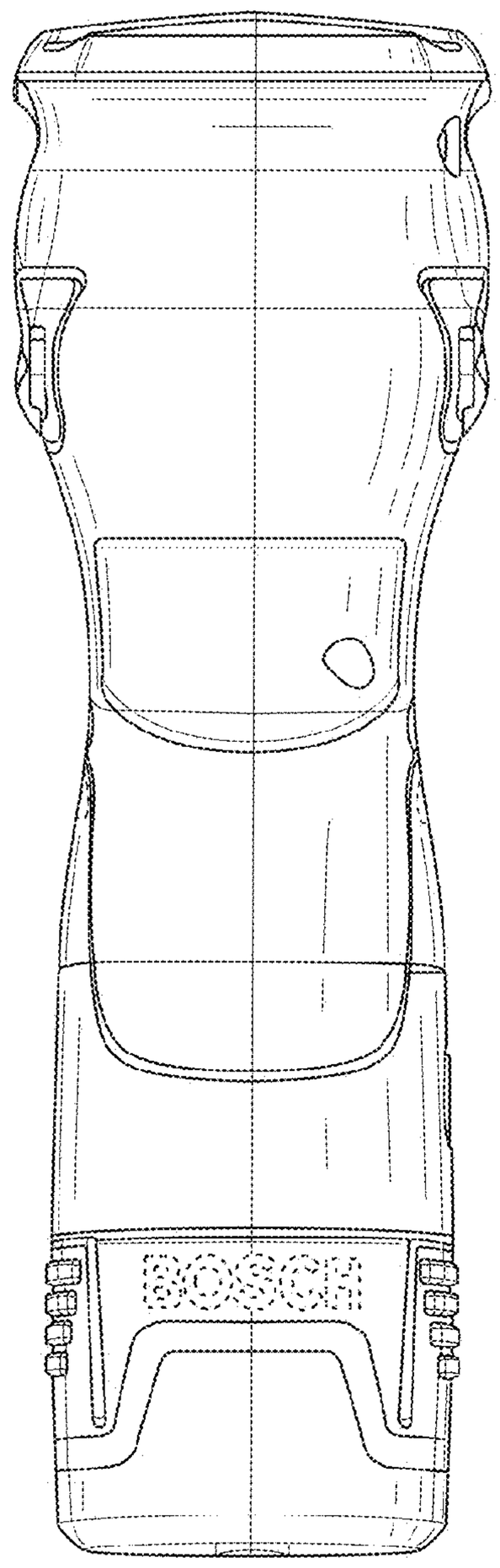

FIG. 5

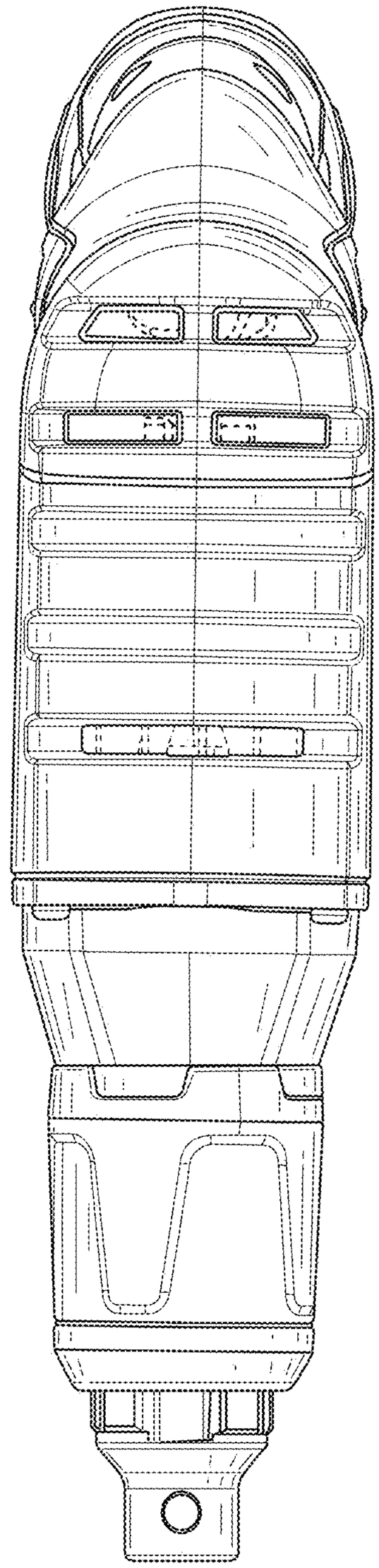

FIG. 6

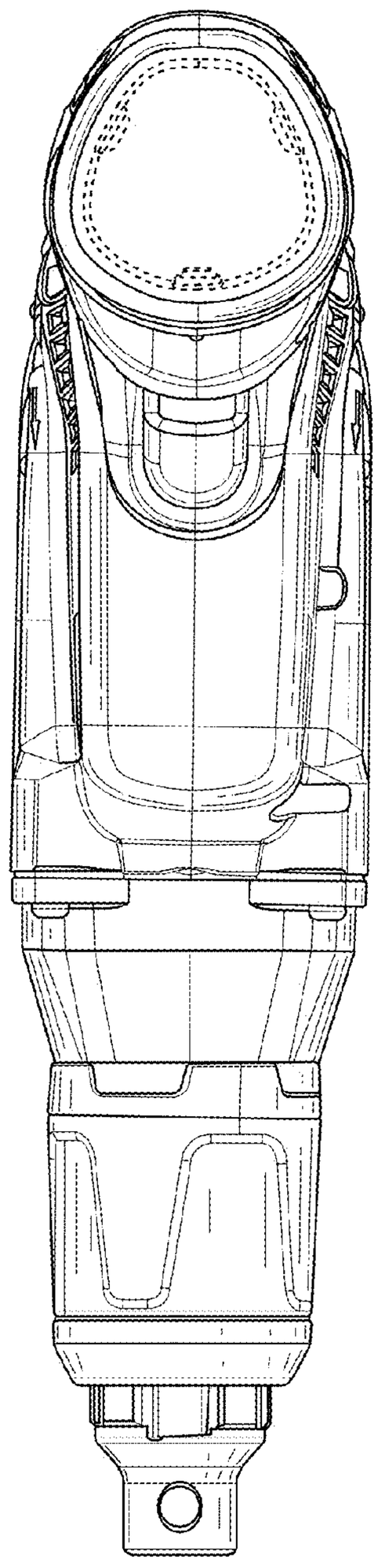

FIG. 7