US00D753437S

(12) United States Design Patent
Steel

(10) **Patent No.: US D753,437 S**
(45) **Date of Patent: ** *Apr. 12, 2016**

(54) **MUG**

(71) Applicant: **Jeffrey Steel**, Hoboken, NJ (US)

(72) Inventor: **Jeffrey Steel**, Hoboken, NJ (US)

(*) Notice: This patent is subject to a terminal disclaimer.

(**) Term: **14 Years**

(21) Appl. No.: **29/491,390**

(22) Filed: **May 20, 2014**

(51) **LOC (10) Cl.** **31-00**

(52) **U.S. Cl.**
USPC **D7/396.2**; D7/396.6; D7/509

(58) **Field of Classification Search**
USPC D7/507–515, 523, 531, 533, 538, 300.1, D7/300, 591, 596, 391, 396.1, 396.2, 414, D7/213, 400, 396.6, 900, 395, 631, 633; D9/516, 570, 651, 905, 552, 197, 435, D9/440; 220/703, 592.16, 592.17; 206/216, 217; D8/34; D23/335, 336, D23/262, 260
CPC A47G 19/22; A47G 19/2227; A47G 2019/225; A47G 19/2272; A47G 19/2288; A45F 3/20; B65D 1/265; A47J 43/27
See application file for complete search history.

(56) **References Cited**

U.S. PATENT DOCUMENTS

2,476,621	A	*	7/1949	Okress	333/254
2,781,650	A	*	2/1957	Lee	40/324
D289,143	S	*	4/1987	Guillaume	D9/501
D296,523	S	*	7/1988	Corno et al.	D9/435
4,765,465	A	*	8/1988	Yamada et al.	206/217
4,989,746	A	*	2/1991	Pierce	220/254.3
D318,321	S	*	7/1991	Wigle	D23/262
D440,134	S	*	4/2001	Brix-Hansen	D8/33
D502,052	S	*	2/2005	Meade	D7/396.2
D506,910	S	*	7/2005	Tham-itthisak	D8/34
D527,254	S	*	8/2006	Antonelli	D9/436
D543,658	S	*	5/2007	Angeletta	D28/7
D649,836	S	*	12/2011	Dooley et al.	D7/536
D659,497	S	*	5/2012	Blazevic	D8/34
D679,971	S	*	4/2013	Weyer et al.	D8/40
2002/0175169	A1	*	11/2002	Tham-itthisak	220/600
2005/0184137	A1	*	8/2005	Dorsey et al.	229/103
2006/0261170	A1	*	11/2006	Mooney et al.	235/486
2008/0237242	A1	*	10/2008	Gifford	220/592.16
2009/0080180	A1	*	3/2009	Bertken	362/101
2009/0255941	A1	*	10/2009	Kuntz	220/592.17
2010/0005828	A1	*	1/2010	Fedell	62/457.4
2010/0078432	A1	*	4/2010	Lin	220/23.91
2011/0114647	A1	*	5/2011	Hallberg	220/592.17
2013/0264340	A1	*	10/2013	Zens	220/8
2013/0341443	A1	*	12/2013	Stephenson	241/38
2014/0190966	A1	*	7/2014	Coloneri	220/203.01

* cited by examiner

Primary Examiner — Marianne Pandozzi
Assistant Examiner — Jae Liang
(74) *Attorney, Agent, or Firm* — Steven E. Shapiro

(57) **CLAIM**

The ornamental design for a mug, as shown and described.

DESCRIPTION

FIG. **1** is a top perspective view of a mug;
FIG. **2** is a front view of the mug;
FIG. **3** is a right side view of the mug;
FIG. **4** is a rear view of the mug;
FIG. **5** is a left side view of the mug;
FIG. **6** is a bottom view of the mug; and,
FIG. **7** is a bottom perspective view of the mug.
The broken lines in the figure drawings are included for the purpose of illustration and form no part of the claimed design.

1 Claim, 7 Drawing Sheets

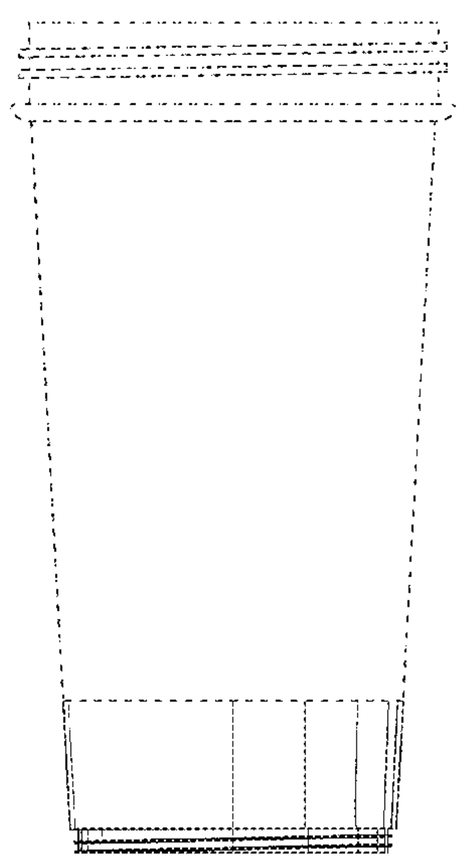

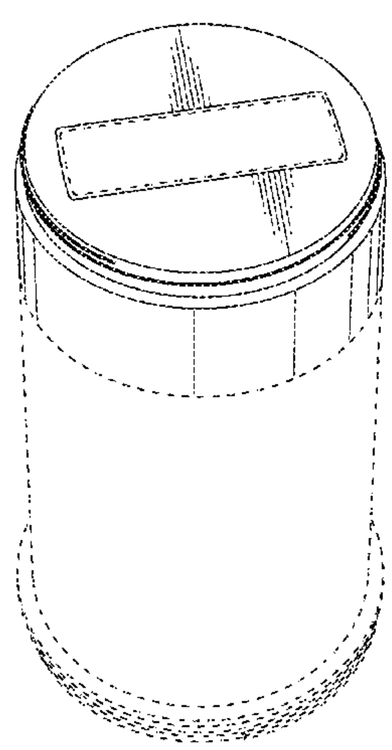

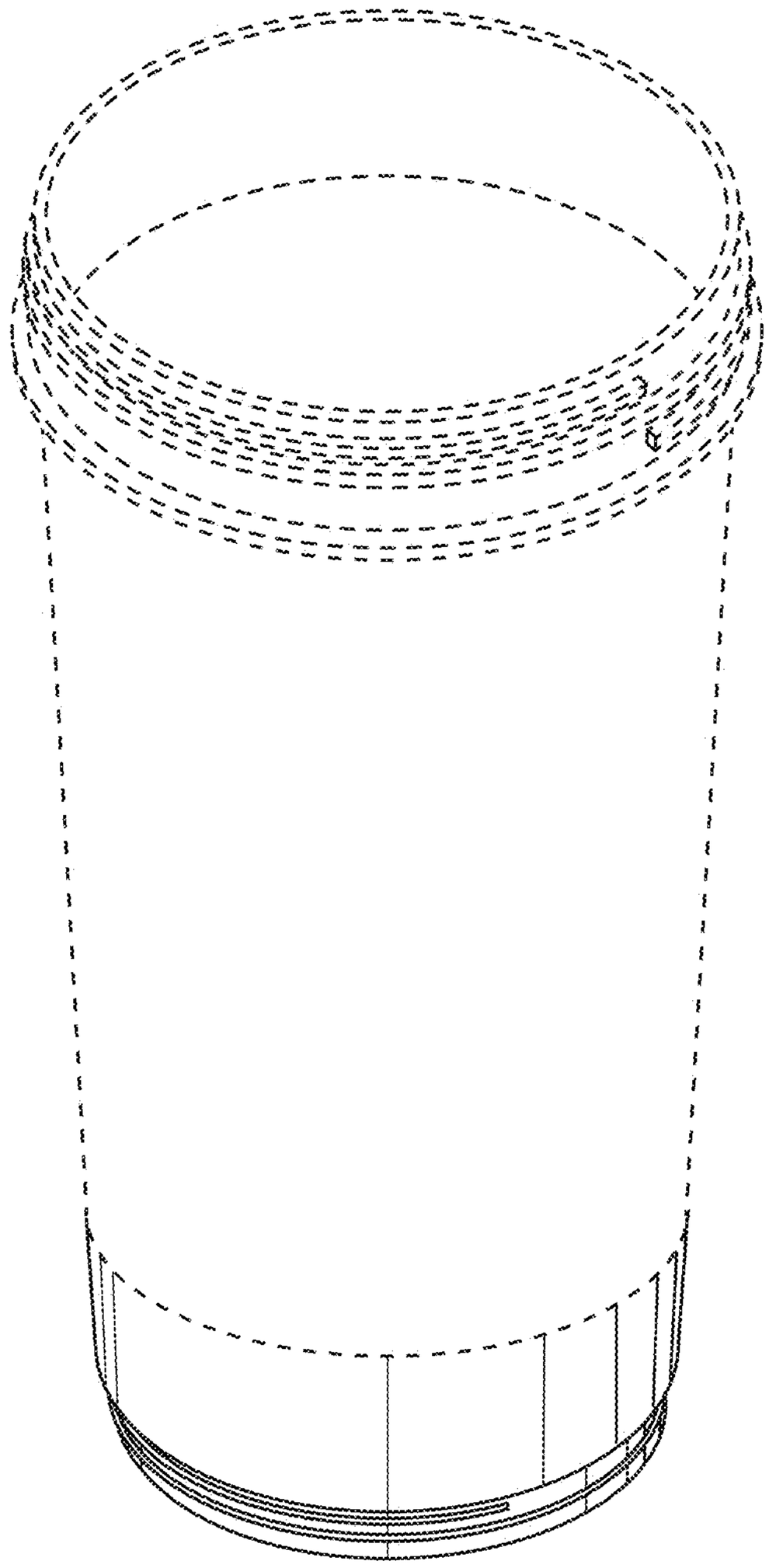

Fig. 1

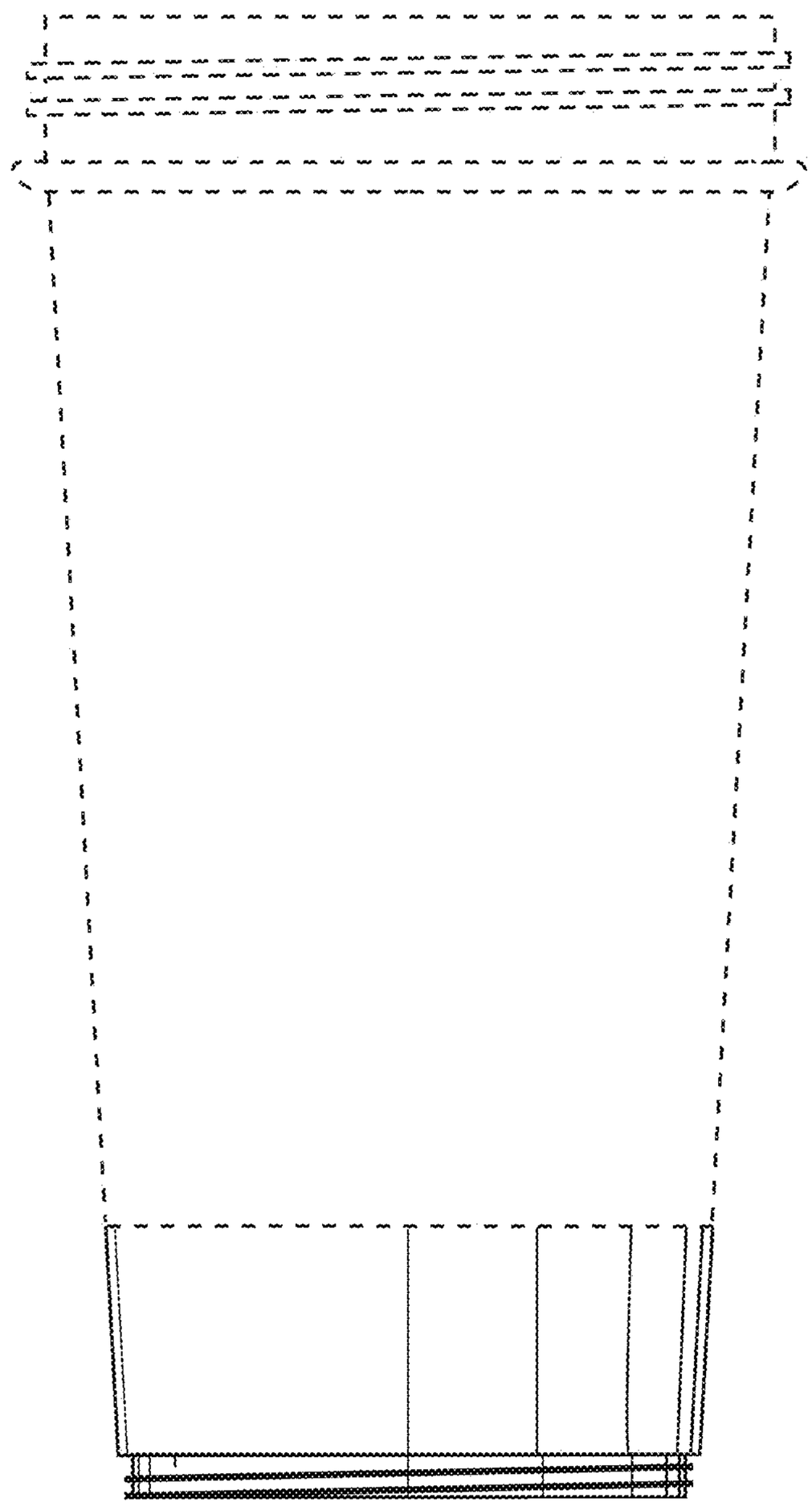

Fig. 2

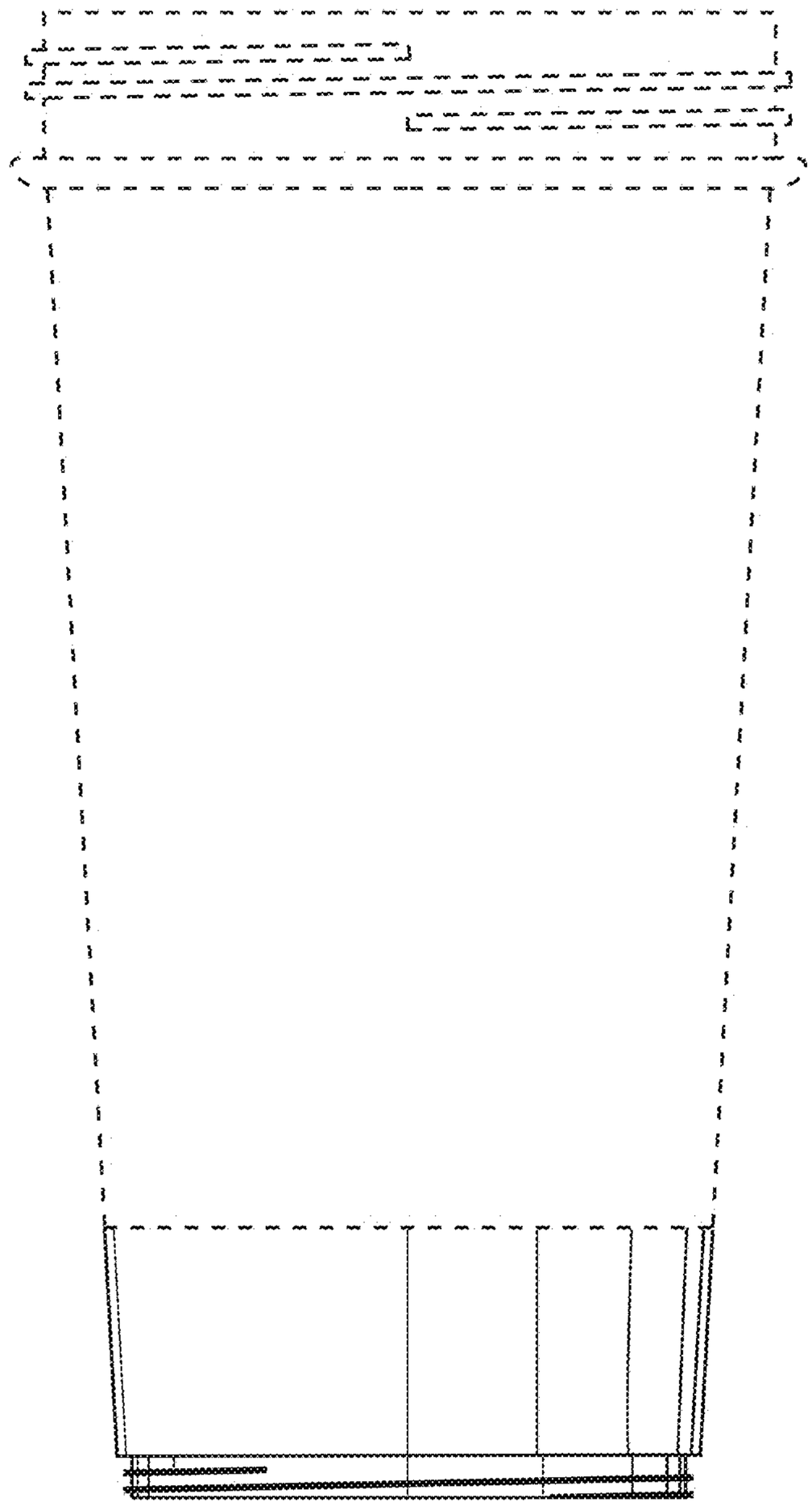

Fig. 3

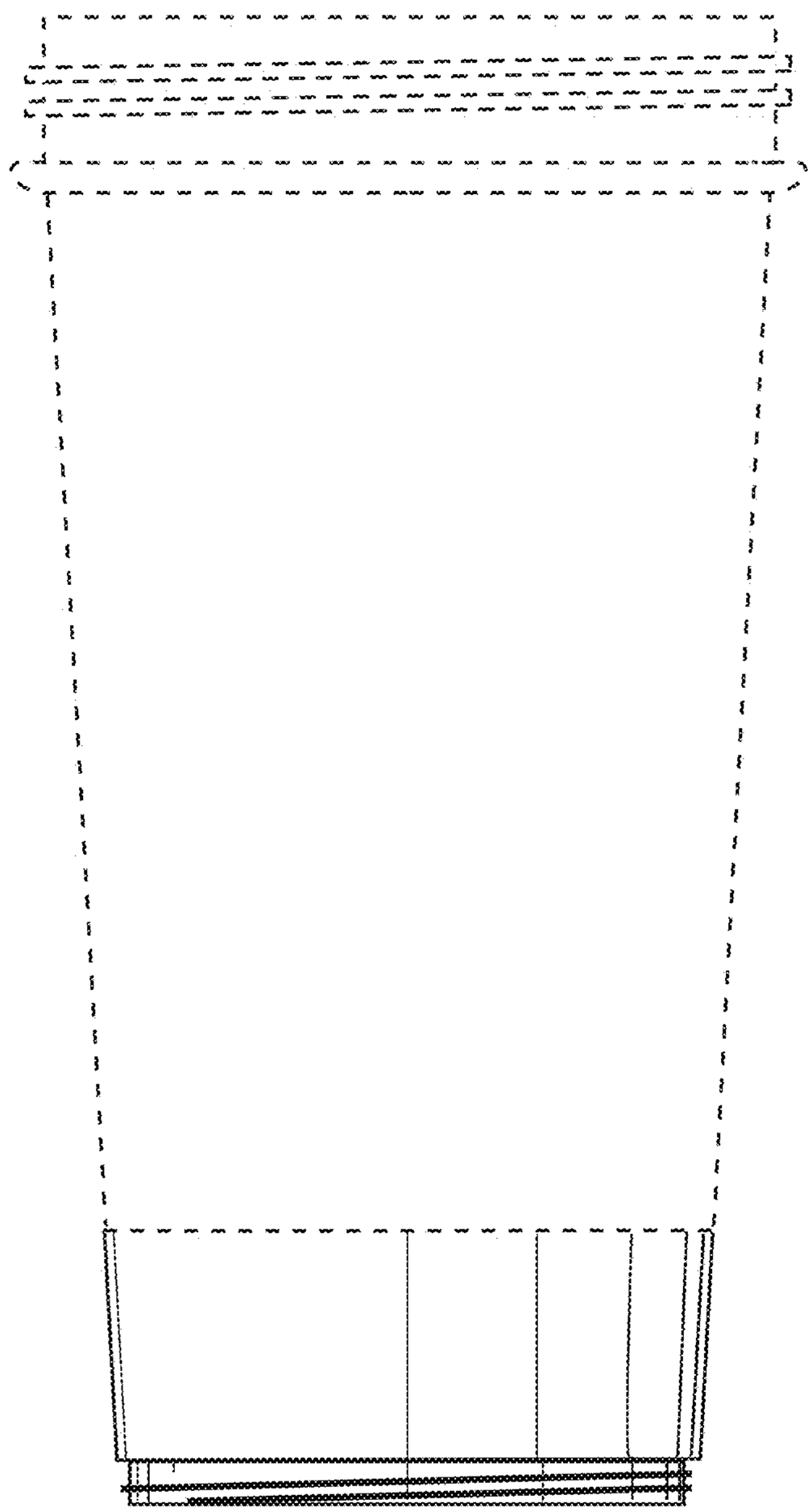

Fig. 4

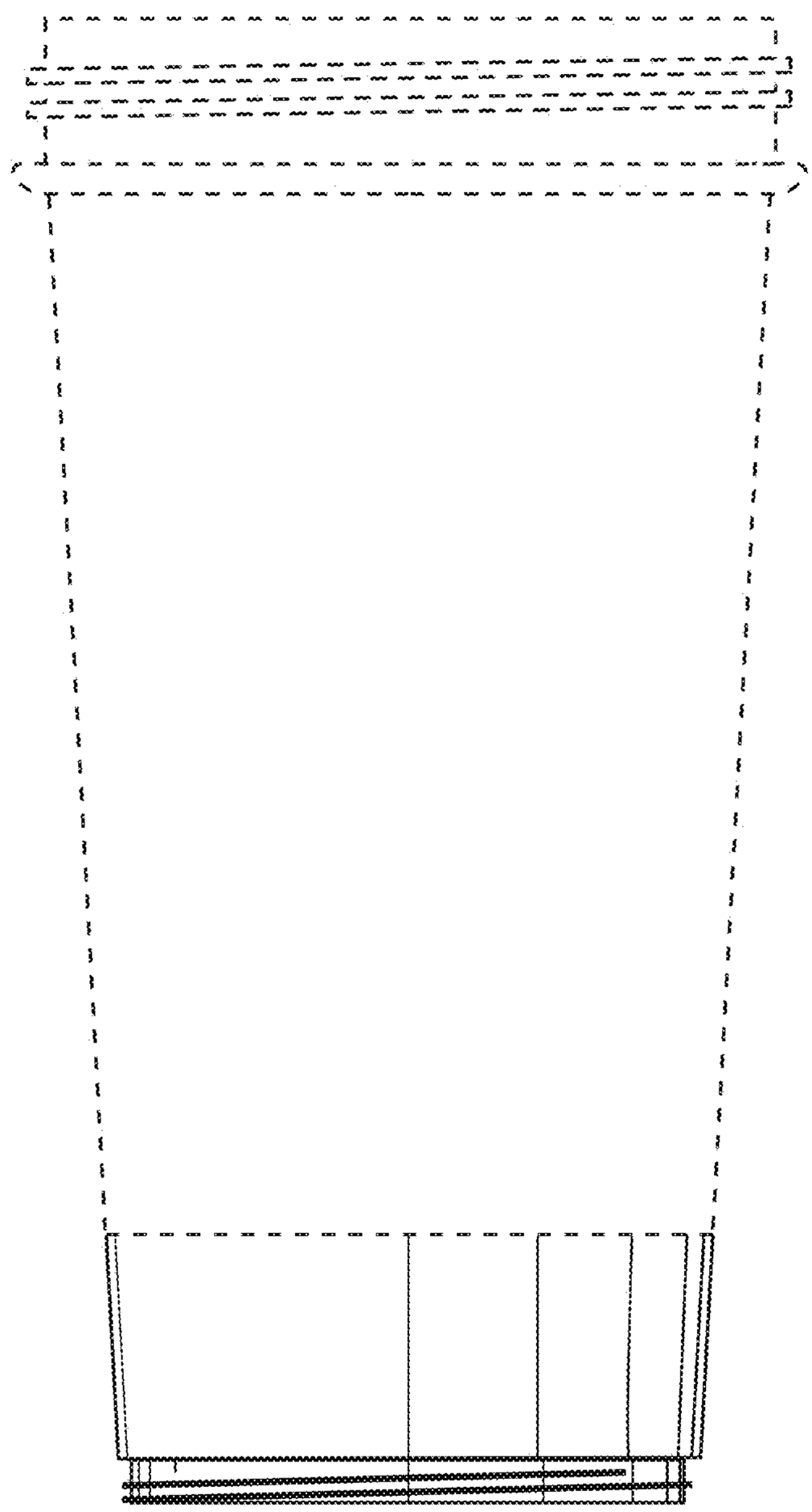

Fig. 5

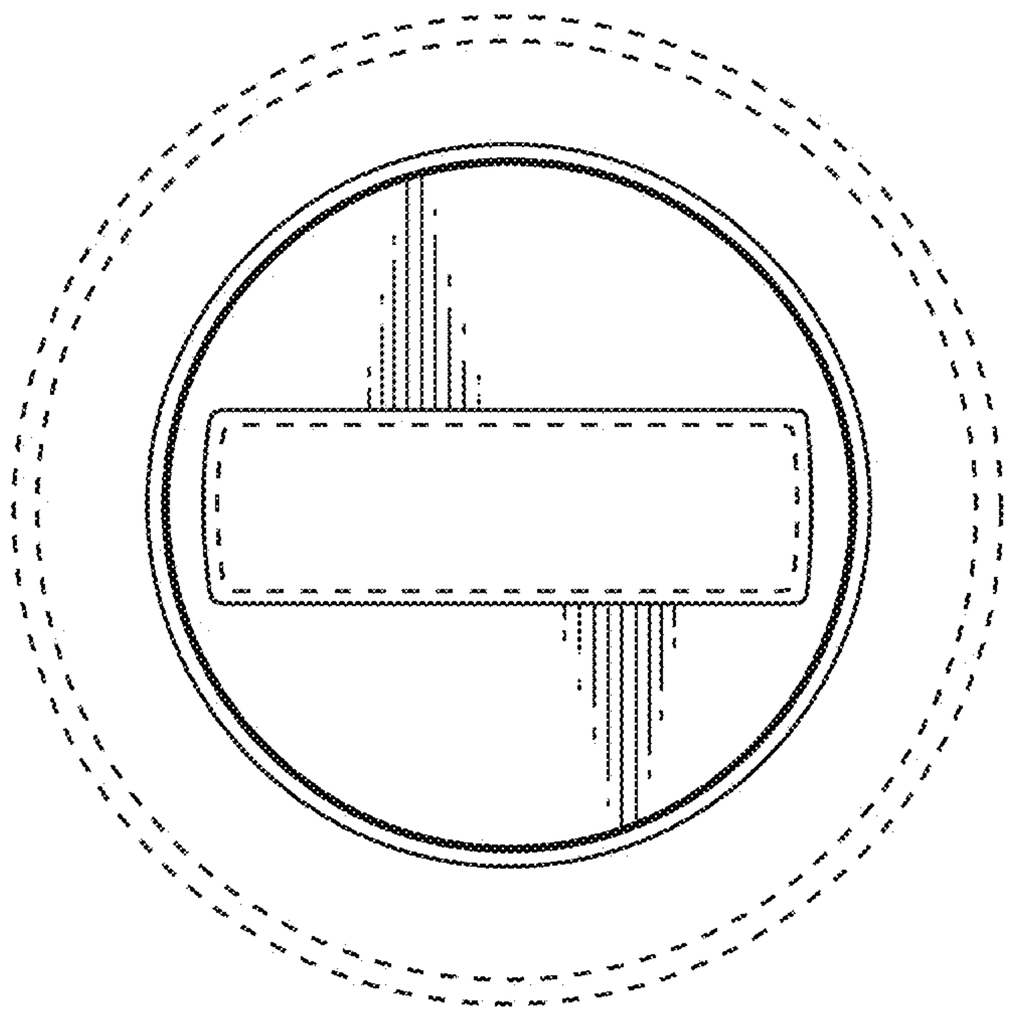

Fig. 6

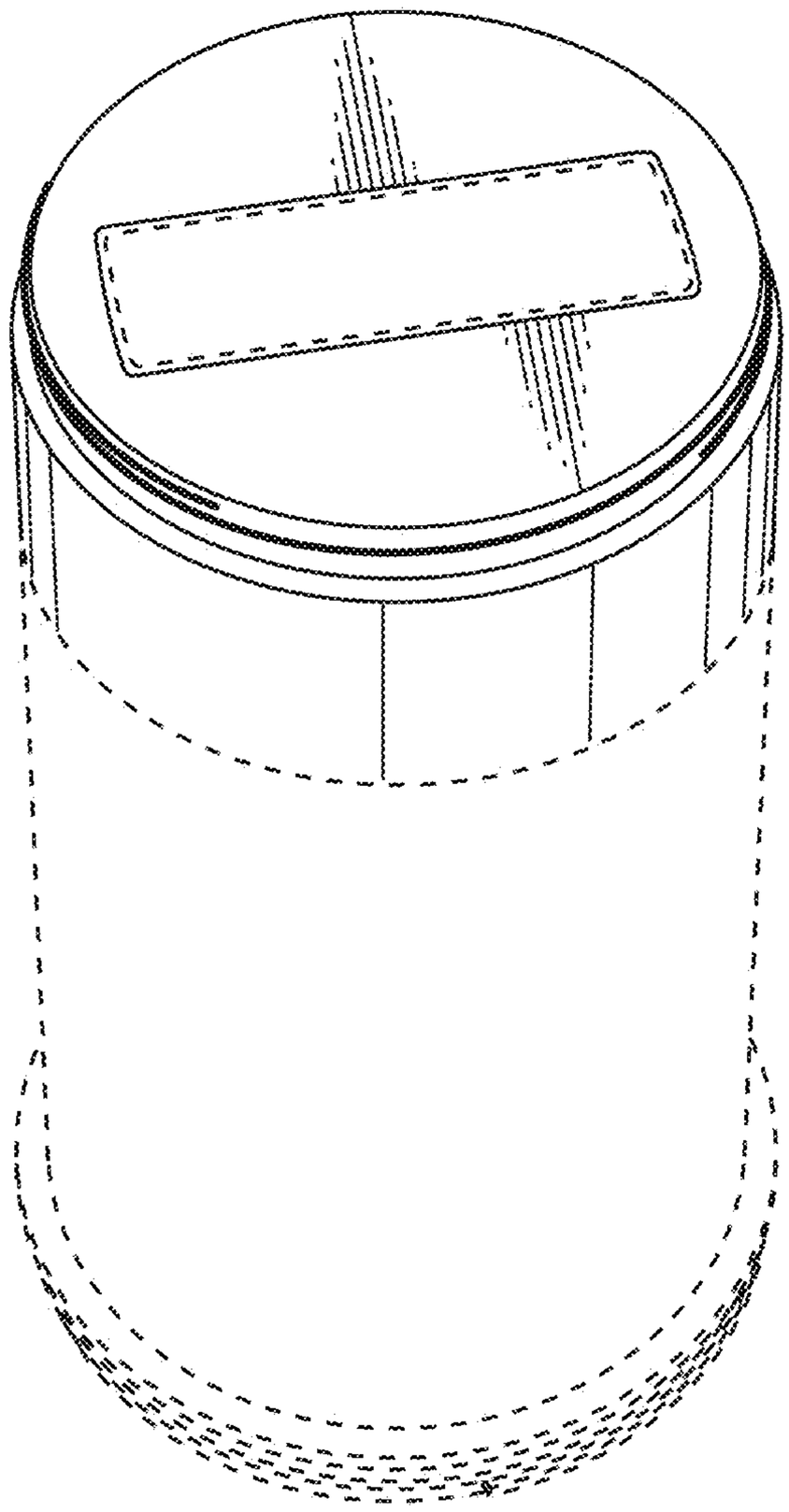

Fig. 7