US00D753421S

(12) United States Design Patent
Cheng

(10) Patent No.: US D753,421 S
(45) Date of Patent: ** Apr. 12, 2016

(54) **PARTITION PLATE OF STORAGE RACK**

(71) Applicant: **WIRE MASTER INDUSTRY CO., LTD.**, Changhua Hsien (TW)

(72) Inventor: **Hsi-Ming Cheng**, Changhua Hsien (TW)

(73) Assignee: **WIRE MASTER INDUSTRY CO., LTD.**, Changhua Hsien (TW)

(**) Term: **15 Years**

(21) Appl. No.: **29/528,052**

(22) Filed: **May 26, 2015**

(51) **LOC (10) Cl.** **06-06**

(52) **U.S. Cl.**
USPC **D6/675.2**

(58) **Field of Classification Search**
USPC D6/675, 675.1, 675.2; 211/31.1, 85.26, 211/85.31, 85.4, 33, 134, 186–191, 194, 211/181.1
CPC A47B 45/00; A47B 47/021
See application file for complete search history.

(56) **References Cited**

U.S. PATENT DOCUMENTS

D289,479	S	*	4/1987	Brancher	D6/566
D291,165	S	*	8/1987	Ray	D6/675.2
D326,579	S	*	6/1992	Leeds	D6/566
D338,792	S	*	8/1993	Chap	D30/120
D362,138	S	*	9/1995	Sagol	D6/675.1
D385,132	S	*	10/1997	Sagol	D6/675.1
D385,444	S	*	10/1997	Welch	D6/705.7
D417,108	S	*	11/1999	Von Gunten	D6/705.6
D418,342	S	*	1/2000	Von Gunten	D6/705.6
D471,033	S	*	3/2003	Yamaguchi	D6/675.2
D489,205	S	*	5/2004	Droppers	D6/705.6
D526,519	S	*	8/2006	Nawrocki	D6/566
D592,897	S	*	5/2009	Welsch	D6/705.6
D597,342	S	*	8/2009	Dickson	D6/675.2
D597,354	S	*	8/2009	Liss	D6/705.6
D602,712	S	*	10/2009	Ho	D6/675.2
D683,984	S	*	6/2013	Troyner	D6/675.2
D701,405	S	*	3/2014	Pace	D6/675.2
D731,212	S	*	6/2015	Hsu	D6/675.2
D743,194	S	*	11/2015	Reinhart	D6/705.5

* cited by examiner

Primary Examiner — Kelley Donnelly

(57) **CLAIM**

The ornamental design for a partition plate of storage rack, as shown and described.

DESCRIPTION

FIG. **1** is a perspective view of a partition plate of storage rack showing my new design;
FIG. **2** is a front elevation view thereof;
FIG. **3** is a rear elevation view thereof;
FIG. **4** is a left side elevation view thereof;
FIG. **5** is a right side elevation view thereof;
FIG. **6** is a top plan view thereof; and,
FIG. **7** is bottom plan view thereof.
FIG. **8** is a reference view of an embodiment of the present invention in a shelf configuration; and,
FIG. **9** is a reference view for another embodiment of the present invention.
The broken lines are for the purpose of illustrating the environment of the article only and form no part of the claimed design.

1 Claim, 6 Drawing Sheets

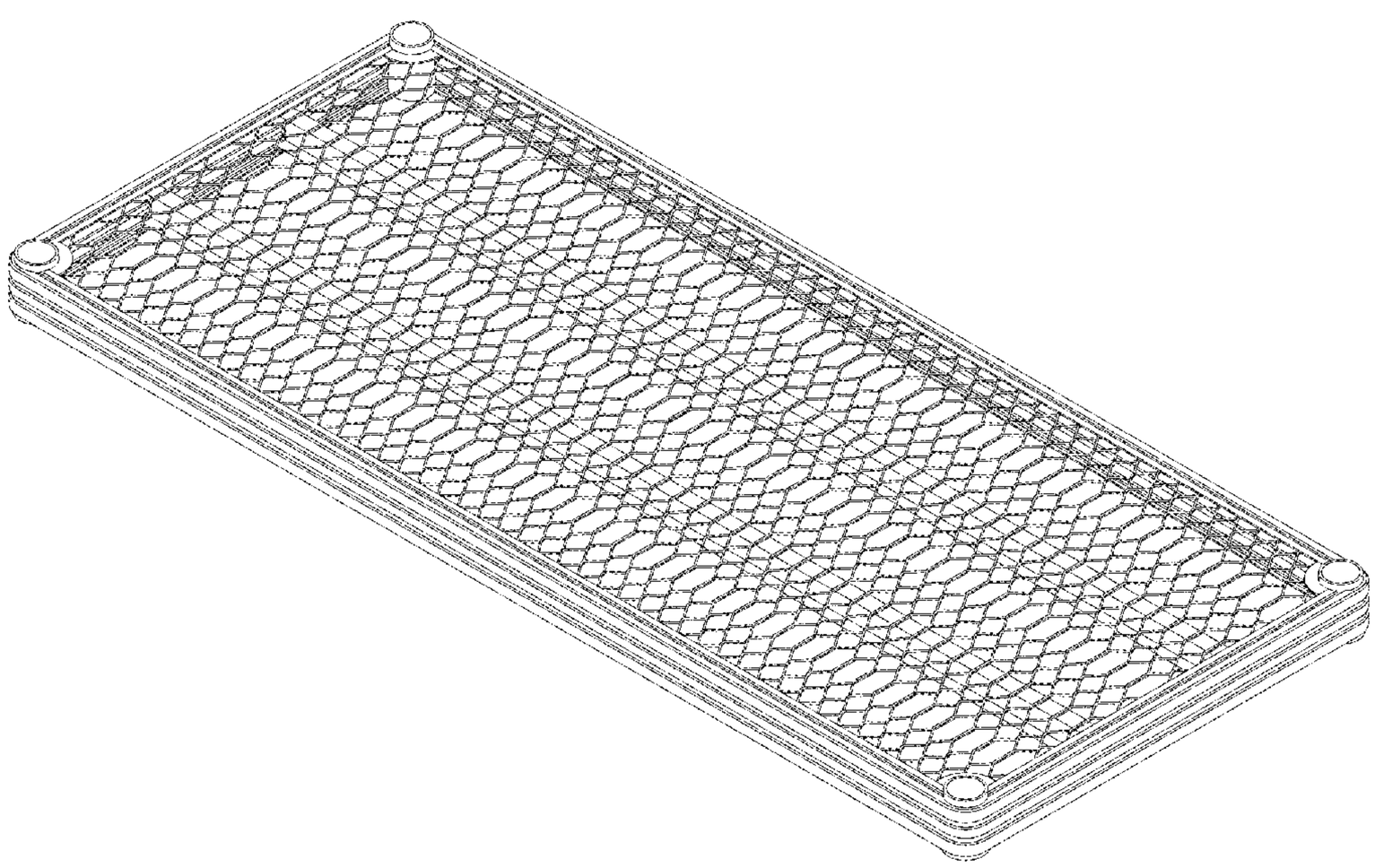

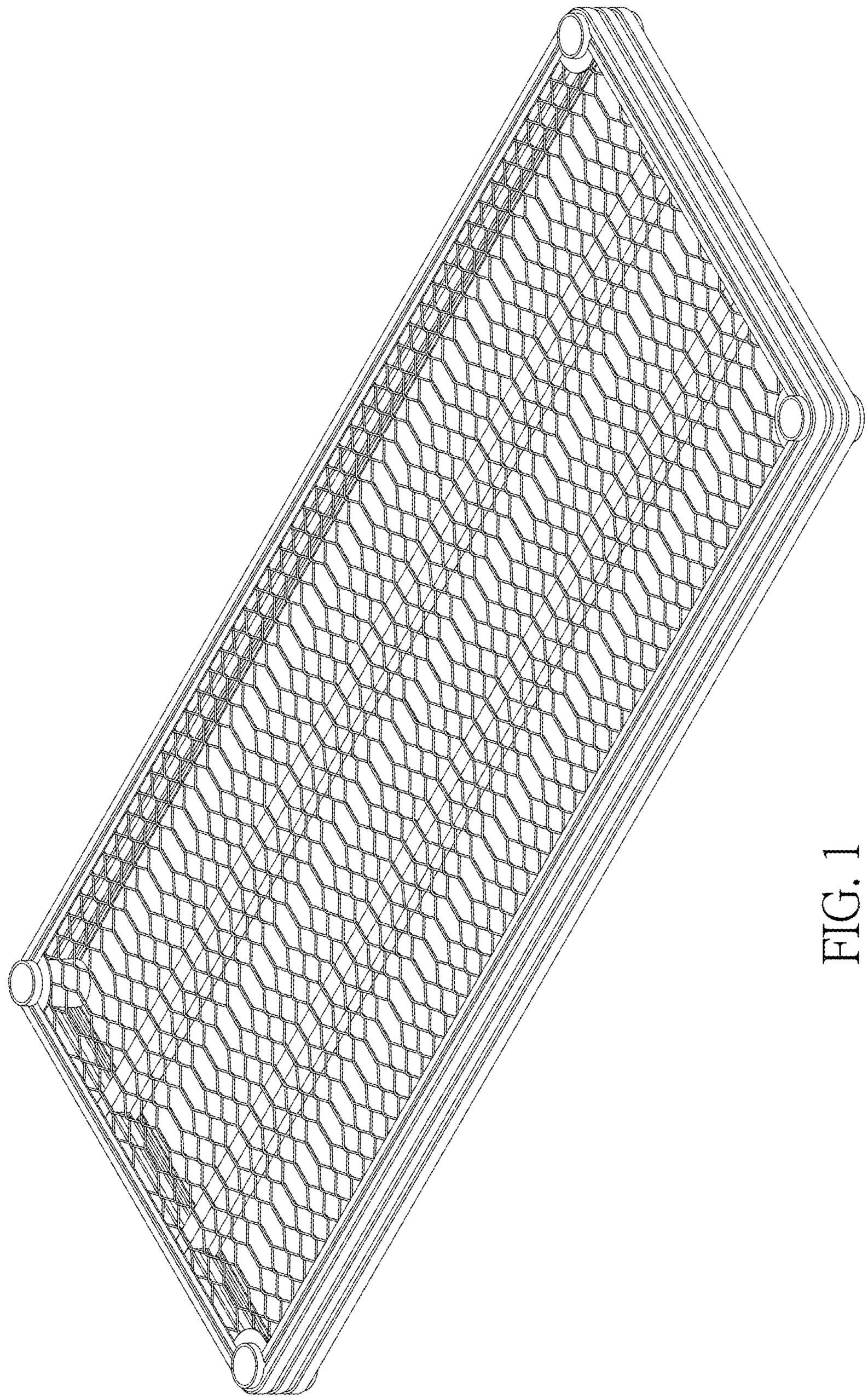

FIG. 1

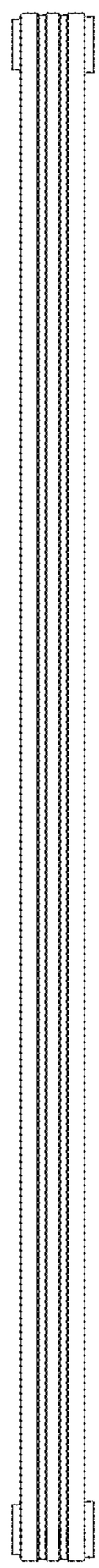

FIG. 2

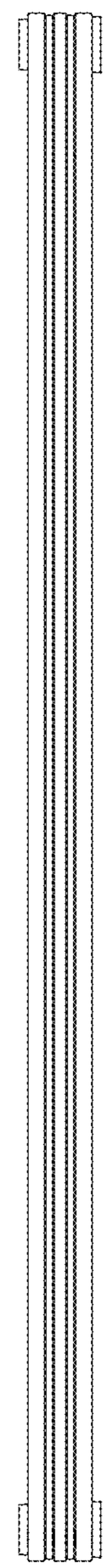

FIG. 3

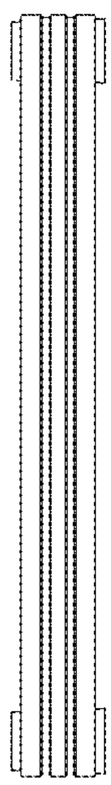

FIG. 4

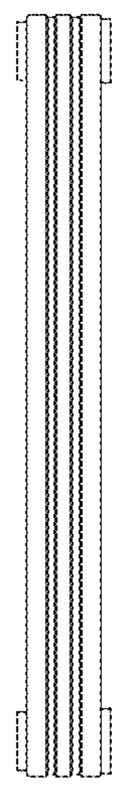

FIG. 5

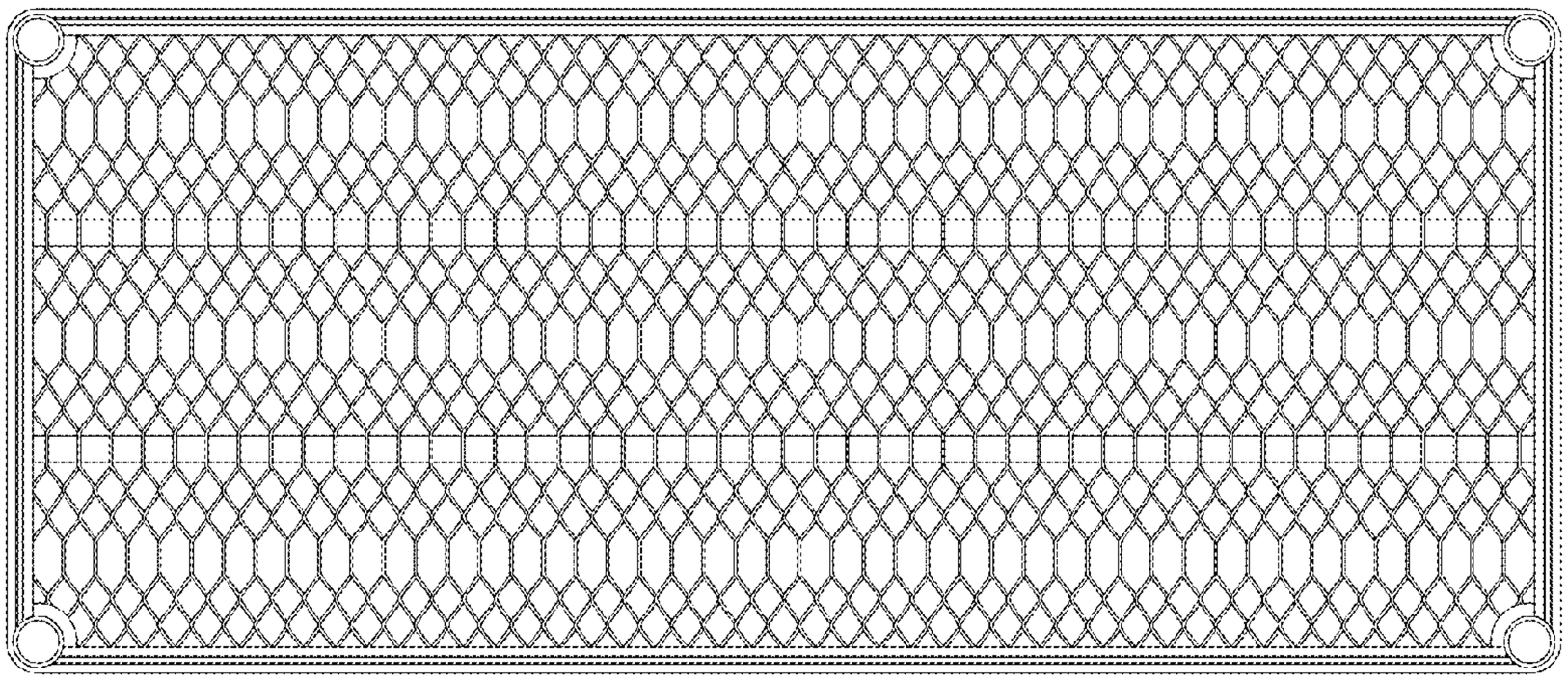

FIG. 6

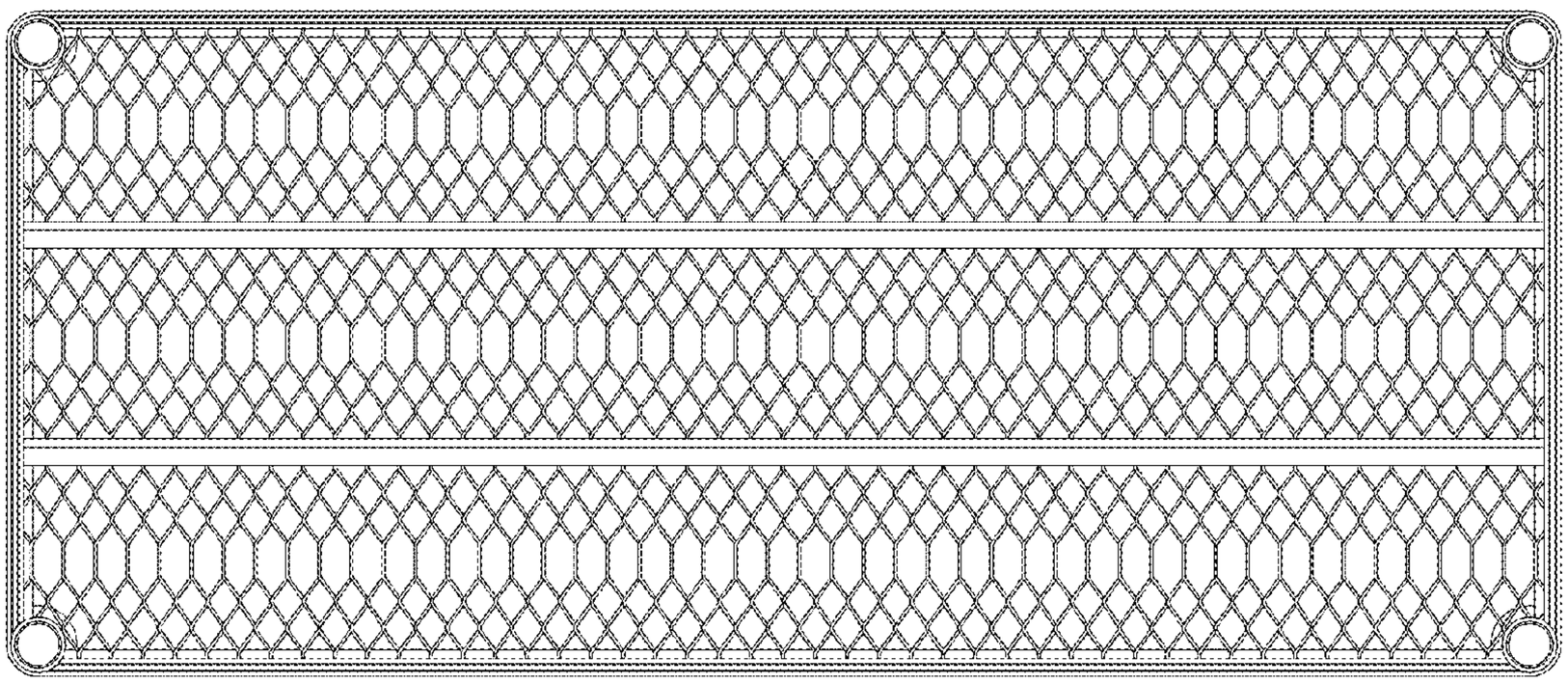

FIG. 7

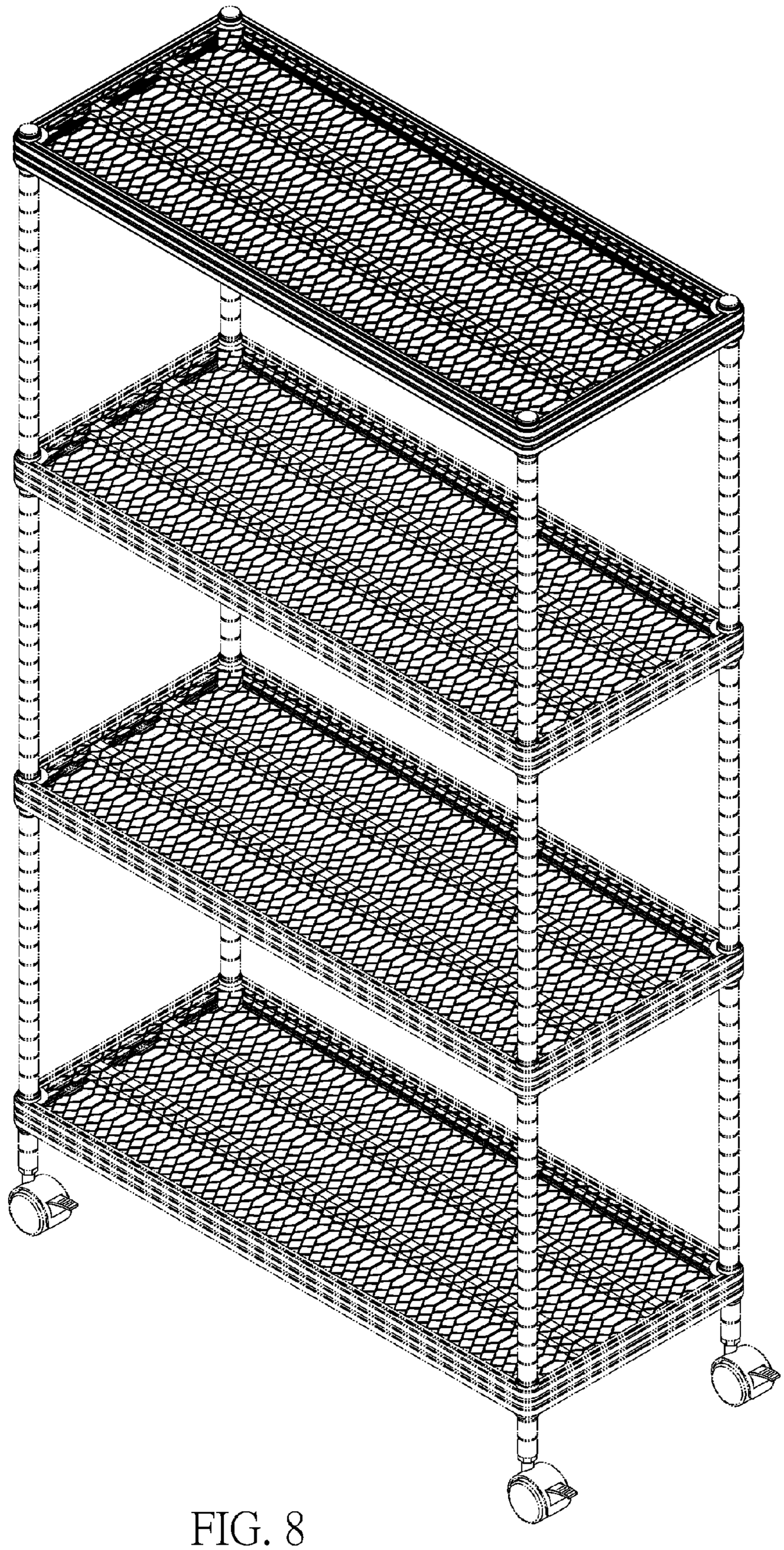

FIG. 8

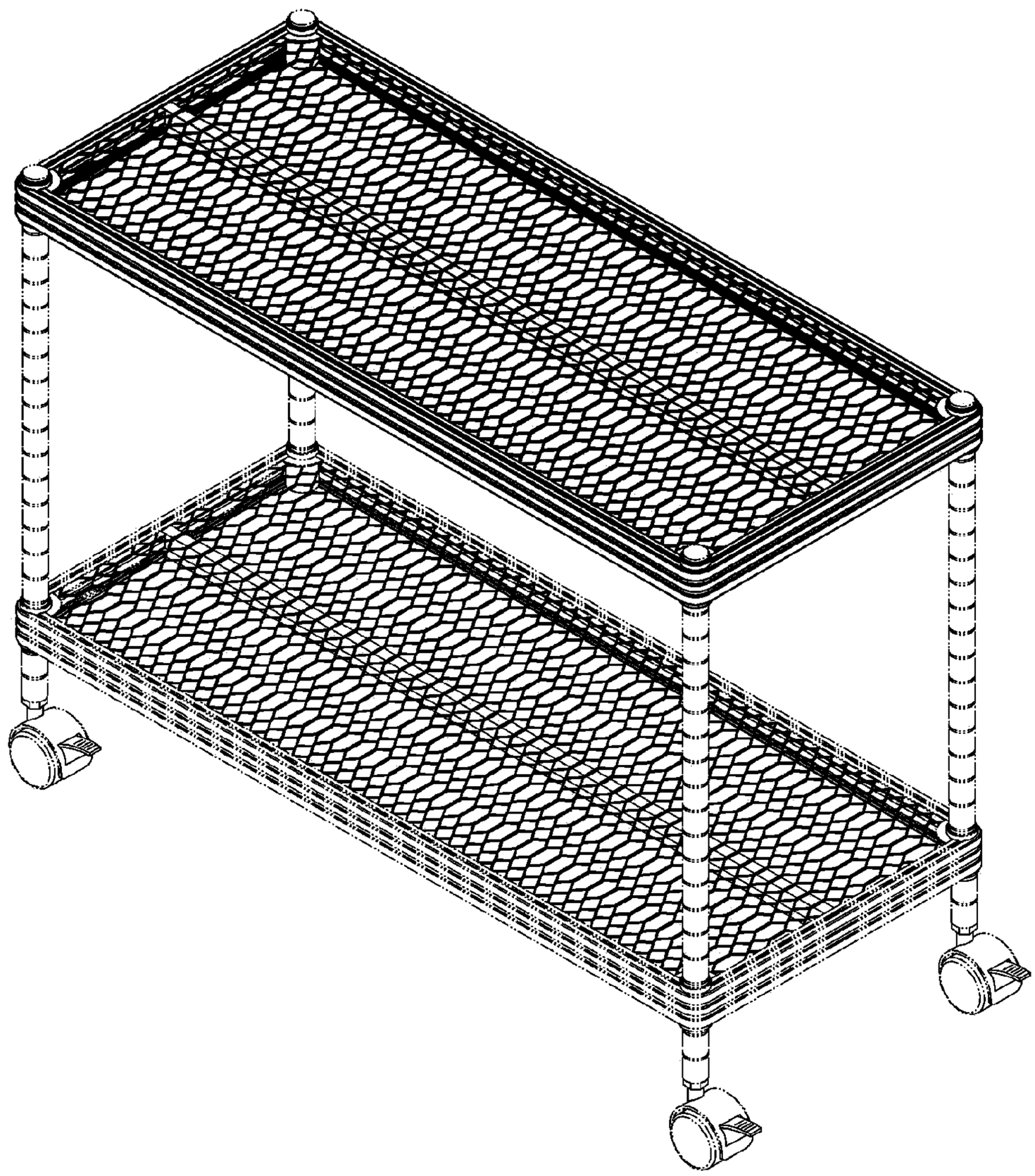

FIG. 9