US00D753311S

(12) United States Design Patent
Long

(10) Patent No.: US D753,311 S
(45) Date of Patent: ** *Apr. 5, 2016

(54) **ISOTHERMAL NUCLEIC ACID AMPLIFICATION METER**

(75) Inventor: **Nicholas D. Long**, Harrold (GB)

(73) Assignee: **Alere Switzerland GmbH**, Zug (CH)

(*) Notice: This patent is subject to a terminal disclaimer.

(**) Term: **14 Years**

(21) Appl. No.: **29/417,877**

(22) Filed: **Apr. 10, 2012**

(30) **Foreign Application Priority Data**

Oct. 12, 2011 (EM) 001298145-0001

(51) **LOC (10) Cl.** **24-01**

(52) **U.S. Cl.**
USPC **D24/186**

(58) **Field of Classification Search**
USPC D24/186, 216, 230–233, 165, 183, 110, D24/158, 184, 190; 600/308; 14/69.5; 435/287.1, 287.3; 436/807–817; 229/125.37; 248/118; 472/89; 132/73, 132/287; D3/269, 282–284, 200, 276, 204, D3/274, 294, 304; D6/601, 310, 349, 519, D6/609; D7/678; D8/47, 14, 402, 102, D8/104, 347, 75; D9/422, 734, 414, D9/431–432, 454, 456, 499, 739; D10/81, D10/15, 2, 4, 21, 6, 106.1, 11, 121, 22, 23, D10/26, 40; D12/217, 406, 410–413; D13/110, 167, 184, 164, 179, 152, 162, D13/163; D14/240–243, 356, 149, 171, D14/500, 168, 140, 144, 150, 160, 253, 314, D14/459, 498, 214, 188, 217, 204; D15/136; D16/237; D18/11, 12; D21/187, 686, 663, 801, 802, 504, 817, D21/803, 505; D26/142, 67, 85, 26, 72; D28/56–57, 7; D32/14.1; D34/32–33; D25/102, 113; D23/366; 254/88

CPC G01N 27/07; G01N 33/54366; G01N 33/54373; G01N 35/025; G01N 33/558; G01N 21/8483; A61B 5/026; C12M 1/3446; A61K 38/00

See application file for complete search history.

(56) **References Cited**

U.S. PATENT DOCUMENTS

D91,630 S * 2/1934 Klein et al. D9/499
D141,214 S * 5/1945 Leichter D18/11
D185,929 S * 8/1959 Pitman D18/11
D245,152 S * 7/1977 Miller D9/432

(Continued)

Primary Examiner — T. Chase Nelson
Assistant Examiner — Mark Cavanna
(74) *Attorney, Agent, or Firm* — Foley & Hoag LLP

(57) **CLAIM**

The ornamental design for an isothermal nucleic acid amplification meter, as shown and described.

DESCRIPTION

FIG. **1** is a perspective view from one side of an isothermal nucleic acid amplification meter;
FIG. **2** is a plan view from the front of the isothermal nucleic acid amplification meter of FIG. **1**;
FIG. **3** is a plan view from the rear of the isothermal nucleic acid amplification meter of FIG. **1**;
FIG. **4** is a plan view from the right side of the isothermal nucleic acid amplification meter of FIG. **1**;
FIG. **5** is a plan view from the left side of the isothermal nucleic acid amplification meter of FIG. **1**;
FIG. **6** is a plan view from above the isothermal nucleic acid amplification meter of FIG. **1**; and,
FIG. **7** is a plan view from below the isothermal nucleic acid amplification meter of FIG. **1**.
The broken lines in FIGS. **1-7** are included for the purpose of illustrating unclaimed portions of the isothermal nucleic acid amplification meter and form no part of the claimed design.

1 Claim, 6 Drawing Sheets

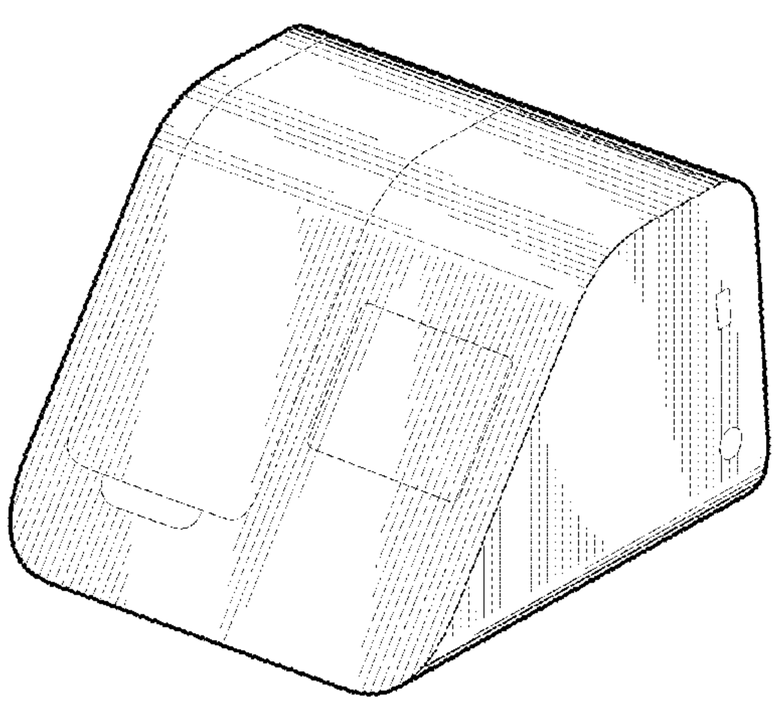

(56) **References Cited**

U.S. PATENT DOCUMENTS

D250,934 S * 1/1979 Fannin D10/40
D260,886 S * 9/1981 Taylor D14/314
D275,101 S * 8/1984 Read D10/106.1
D276,998 S * 1/1985 Caven D13/179
D285,554 S * 9/1986 Beaumont D13/164
D288,478 S * 2/1987 Carlson D24/216
D317,480 S * 6/1991 Skov D21/504
5,033,146 A * 7/1991 Fogarty B66F 7/243 14/69.5
D321,636 S * 11/1991 Ciciliot D8/14
D331,696 S * 12/1992 Graham D26/142
D336,224 S * 6/1993 Terry D8/14
D347,008 S * 5/1994 Theisen D14/160
D347,428 S * 5/1994 Solomita D10/2
5,326,056 A * 7/1994 Smith A45D 29/22 132/73
D353,487 S * 12/1994 Smith D3/304
D358,337 S * 5/1995 Wilson D10/15
D359,287 S * 6/1995 Heberling D14/242
D365,340 S * 12/1995 Hill D14/356
D377,650 S * 1/1997 Obata D14/171
D391,923 S * 3/1998 Tracey D13/167
D442,006 S * 5/2001 Miller D6/601
6,305,388 B1 * 10/2001 Zeller A45D 44/02 132/287
D451,568 S * 12/2001 Gordon D21/801
D464,627 S * 10/2002 Metcalf D13/152
D465,050 S * 10/2002 Crelin D26/85
D483,428 S * 12/2003 Frey D21/817
D487,533 S * 3/2004 Abbott D28/57
D488,126 S * 4/2004 Baswick D13/110
D495,318 S * 8/2004 Dayan D14/214
D500,113 S * 12/2004 Frey D21/817
D501,136 S * 1/2005 Shurman D9/422
D501,401 S * 2/2005 Shurman D9/422
D511,767 S * 11/2005 Ishizaki D14/188
D516,056 S * 2/2006 Hsiau D14/188
D537,951 S * 3/2007 Okamoto D24/233
D556,914 S * 12/2007 Okamoto D24/233
D561,376 S * 2/2008 Guercio D26/85
D561,377 S * 2/2008 Guercio D26/85
D561,735 S * 2/2008 Nagura D14/168
D565,131 S * 3/2008 Decker D21/686
D565,734 S * 4/2008 Scott D24/183
D577,440 S * 9/2008 Ferber D24/165
D578,219 S * 10/2008 Daggett D24/183
D582,408 S * 12/2008 Maiers D14/356
D583,060 S * 12/2008 Kitamura D24/165
D583,474 S * 12/2008 Mitsunami D24/165
D583,977 S * 12/2008 Guercio D26/85
D584,445 S * 1/2009 Guercio D26/85
D597,103 S * 7/2009 Xiao D14/500
D598,551 S * 8/2009 Miwa D24/186
D622,424 S * 8/2010 Smith D26/26
D630,617 S * 1/2011 Ayres D14/217
D637,375 S * 5/2011 Haren D34/32
D644,402 S * 8/2011 Shoup D34/32
D652,883 S * 1/2012 VanElverdinghe D21/801
D652,884 S * 1/2012 VanElverdinghe D21/803
D662,077 S * 6/2012 Deffarges D14/204
D664,148 S * 7/2012 Josefek D14/459
D665,501 S * 8/2012 Shibata D24/165
D669,213 S * 10/2012 Celia D28/7
D673,928 S * 1/2013 Desrosiers D14/204
D675,267 S * 1/2013 Jamison, Jr. D21/686
D678,845 S * 3/2013 Singer D13/152
D680,176 S * 4/2013 Chin D21/505
D682,432 S * 5/2013 Khan D24/186
D689,193 S * 9/2013 Shinohara D24/216
D691,096 S * 10/2013 Beroukas D13/162
D712,750 S * 9/2014 Glenn D9/734
D716,990 S * 11/2014 Yu D26/72
D717,440 S * 11/2014 Shibata D24/165
D717,968 S * 11/2014 Klein D24/232
D718,149 S * 11/2014 Glenn D9/734
D718,282 S * 11/2014 Bennett D13/163
D722,976 S * 2/2015 Okado D13/152
D725,463 S * 3/2015 Kuo D9/414
D741,285 S * 10/2015 Boynton D14/188
2006/0027794 A1 * 2/2006 Heinz B66F 7/243 254/88

* cited by examiner

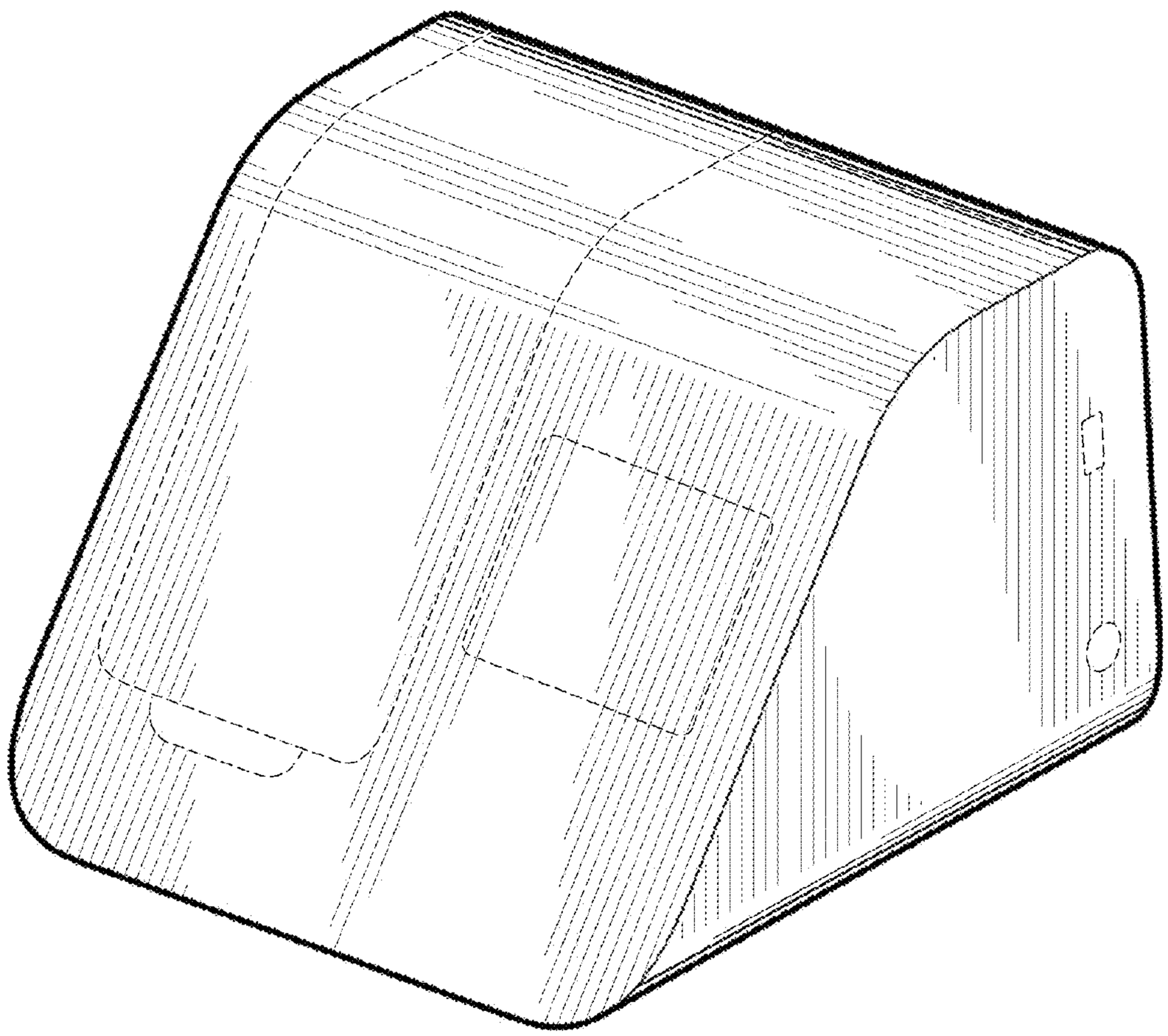

Fig. 1

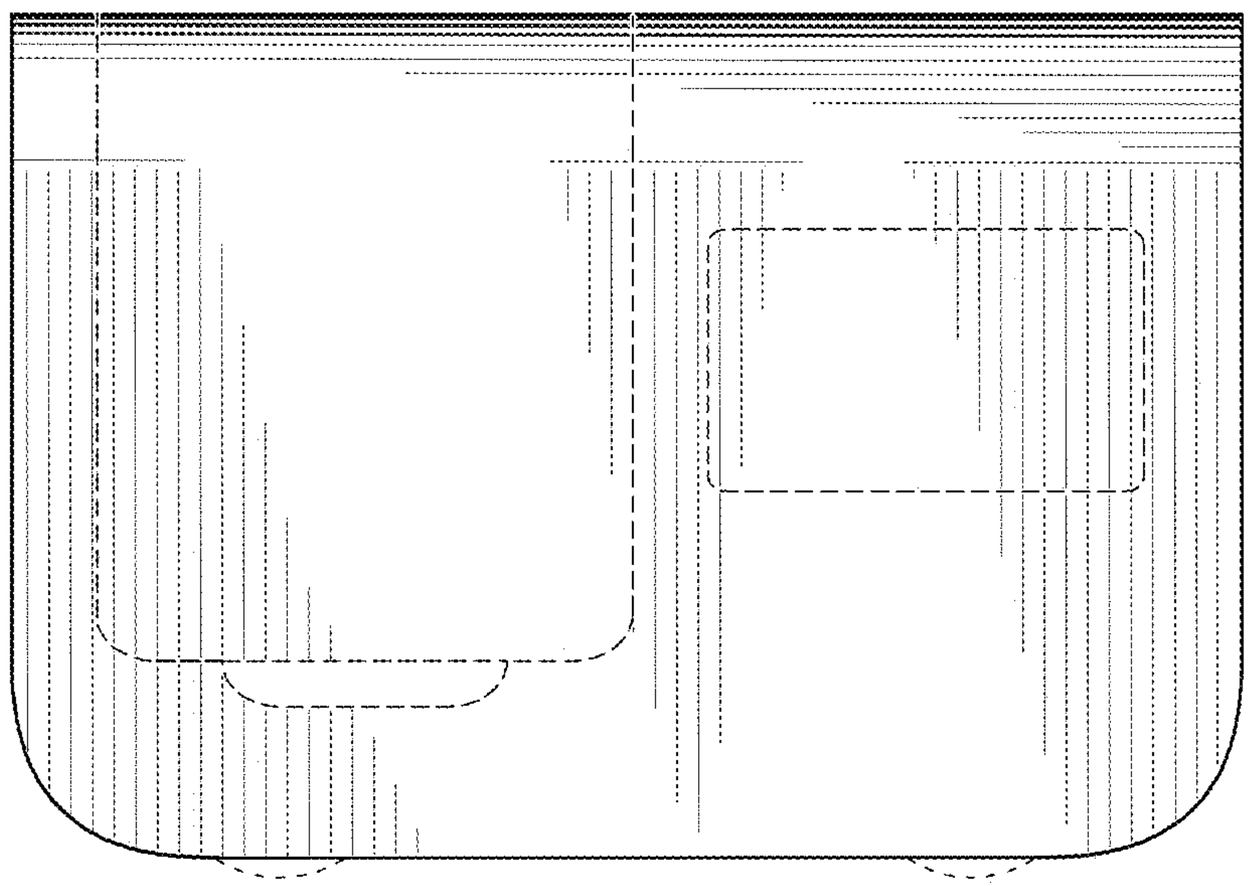

Fig. 2

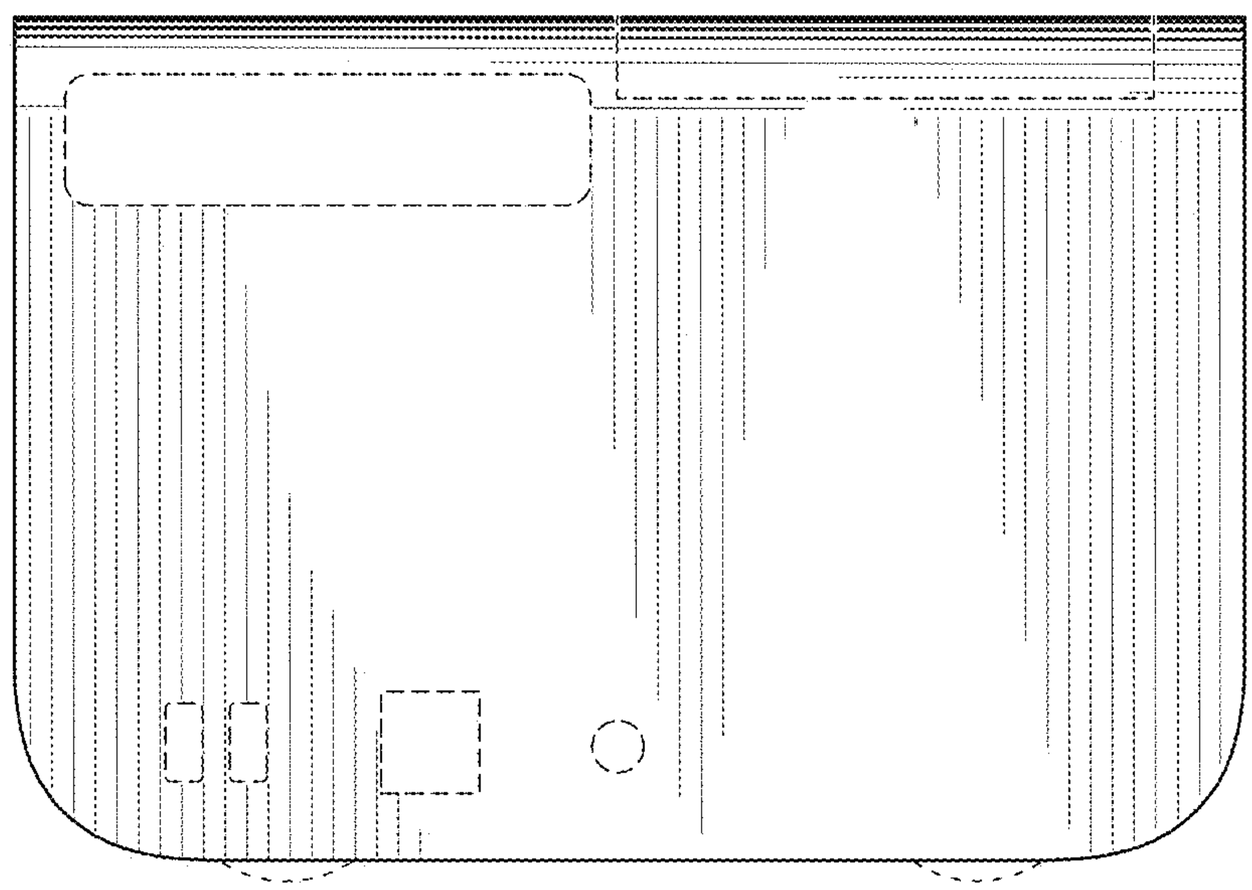

Fig. 3

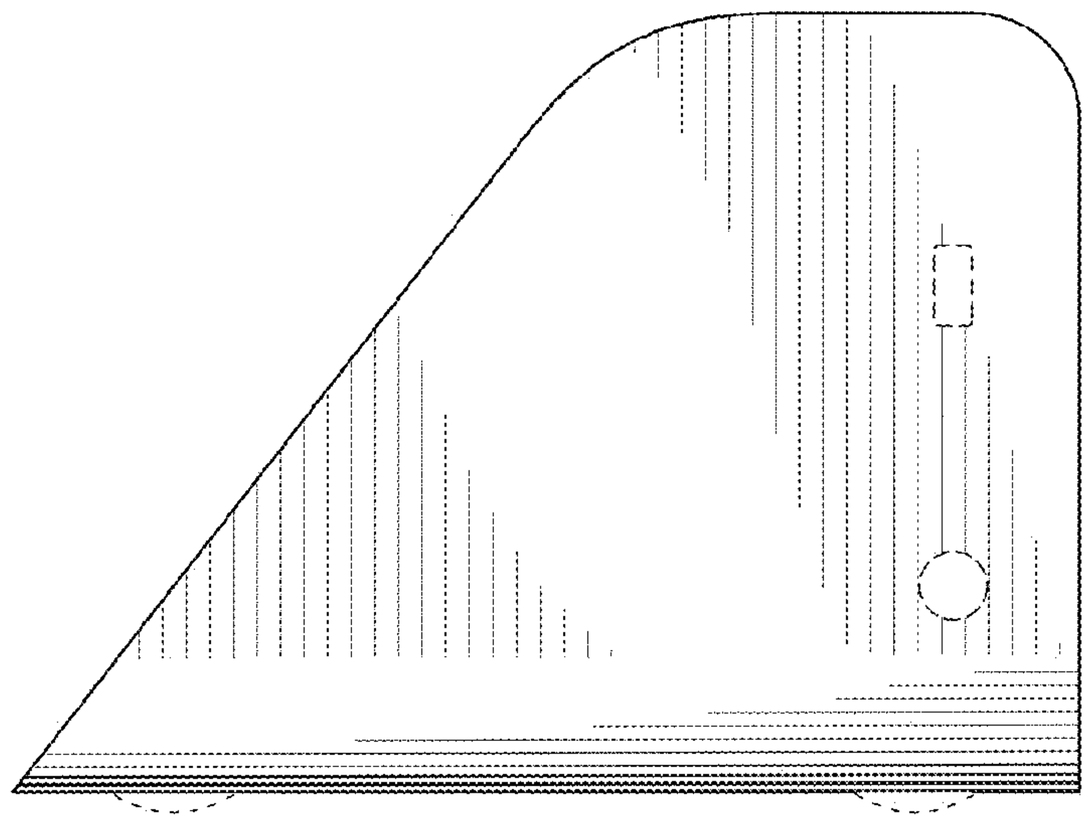

Fig. 4

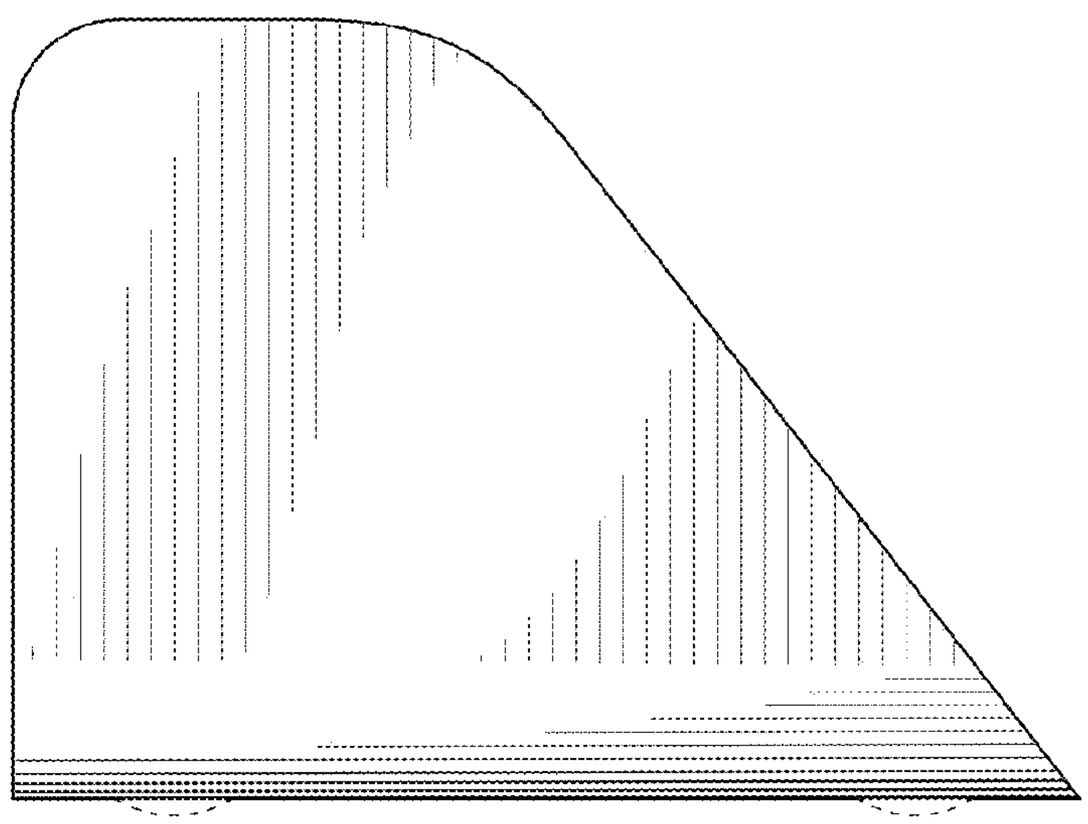

Fig. 5

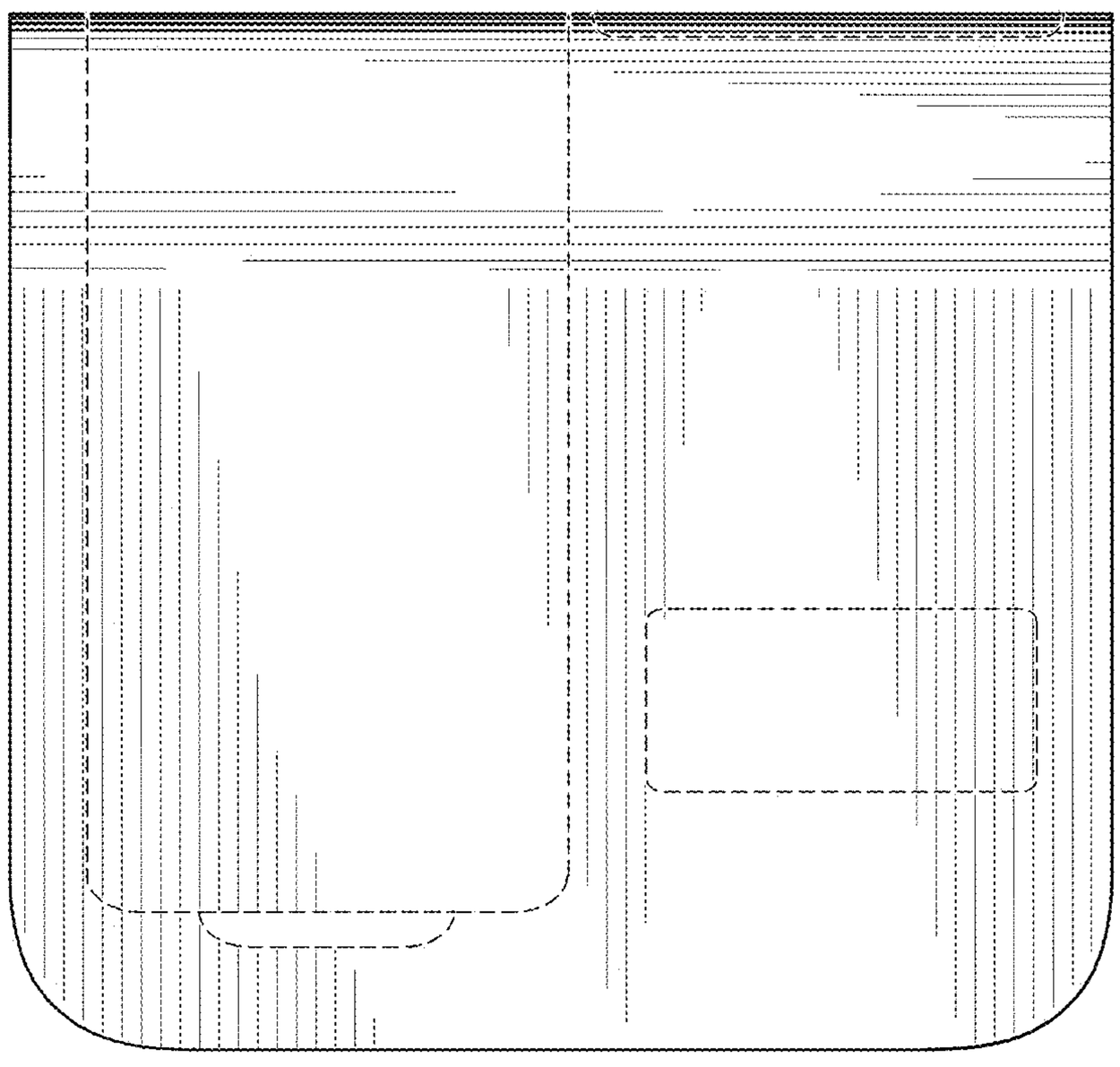

Fig. 6

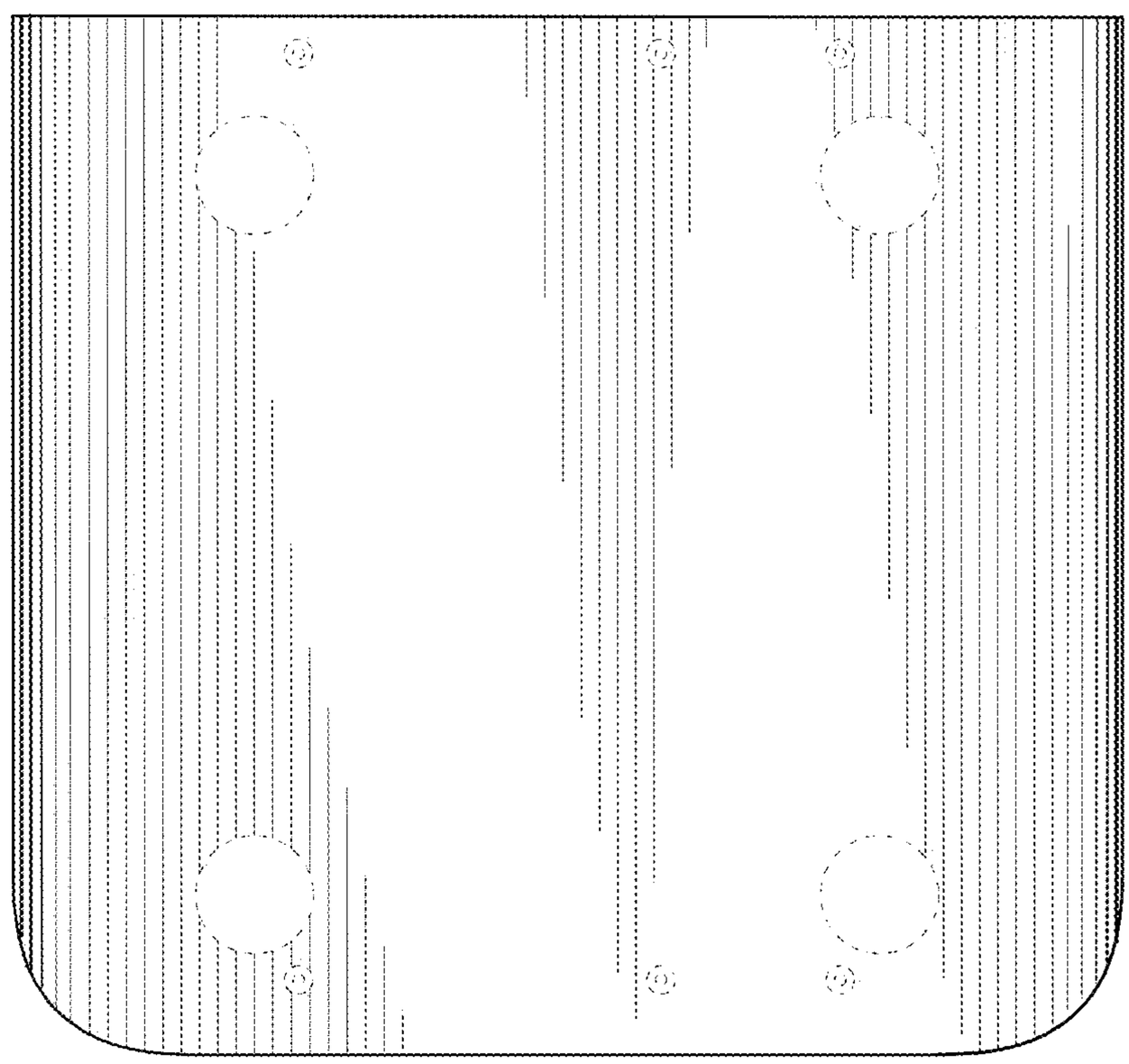

Fig. 7