US00D753300S

# (12) United States Design Patent

Di Spiezio Sardo et al.

(10) Patent No.: US D753,300 S
(45) Date of Patent: ** Apr. 5, 2016

(54) **GRASPING FORCEPS**

(71) Applicant: **KARL STORZ GmbH & Co. KG**, Tuttlingen (DE)

(72) Inventors: **Attilio Di Spiezio Sardo**, Naples (IT); **Yann Thouement**, Les Essarts le Roi (FR)

(73) Assignee: **KARL STORZ GmbH & Co. KG**, Tuttlingen (DE)

(**) Term: **14 Years**

(21) Appl. No.: **29/517,921**

(22) Filed: **Feb. 18, 2015**

(30) **Foreign Application Priority Data**

Aug. 14, 2014 (EM) ..... 002519959-0001
Aug. 14, 2014 (EM) ..... 002519959-0002
Aug. 14, 2014 (EM) ..... 002519959-0003
Aug. 14, 2014 (EM) ..... 002519959-0004

(51) **LOC (10) Cl.** ..... **24-02**

(52) **U.S. Cl.**
USPC ..... **D24/143**; D24/146

(58) **Field of Classification Search**
USPC ..... D24/143–144, 145–146, 133; 606/167, 606/174, 205–206, 208
CPC .. A61B 17/28; A61B 17/282; A61B 17/2841; A61B 17/29; A61B 17/2901; A61B 17/2909
See application file for complete search history.

(56) **References Cited**

U.S. PATENT DOCUMENTS

D338,065 S * 8/1993 Rose ..... D24/143
D348,103 S * 6/1994 Brancel ..... D24/143
5,336,238 A * 8/1994 Holmes ..... A61B 17/28 606/170
D354,563 S * 1/1995 Holmes ..... D24/143
5,618,308 A * 4/1997 Holmes ..... A61B 17/28 606/170
6,096,058 A * 8/2000 Boche ..... A61B 17/29 600/564
D641,874 S * 7/2011 Solingen ..... D24/133
8,114,107 B2 * 2/2012 Ahlberg ..... A61B 17/320016 606/174
8,277,475 B2 * 10/2012 Kessler ..... A61B 17/320016 606/174
2013/0158593 A1 * 6/2013 Kiapour ..... A61B 17/29 606/205
2014/0171999 A1 * 6/2014 Goldsmith ..... A61B 17/29 606/174

* cited by examiner

*Primary Examiner* — Wan Laymon
(74) *Attorney, Agent, or Firm* — Muncy, Geissler, Olds & Lowe, P.C.

(57) **CLAIM**

The ornamental design for grasping forceps, as shown and described.

**DESCRIPTION**

FIG. **1** is a top front perspective view of a grasping forceps according to the present invention.
FIG. **2** is a left side view of the grasping forceps of FIG. **1**.
FIG. **3** is a right side view of the grasping forceps of FIG. **1**.
FIG. **4** is a rear view of the grasping forceps of FIG. **1**.
FIG. **5** is a front view of the grasping forceps of FIG. **1**.
FIG. **6** is a top view of the grasping forceps of FIG. **1**.
FIG. **7** is a bottom view of the grasping forceps of FIG. **1**.
FIG. **8** is an enlarged top view of the grasp illustrated in FIG. **1** in an open position.
FIG. **9** is an enlarged left side view of the grasp illustrated in FIG. **1** in an open position.
FIG. **10** is an enlarged perspective view of the grasp illustrated in FIG. **1** in an open position.
FIG. **11** is an enlarged top view of the grasp illustrated in FIG. **1** in a closed position.
FIG. **12** is an enlarged left side view of the grasp illustrated in FIG. **1** in a closed position; and,
FIG. **13** is an enlarged perspective view of the grasp illustrated in FIG. **1** in a closed position.
The dashed lines illustrate environment that does not form a part of the present invention, and no claim is made to the material illustrated with dashed lines.
The grasping forceps is shown with a symbolic break in its length. The appearance of any portion of the article between the break lines forms no part of the claimed design.

**1 Claim, 12 Drawing Sheets**

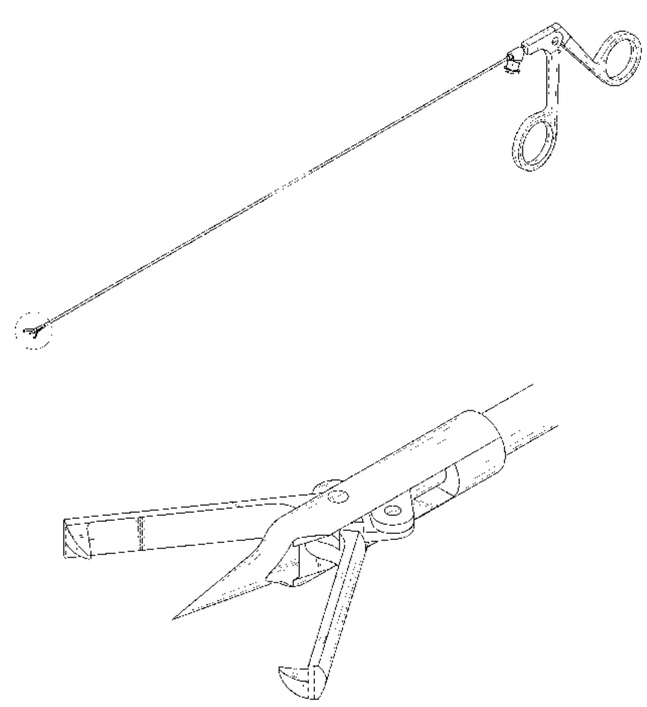

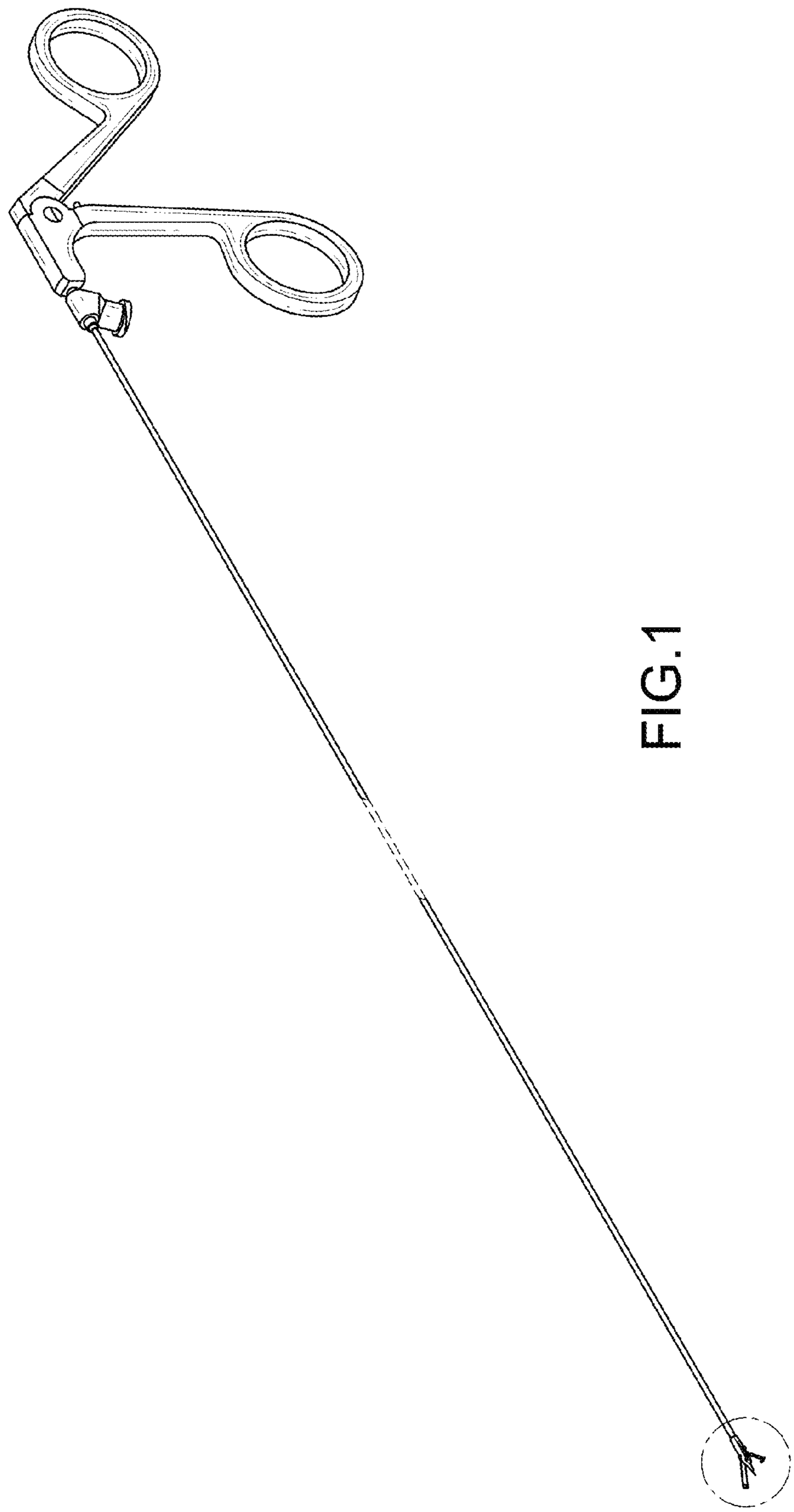

FIG.1

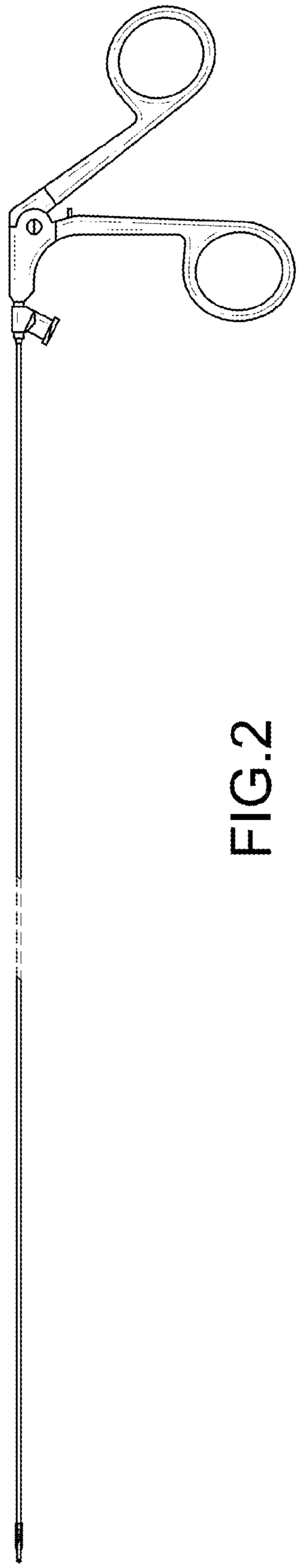

FIG.2

FIG.3

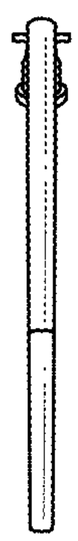

FIG.4

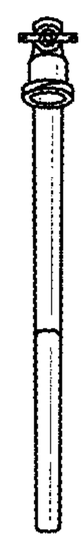

FIG.5

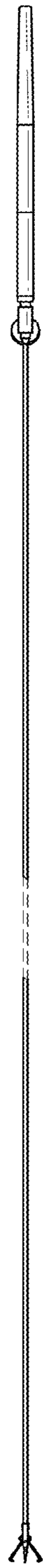

FIG.6

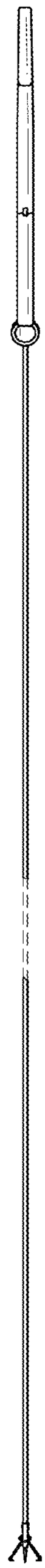

FIG.7

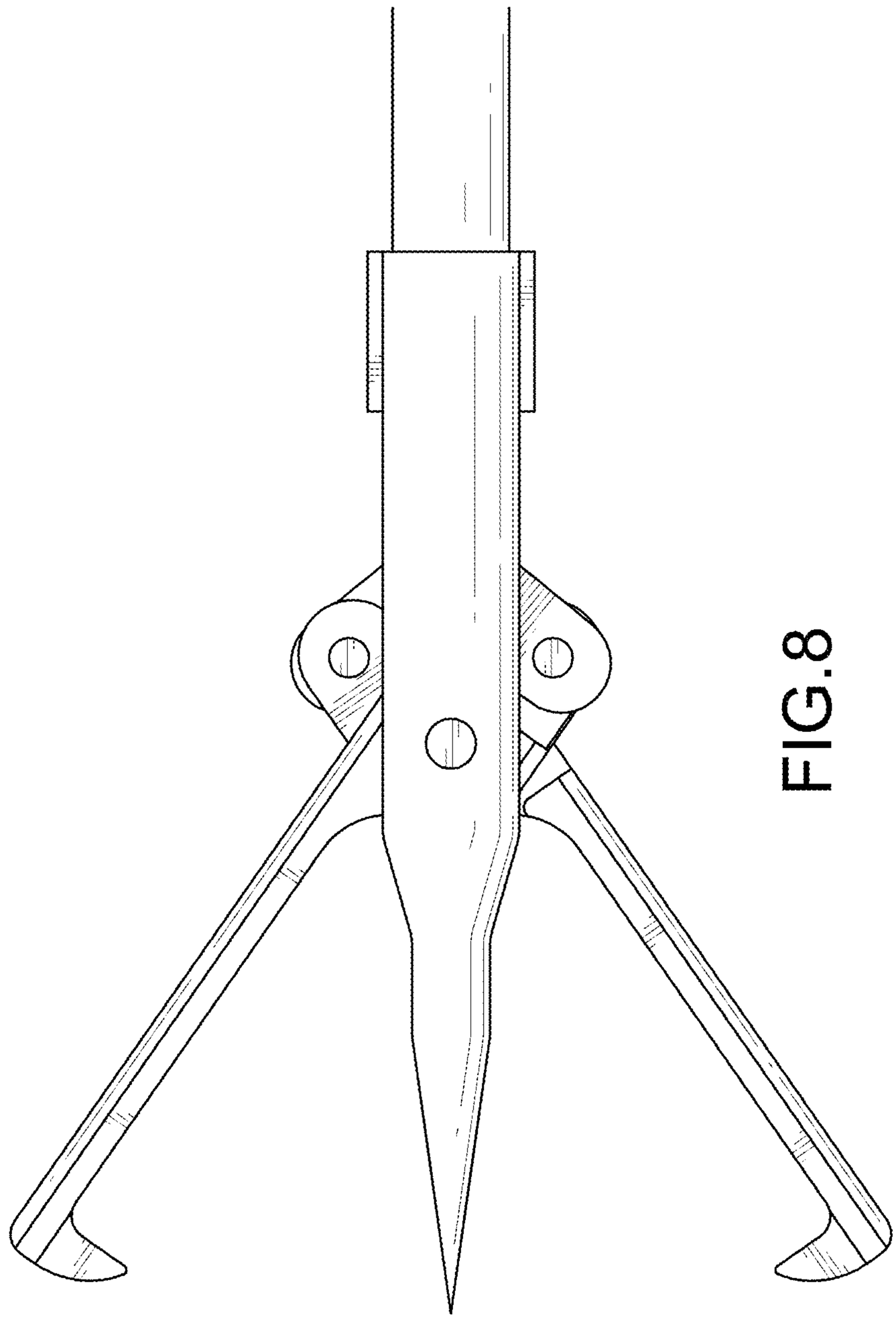

FIG.8

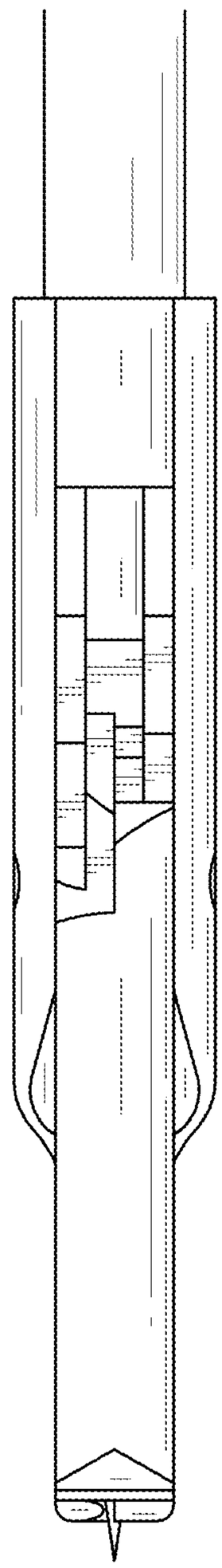

FIG.9

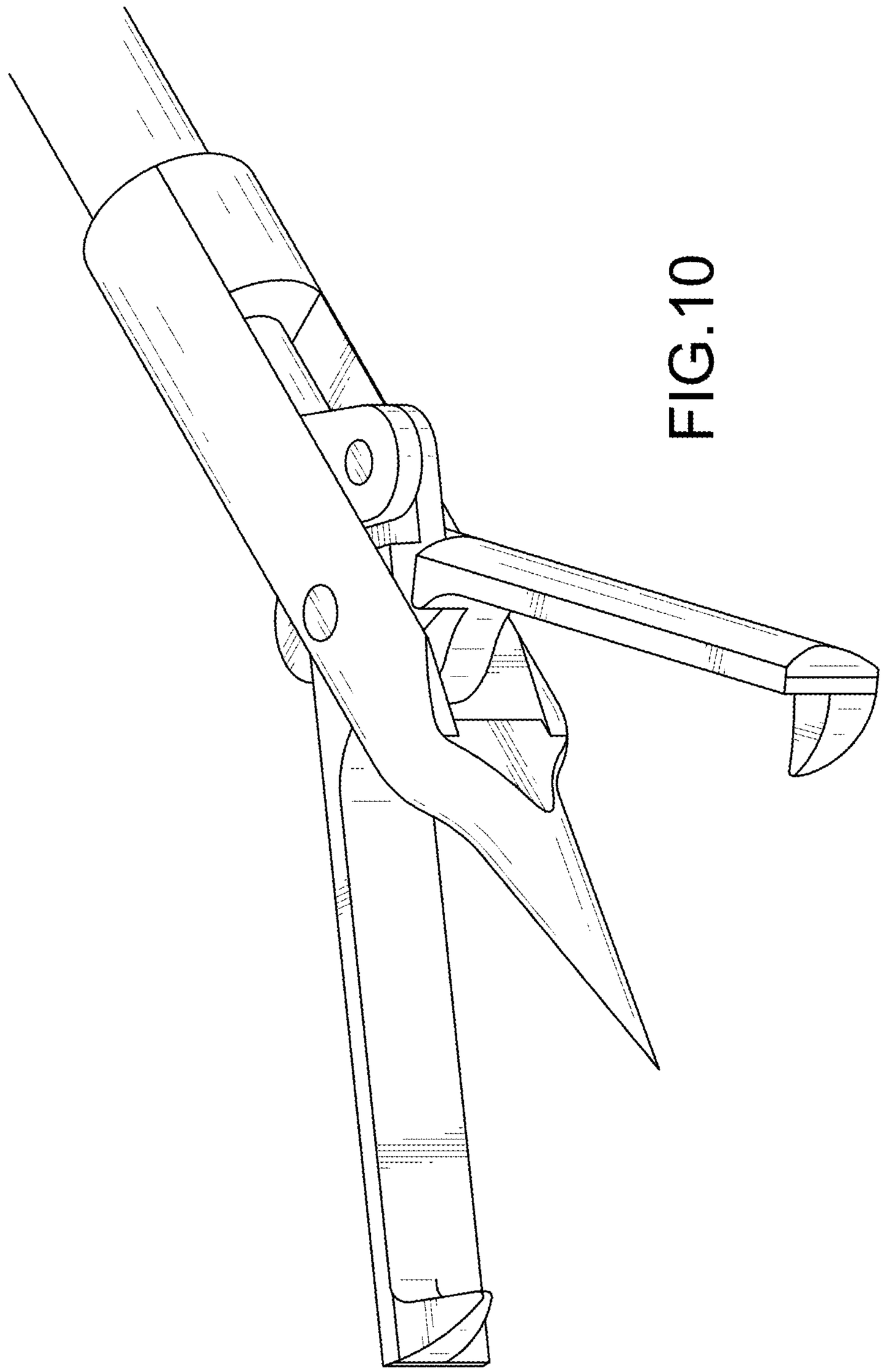

FIG.10

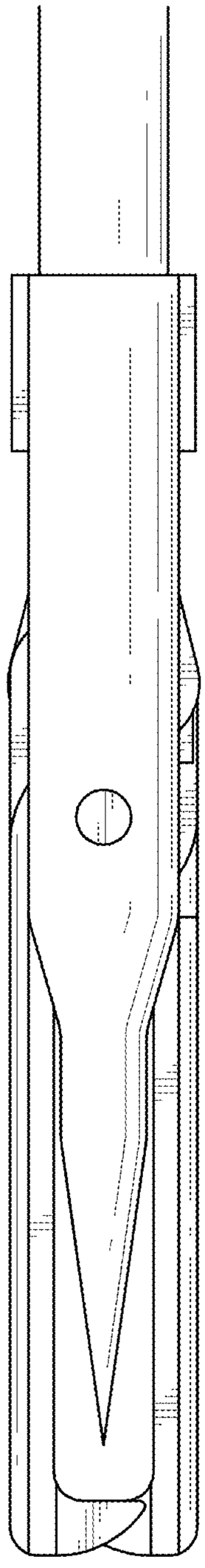

FIG.11

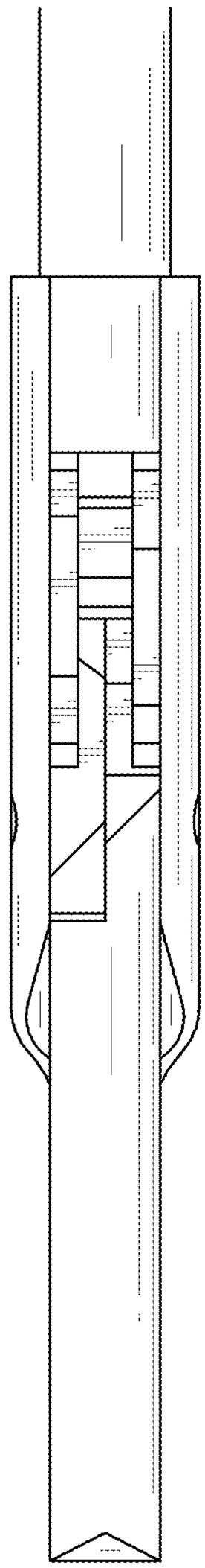

FIG.12

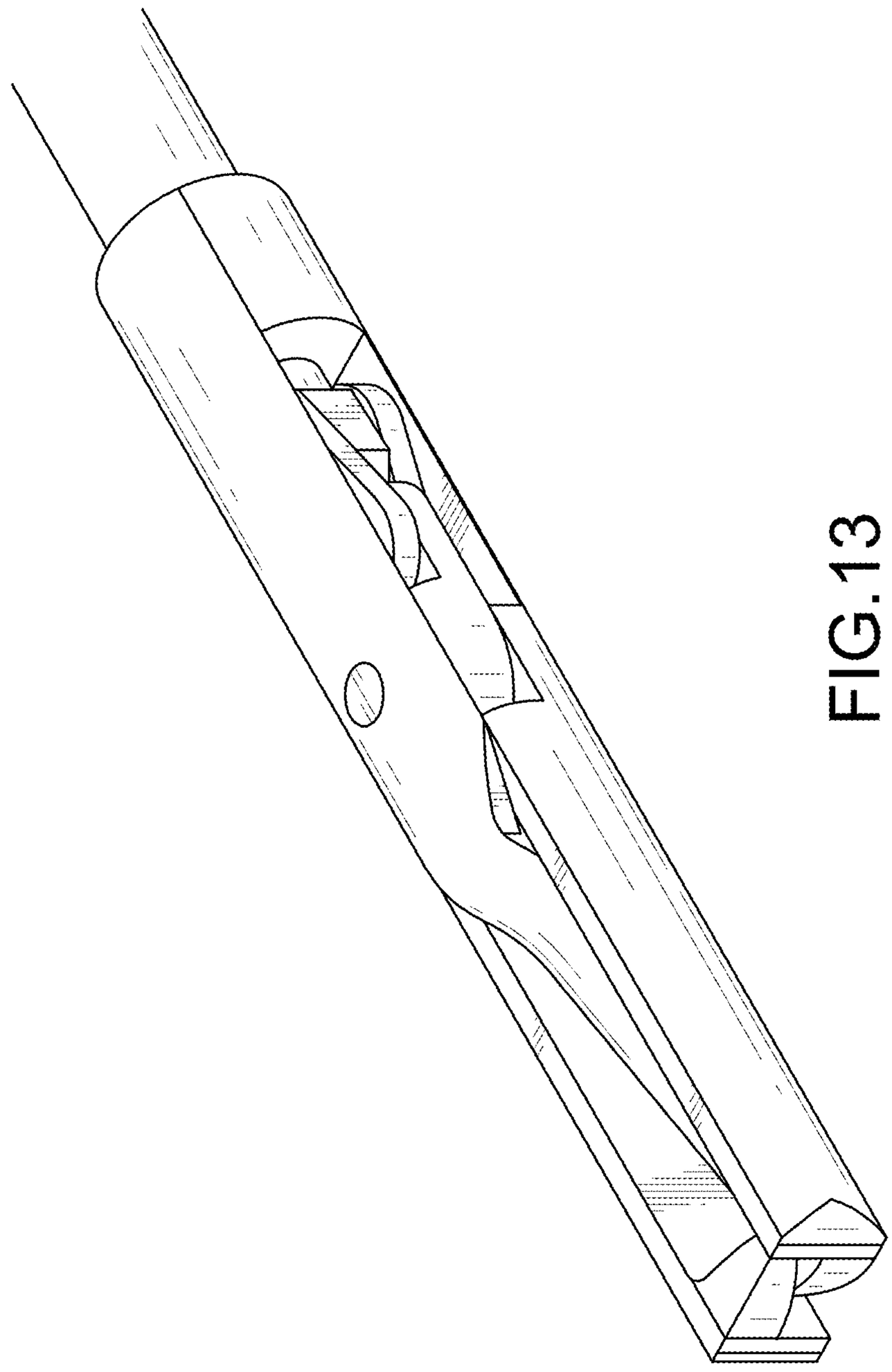

FIG.13