US00D752835S

(12) United States Design Patent

Wyse et al.

(10) Patent No.: US D752,835 S
(45) Date of Patent: ** Mar. 29, 2016

(54) **POWERED WHEELBARROW**

(71) Applicant: **Granite Industries, Inc.**, Archbold, OH (US)

(72) Inventors: **Steven J. Wyse**, Archbold, OH (US); **Brent A. Johnston**, West Unity, OH (US)

(73) Assignee: **Granite Industries, Inc.**, Archbold, OH (US)

(**) Term: **14 Years**

(21) Appl. No.: **29/510,176**

(22) Filed: **Nov. 25, 2014**

(51) **LOC (10) Cl.** **12-02**

(52) **U.S. Cl.**
USPC **D34/16**

(58) **Field of Classification Search**
USPC D34/12–27; 280/653, 33.997, 33.992, 280/33.991, 33.993, 47.18, 47.26, 47.34, 280/47.31, 47.15, 47.12, 47.131, 47.17
CPC B62B 1/18; B62B 1/20; B62B 1/208; B62B 1/002; B62B 1/10; B62B 1/14; B62B 1/204; B62B 1/22; B62B 1/00; B62B 1/16; B62B 1/206; B62B 5/00; B62B 5/067; B62B 5/068; B62B 5/0083; B62B 5/062; B62B 5/006
See application file for complete search history.

(56) **References Cited**

U.S. PATENT DOCUMENTS

2,800,335	A	*	7/1957	Clapp	B62B 1/208 280/42
3,045,847	A	*	7/1962	Fisher	B62B 1/18 280/47.31
3,690,692	A	*	9/1972	Florian et al.	B62B 1/208 220/6
3,722,904	A	*	3/1973	Puckett	B62B 1/208 280/47.31
D244,438	S	*	5/1977	Samuels	D34/16
D285,322	S	*	8/1986	Appel	D21/425
4,802,681	A	*	2/1989	Hung	B62B 1/002 280/47.18
5,350,030	A	*	9/1994	Mawhinney	B62B 1/24 180/19.3
D606,565	S	*	12/2009	Hickenbottom	D15/17
D608,517	S	*	1/2010	Rowlands	D34/16
D668,830	S	*	10/2012	Cooper	D34/16
D694,981	S	*	12/2013	Albert	D34/16
2012/0181762	A1	*	7/2012	Skijus	B60N 3/026 280/47.31
2015/0158515	A1	*	6/2015	Tabrizi	B62B 1/204 280/47.31

* cited by examiner

Primary Examiner — Cynthia Ramirez
(74) *Attorney, Agent, or Firm* — Hovey Williams LLP

(57) **CLAIM**

The ornamental design for a powered wheelbarrow, as shown and described.

DESCRIPTION

FIG. **1** is a front perspective view of a powered wheelbarrow embodying our design;
FIG. **2** is a rear perspective view of the powered wheelbarrow shown in FIG. **1**;
FIG. **3** is a front elevational view of the powered wheelbarrow shown in FIGS. **1** and **2**;
FIG. **4** is a left side elevational view of the powered wheelbarrow depicted in FIGS. **1-3**;
FIG. **5** is a rear elevational view of the powered wheelbarrow depicted in FIGS. **1-4**;
FIG. **6** is a right side elevational view of the powered wheelbarrow depicted in FIGS. **1-5**; and,
FIG. **7** is a top plan view of the powered wheelbarrow shown in FIGS. **1-6**.
The broken lines shown in the figures are included for the purpose of illustrating environment and form no part of the claimed design.

1 Claim, 7 Drawing Sheets

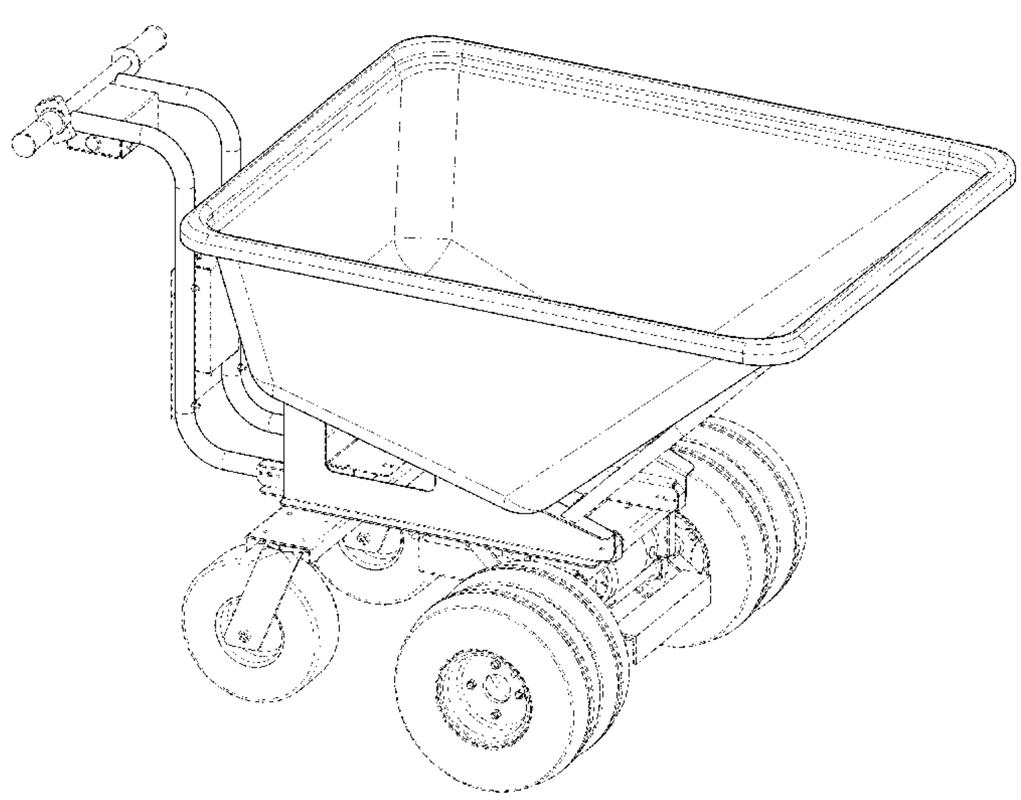

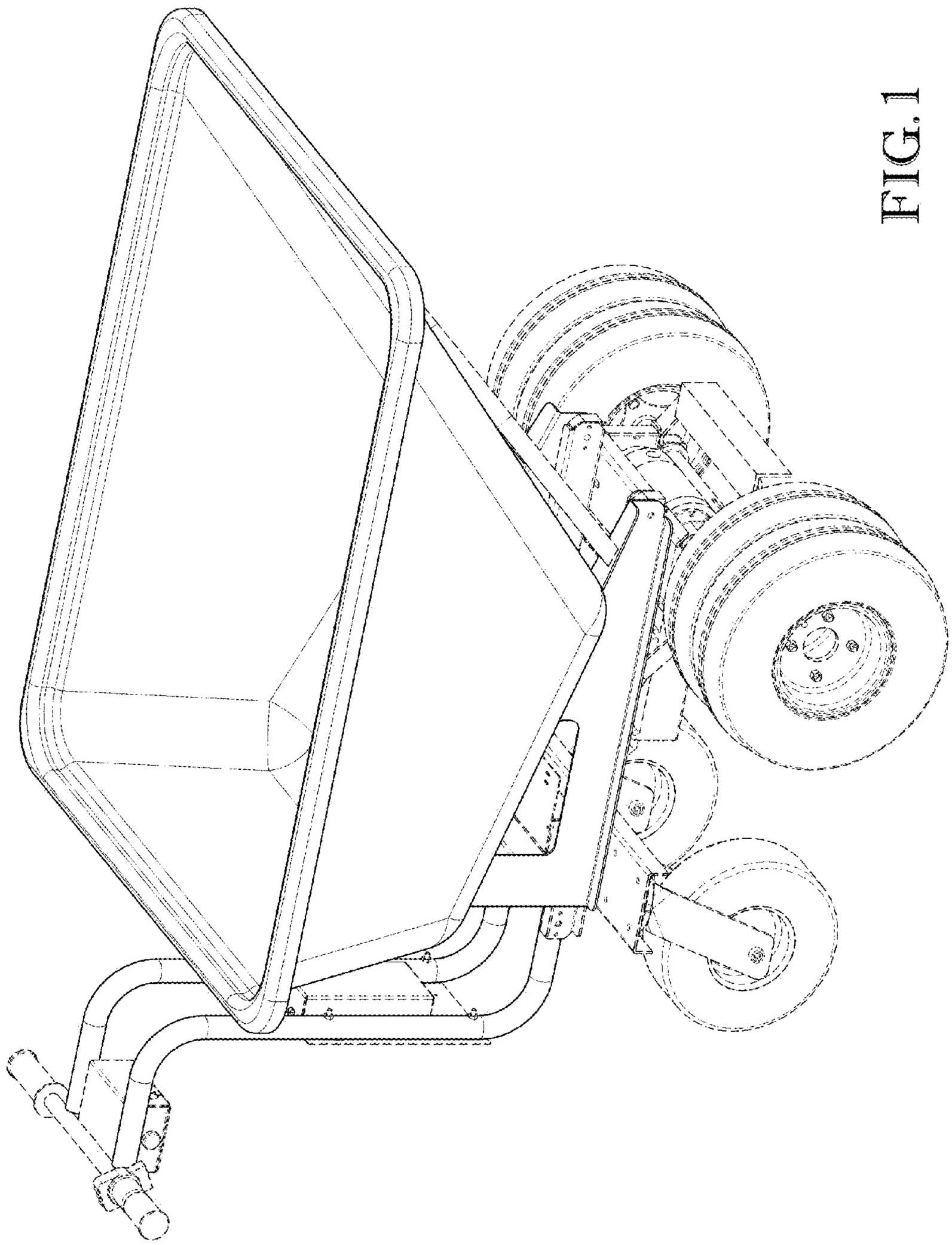

FIG. 1

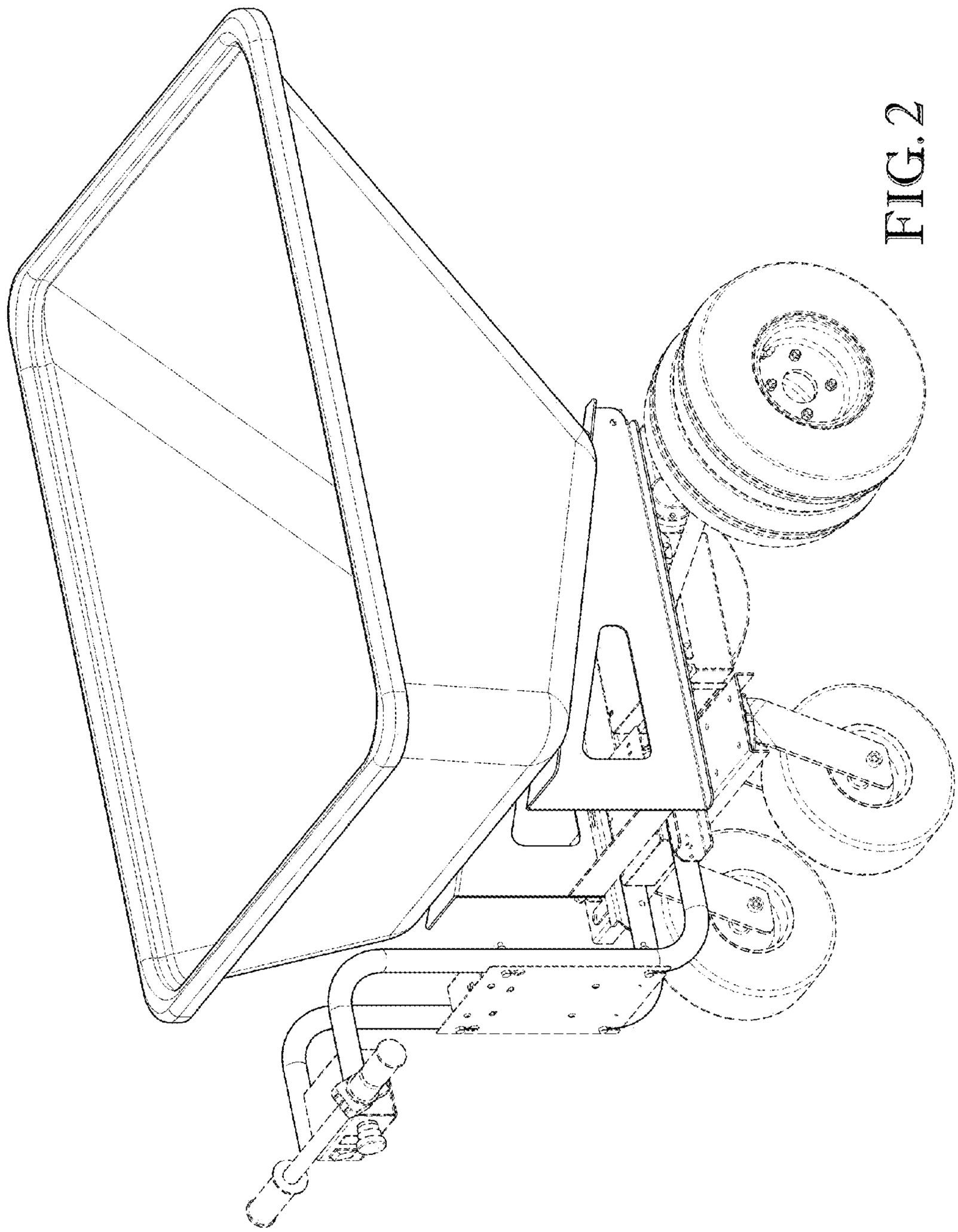

FIG. 2

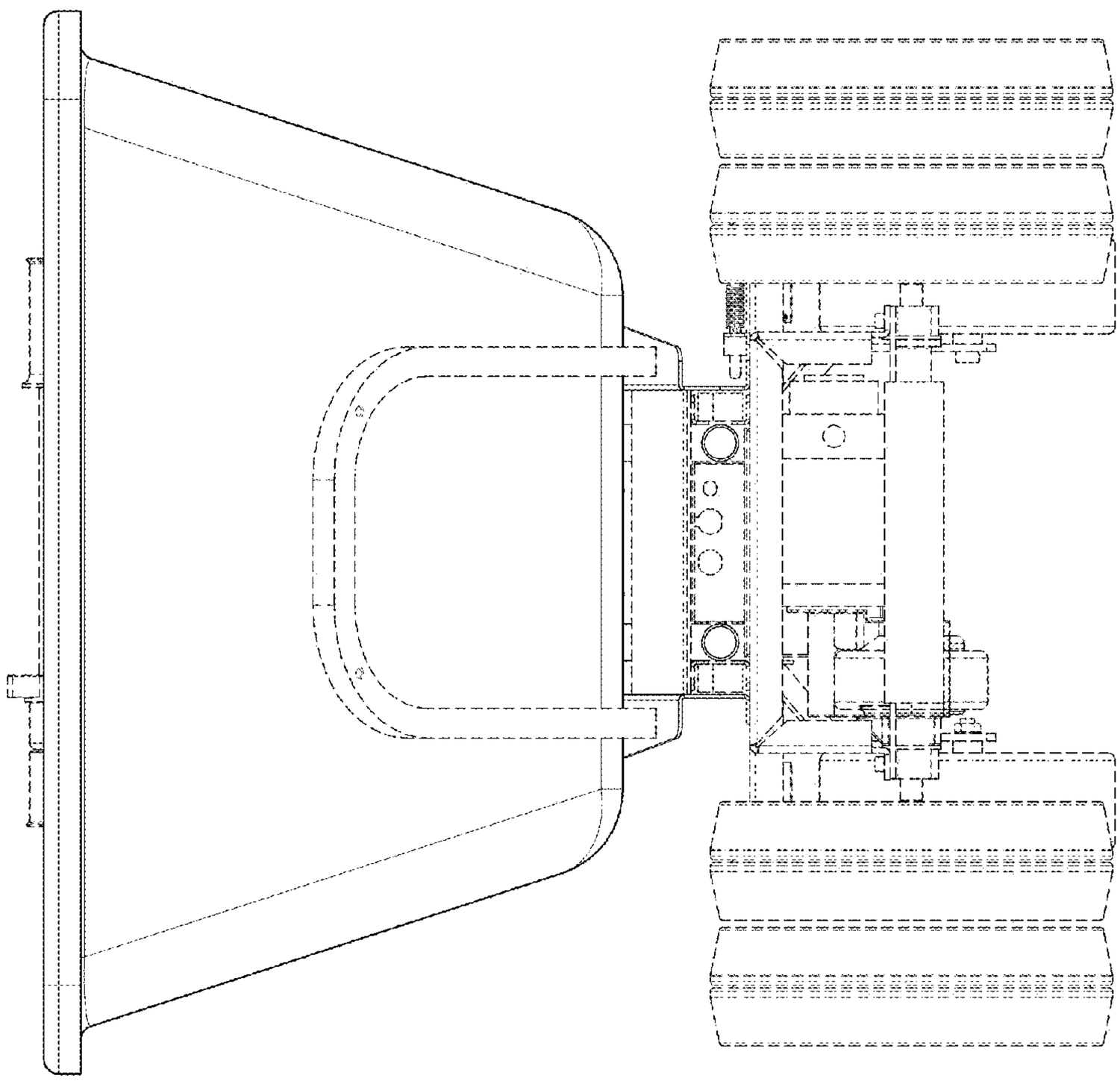

FIG. 3

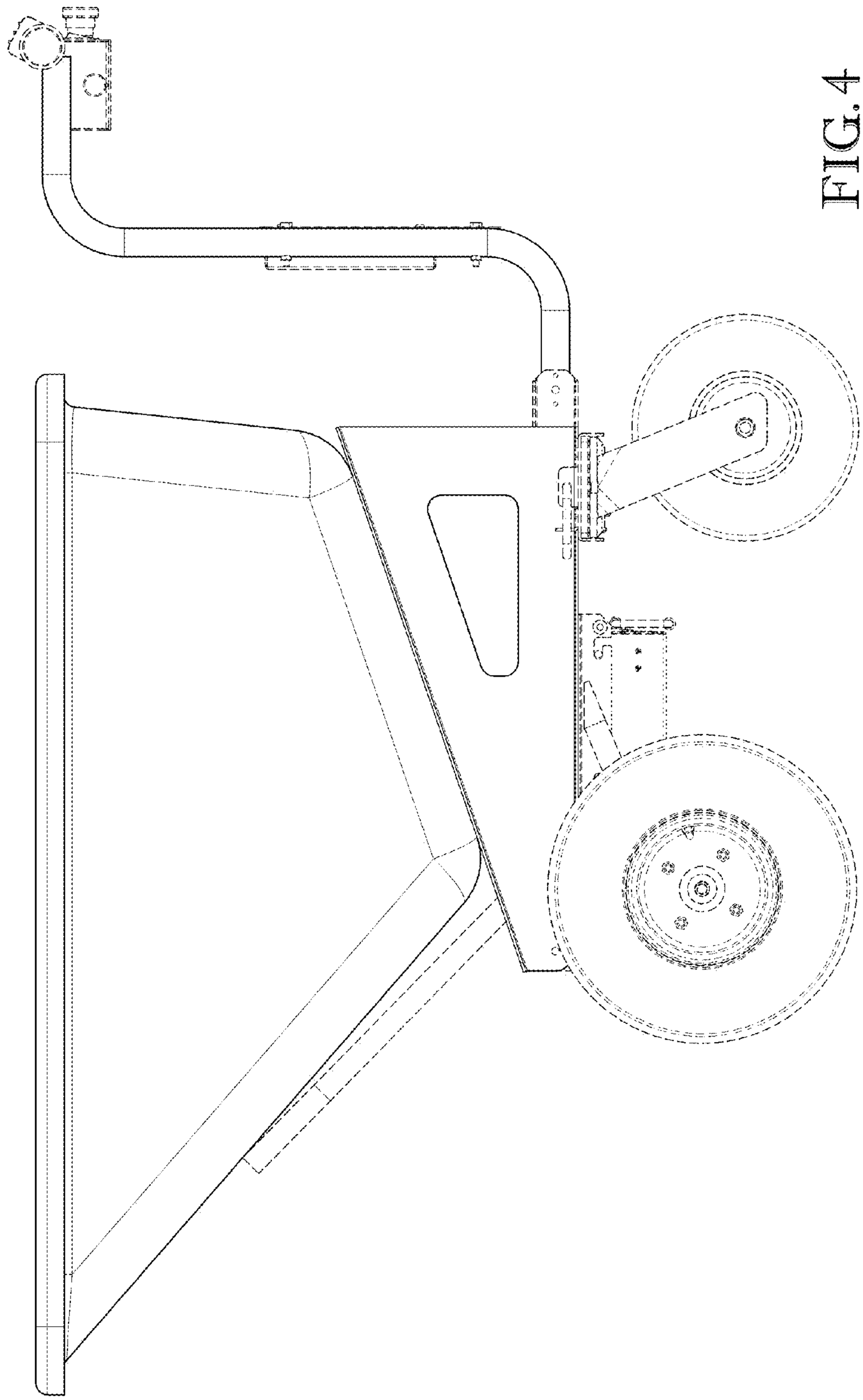

FIG. 4

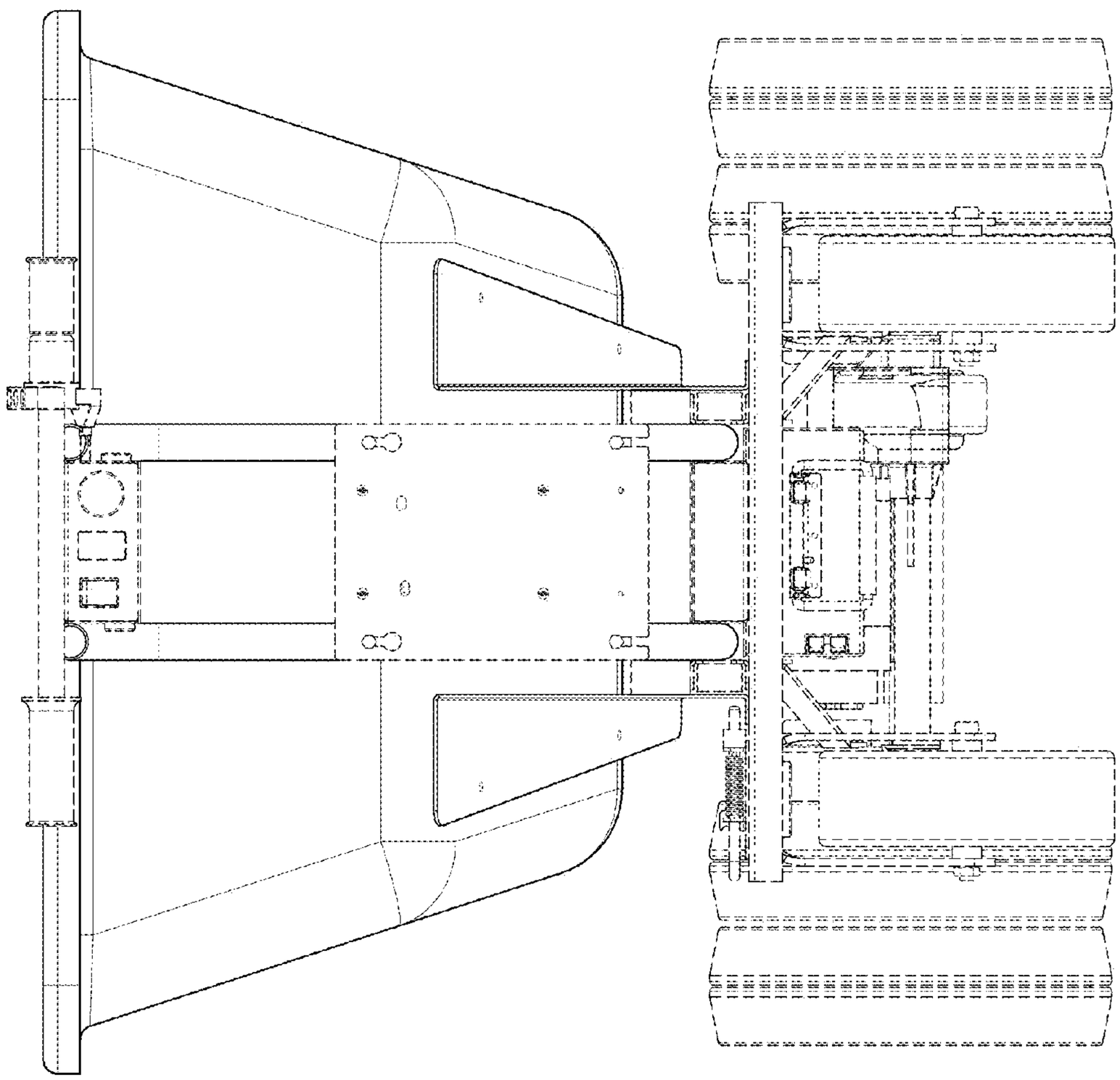

FIG. 5

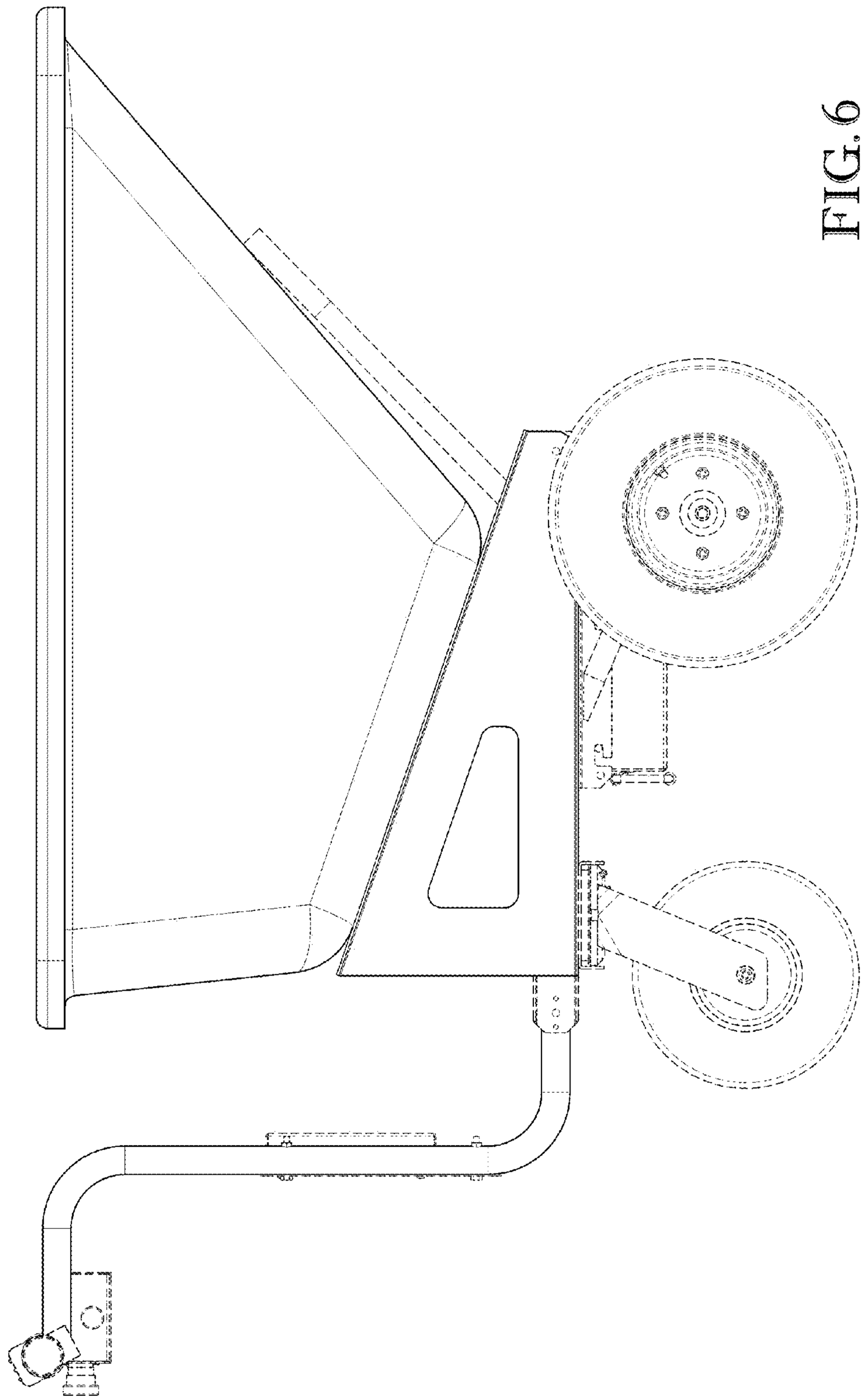

FIG. 6

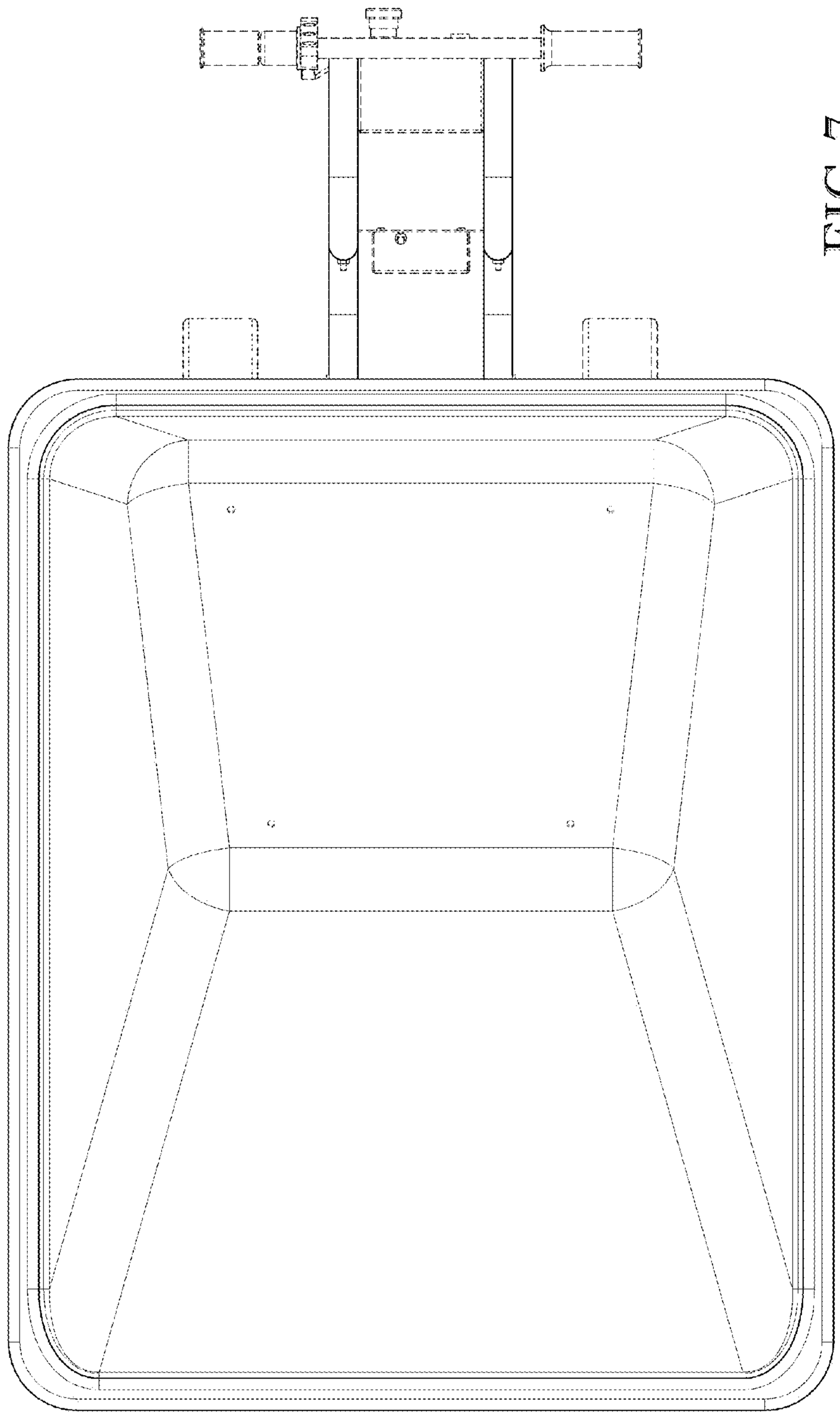

FIG. 7