US00D750232S

(12) United States Design Patent
Appelbaum et al.

(10) Patent No.: US D750,232 S
(45) Date of Patent: ** Feb. 23, 2016

(54) **PROBE HOLDER**

(71) Applicant: **Novian Health Inc.**, Chicago, IL (US)

(72) Inventors: **Henry R. Appelbaum**, Chicago, IL (US); **William F. Graveman**, Tonganoxie, KS (US); **Julian Itzcovitz**, Neuilly sur Seine (FR)

(73) Assignee: **Novian Health Inc.**, Chicago, IL (US)

(**) Term: **15 Years**

(21) Appl. No.: **29/527,322**

(22) Filed: **May 18, 2015**

Related U.S. Application Data

(62) Division of application No. 29/454,169, filed on May 7, 2013, now Pat. No. Des. 733,873.

(51) **LOC (10) Cl.** **24-02**

(52) **U.S. Cl.**
USPC **D24/128**

(58) **Field of Classification Search**
USPC D24/201–205; 601/6, 15, 64, 157–158, 601/30–32; 604/21; 600/407
See application file for complete search history.

(56) **References Cited**

U.S. PATENT DOCUMENTS

1,968,997	A	8/1934	Drucker
2,189,989	A	2/1940	Lichtman
3,753,657	A	8/1973	Downing et al.
4,222,375	A	9/1980	Martinez
4,402,311	A	9/1983	Hattori
4,559,942	A	12/1985	Eisenberg
4,616,656	A	10/1986	Nicholson et al.
4,662,368	A	5/1987	Hussein et al.
4,665,927	A	5/1987	Daily
4,681,122	A	7/1987	Winters et al.

(Continued)

FOREIGN PATENT DOCUMENTS

DE	2826383	12/1979
JP	2001148280	9/1989

(Continued)

OTHER PUBLICATIONS

Dowlatshahi, Kambiz, MD., et al. "Stereotactically Guided Laser Therapy of Occult Breast Tumors," published by ARCH SURG in Nov. 2000.

(Continued)

Primary Examiner — Ian Simmons
Assistant Examiner — Samantha Q Lawrence
(74) *Attorney, Agent, or Firm* — Neal, Gerber & Eisenberg LLP

(57) **CLAIM**

The ornamental design for a probe holder, as shown and described.

DESCRIPTION

FIG. **1** is a front perspective view of a probe holder of our new design;
FIG. **2** is a rear perspective view of the probe holder;
FIG. **3** is a front view of the probe holder;
FIG. **4** is a rear view of the probe holder;
FIG. **5** is a right side view of the probe holder;
FIG. **6** is a left side view of the probe holder;
FIG. **7** is a top plan view of the probe holder; and,
FIG. **8** is a bottom plan view of the probe holder.
The broken lines shown in FIGS. **1-8** illustrate portions of the probe holder that form no part of the claimed design.

1 Claim, 6 Drawing Sheets

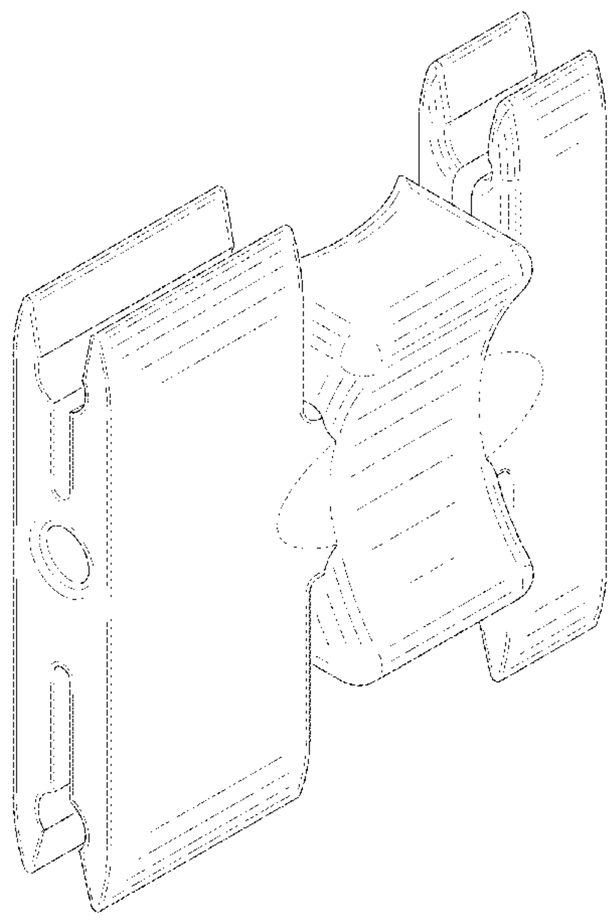

(56) **References Cited**

U.S. PATENT DOCUMENTS

4,744,627	A	5/1988	Chande et al.
4,773,413	A	9/1988	Hussein et al.
4,774,948	A	10/1988	Markham
4,776,334	A	10/1988	Prionas
4,819,630	A	4/1989	Dehart
4,880,122	A	11/1989	Martindell
4,883,062	A	11/1989	Nicholson
4,890,898	A	1/1990	Bentley et al.
4,920,978	A	5/1990	Colvin
4,931,059	A	6/1990	Markham
4,932,934	A	6/1990	Dougherty
4,946,440	A	8/1990	Hall
4,950,267	A	8/1990	Ishihara et al.
4,952,146	A	8/1990	Doty
4,957,481	A	9/1990	Gatenby
4,959,063	A	9/1990	Kojima
4,961,422	A	10/1990	Marchosky et al.
D311,954	S	11/1990	Kamen
4,967,765	A	11/1990	Turner et al.
5,019,075	A	5/1991	Spears et al.
5,050,597	A	9/1991	Daikuzono
5,059,197	A	10/1991	Urie et al.
5,061,265	A	10/1991	Abela et al.
5,078,142	A	1/1992	Siczek et al.
5,125,925	A	6/1992	Lundahl
5,127,916	A	7/1992	Spencer et al.
5,129,896	A	7/1992	Hasson
5,150,704	A	9/1992	Tatebayashi et al.
5,158,084	A	10/1992	Ghiatus
5,169,396	A	12/1992	Dowlatshahi et al.
5,178,148	A	1/1993	Lacoste et al.
5,178,164	A	1/1993	Allen
5,195,526	A	3/1993	Michelson
5,222,953	A	6/1993	Dowlatshahi
5,234,426	A	8/1993	Rank et al.
5,242,437	A	9/1993	Everett et al.
D344,464	S	2/1994	Kerschner
5,312,392	A	5/1994	Hofstetter et al.
5,323,779	A	6/1994	Hardy et al.
5,330,517	A	7/1994	Mordon et al.
5,386,447	A	1/1995	Siczek
5,396,897	A	3/1995	Jain et al.
5,398,899	A	3/1995	Austin et al.
RE34,936	E	5/1995	Campbell et al.
5,460,066	A	10/1995	Dennstedt
5,505,203	A	4/1996	Deitrich et al.
5,520,182	A	5/1996	Leighton et al.
5,569,240	A	10/1996	Dowlatshahi et al.
D375,450	S	11/1996	Bidwell et al.
5,615,430	A	4/1997	Nambu et al.
5,620,479	A	4/1997	Diederich
D383,968	S	9/1997	Bidwell
D391,838	S	3/1998	Bidwell et al.
5,735,264	A	4/1998	Siczek et al.
D397,790	S	9/1998	Naganuma
5,813,985	A	9/1998	Carroll
5,853,366	A	12/1998	Dowlatshahi
5,954,711	A	9/1999	Ozaki et al.
6,241,725	B1	6/2001	Cosman
D452,314	S	12/2001	Niermann
6,456,684	B1	9/2002	Mun et al.
6,500,343	B2	12/2002	Siddiqi
6,551,302	B1	4/2003	Rosinko et al.
6,569,176	B2	5/2003	Jesseph
6,603,988	B2	8/2003	Dowlatshahi
6,701,175	B2	3/2004	Dowlatshahi
6,755,849	B1	6/2004	Gowda et al.
6,865,412	B2	3/2005	Dowlatshahi
6,928,672	B2	8/2005	Pastyr et al.
7,041,109	B2	5/2006	Dowlatshahi
7,074,233	B1	7/2006	Gowda et al.
7,171,253	B2	1/2007	Dowlatshahi
7,270,656	B2	9/2007	Gowda et al.
7,274,847	B2	9/2007	Gowda et al.
D630,757	S	1/2011	Kitayama
D653,130	S	1/2012	Borovicka
8,092,507	B2	1/2012	Tomasello et al.
D674,506	S	1/2013	LaBrasca
D700,321	S	2/2014	Strong
D700,970	S	3/2014	Kim
D709,753	S	7/2014	Guala
D713,525	S	9/2014	Oguro et al.
D715,925	S	10/2014	Suzuki et al.
D733,873	S *	7/2015	Appelbaum D24/128
2002/0026127	A1	2/2002	Balbierz et al.
2003/0023236	A1	1/2003	Gowda et al.
2003/0060813	A1	3/2003	Loeb
2003/0236463	A1	12/2003	Mesaros et al.
2004/0215101	A1	10/2004	Rioux et al.
2005/0113641	A1	5/2005	Bala
2005/0165287	A1	7/2005	Wescott, III
2005/0169596	A1	8/2005	Hamasaki et al.
2006/0095096	A1	5/2006	DeBenedictis et al.
2006/0104593	A1	5/2006	Gowda et al.
2006/0155298	A1	7/2006	Mueller et al.
2006/0217693	A1	9/2006	Gowda et al.
2006/0241727	A1	10/2006	Dowlatshahi
2007/0100229	A1	5/2007	Dowlatshahi
2007/0119738	A1	5/2007	Clegg et al.
2007/0219544	A1	9/2007	Gowda et al.
2008/0015560	A1	1/2008	Gowda et al.
2008/0114340	A1	5/2008	Fox et al.
2009/0036982	A1	2/2009	Aharoni et al.

FOREIGN PATENT DOCUMENTS

WO	WO8704611	8/1987
WO	WO0013603	3/2000
WO	WO0059394	10/2000
WO	WO03011160	2/2003
WO	WO2005046753	5/2005
WO	WO2006055554	5/2006

OTHER PUBLICATIONS

Dowlatshahi, Kambiz, MD., "Laser Therapy of Small Breast Cancers." Presented at the Third Annual Meeting of the American Society of Breast Surgeons, Apr. 24-28, 2002. 152-166.

Dowlatshahi, Kambiz, MD., "Interstitial Laser Treatment of Small Breast Cancers," *Lasers in Medicine, Surgery, and Dentistry*. 2003. 677-689.

Dowlatshahi, Kambiz, MD., et al. "Laser Therapy of Breast Cancer with 3-Year Follow-up." *The Breast Journal*, vol. 10, No. 3, 2004. 240-243.

Dowlatshahi, Kambiz, MD., "Shift in the Surgical Treatment of Non-Palpable Breast Cancer: Tactile to Visual." *Rush University Medical Center*. Breast Cancer Online <http://www.bco.org>, Oct. 9, 2005, 1-10.

Kelsey. "Revolutionizing Breast Treatment with Interstitial Laser Therapy." May 2003. 1-22.

Kelsey. "Revolutionizing Breast Treatment with Interstitial Laser Therapy." Feb. 2005. 1-18.

* cited by examiner

FIG. 1

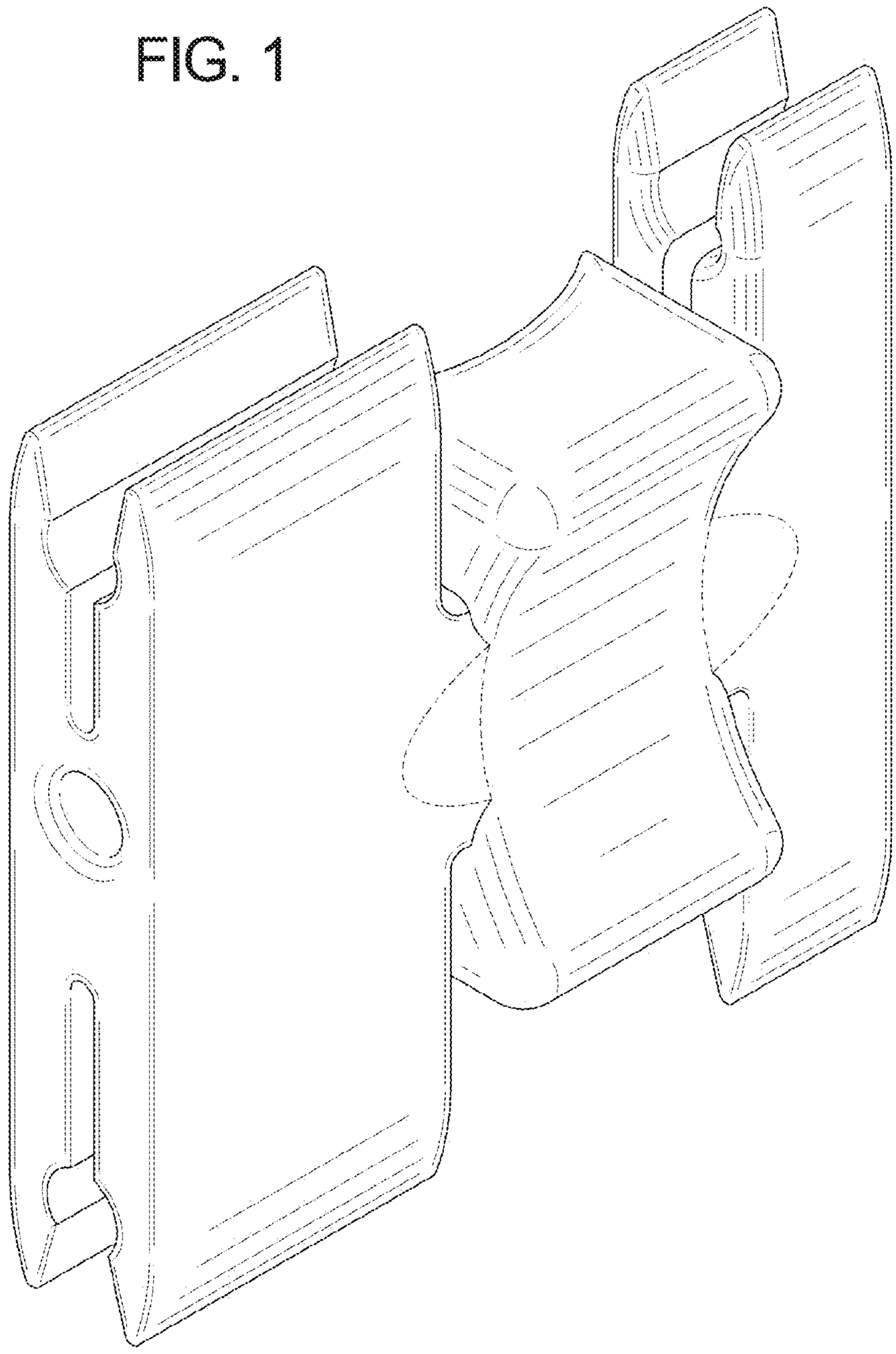

FIG. 2

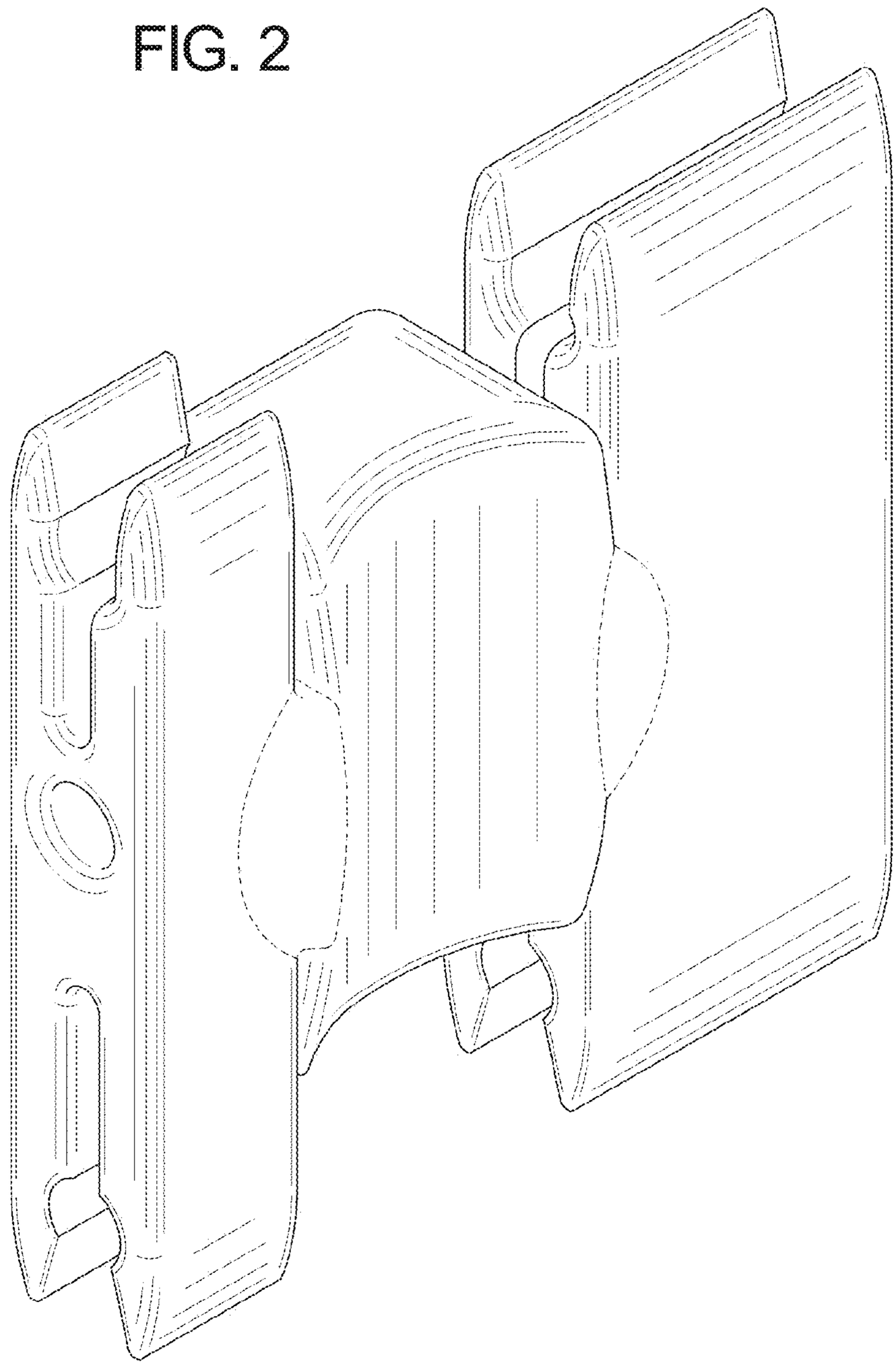

FIG. 3

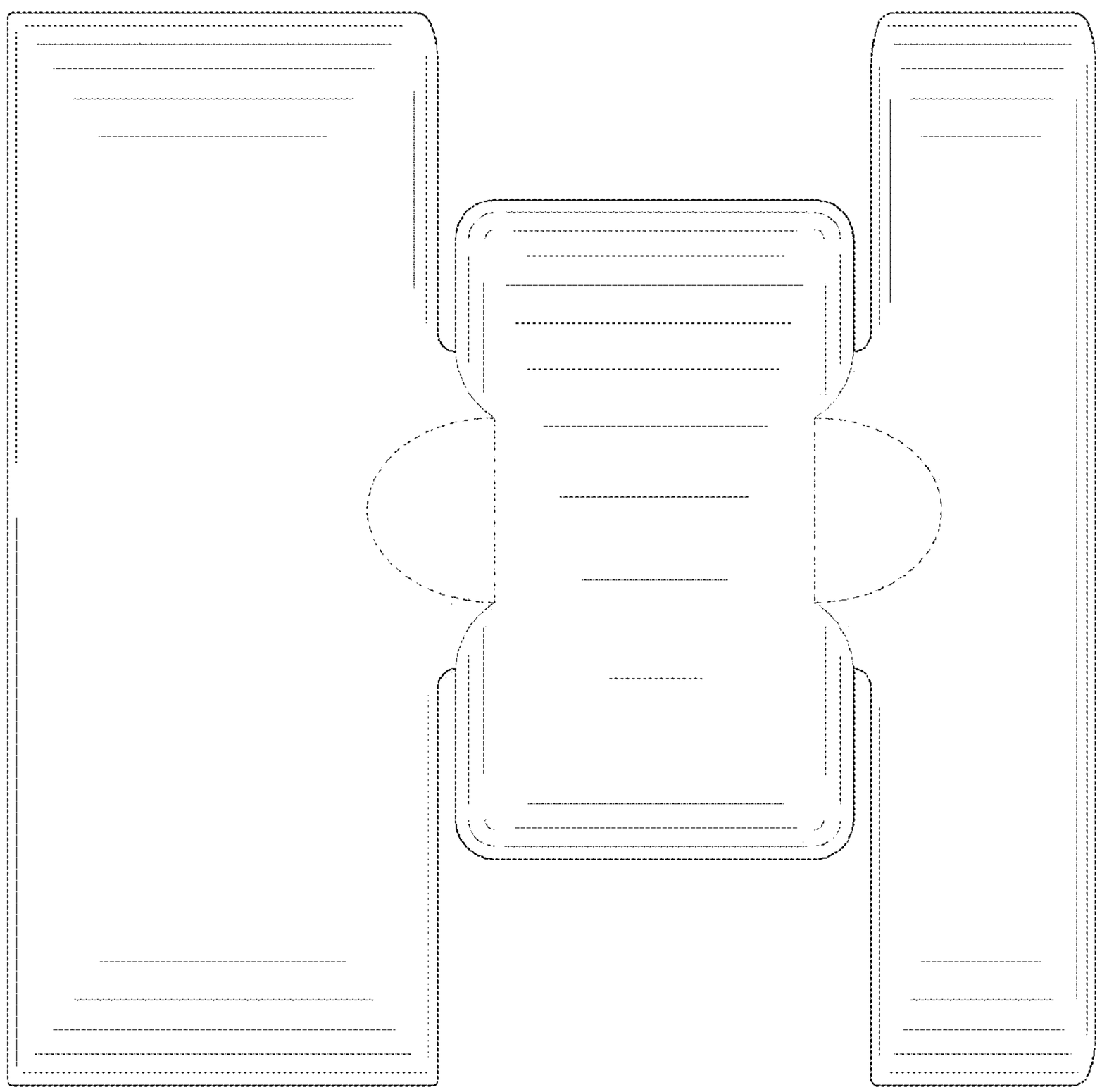

FIG. 4

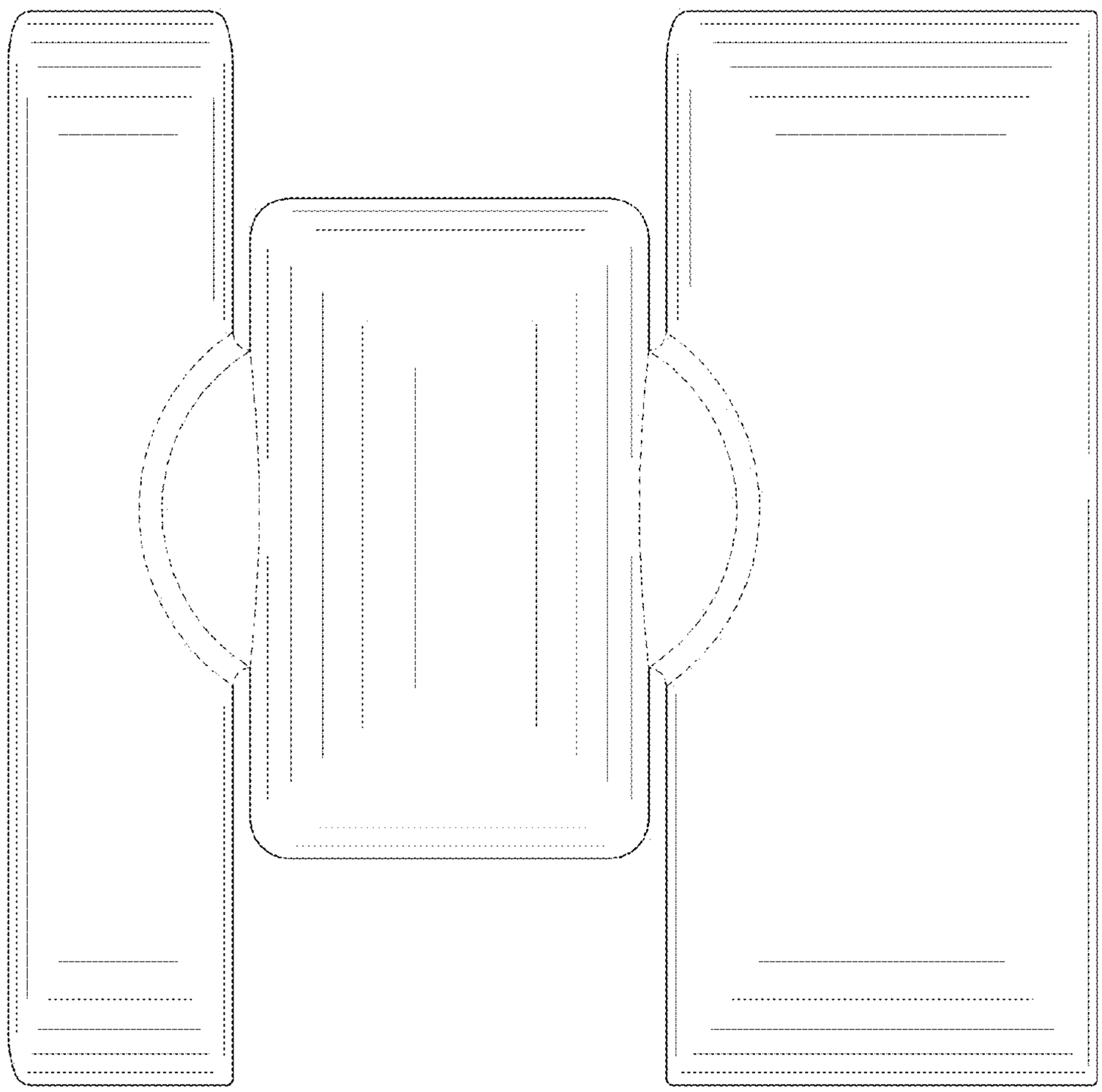

FIG. 5

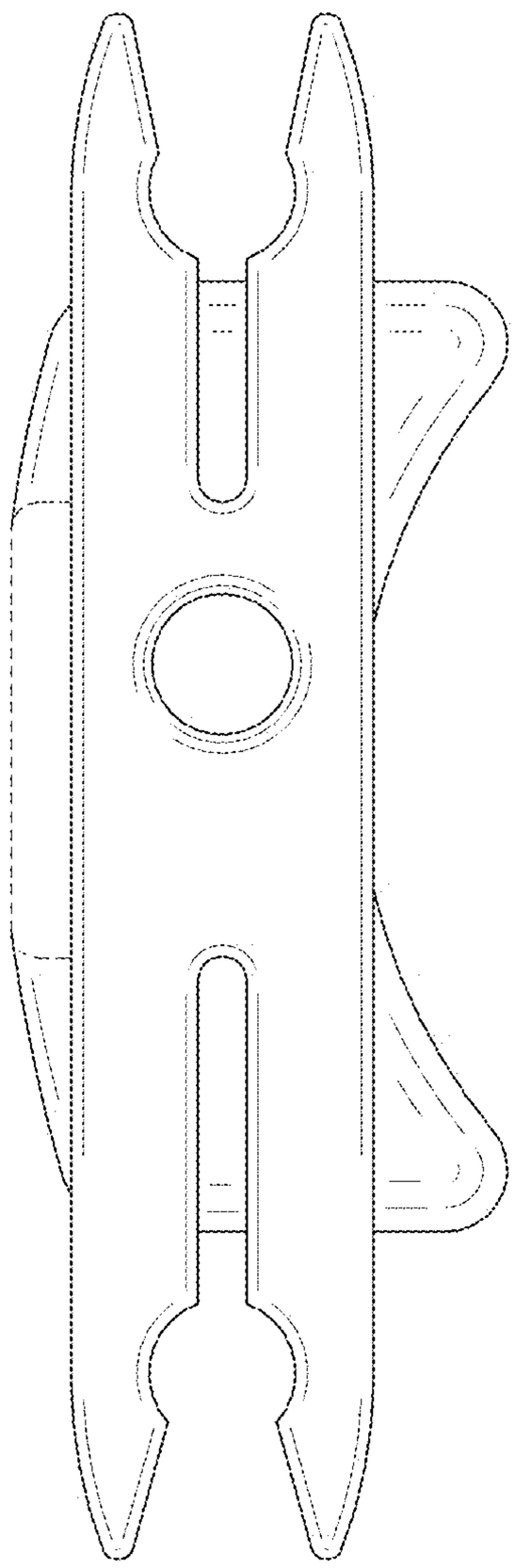

FIG. 6

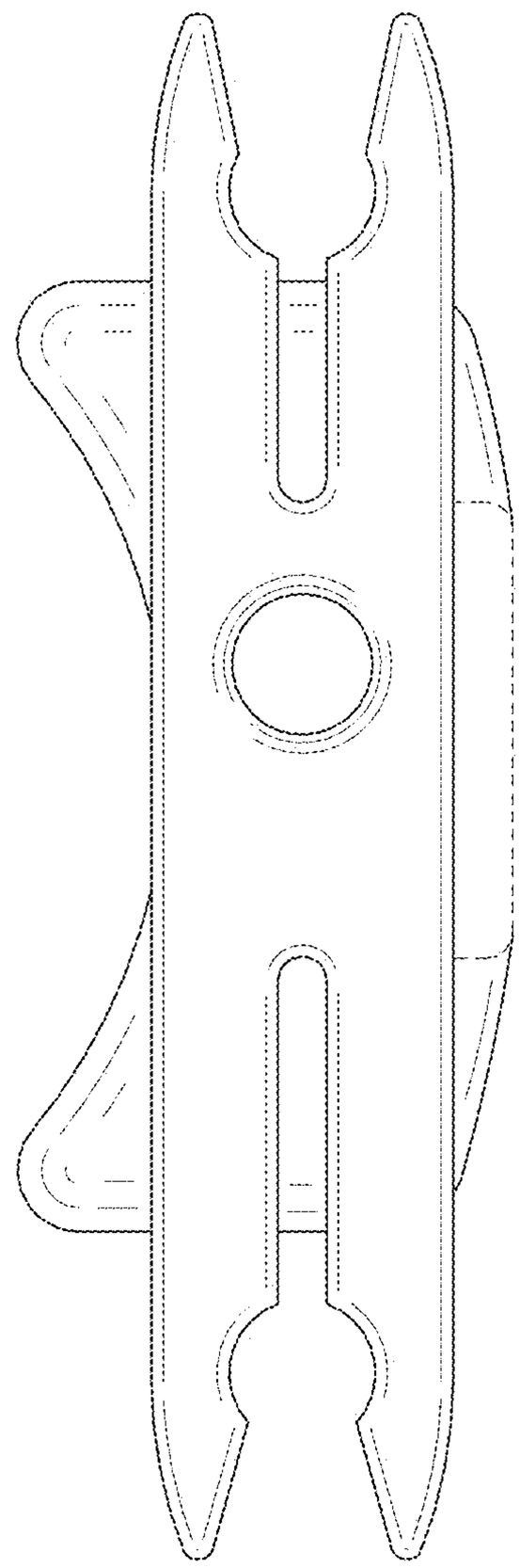

FIG. 7

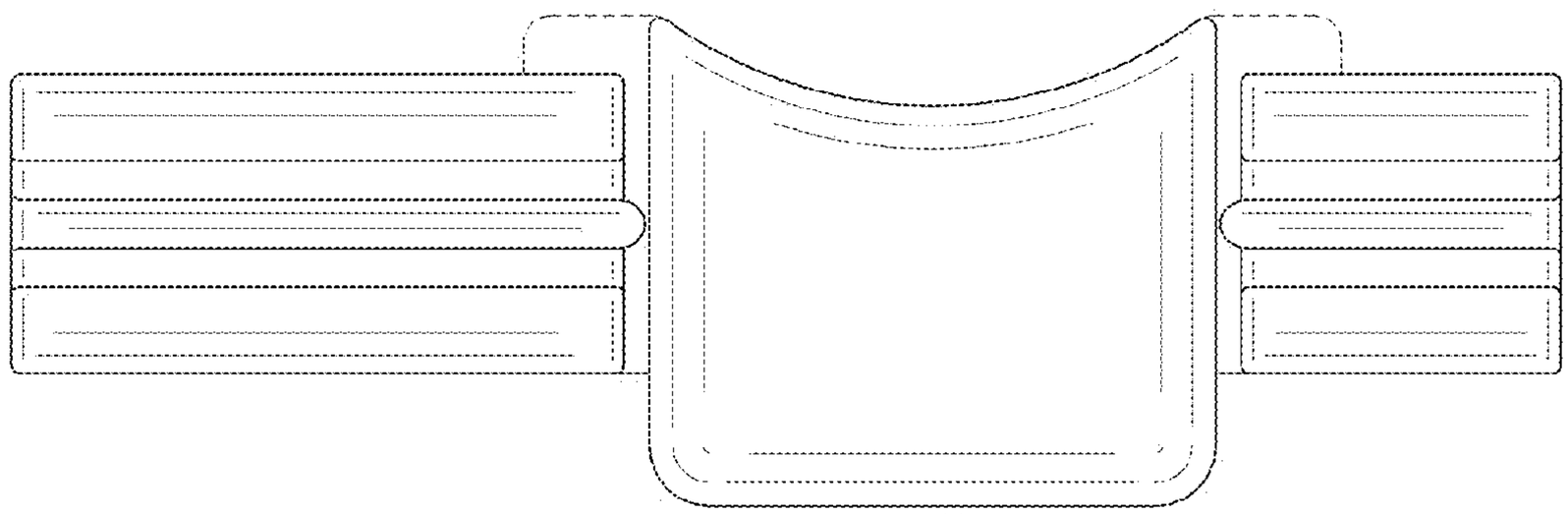
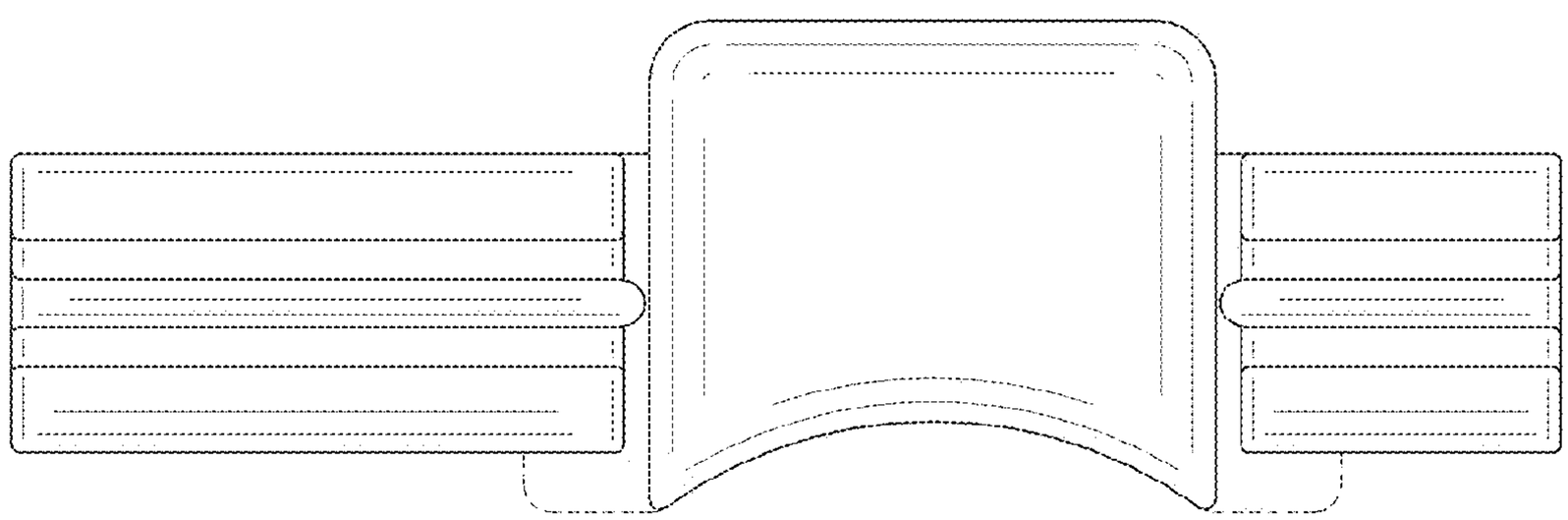
FIG. 8