US00D750150S

(12) United States Design Patent
Cho

(10) Patent No.: US D750,150 S
(45) Date of Patent: ** Feb. 23, 2016

(54) **CAMERA**

(71) Applicant: **Samsung Electronics Co., Ltd.**, Suwon-si (KR)

(72) Inventor: **Chang-Sin Cho**, Seoul (KR)

(73) Assignee: **Samsung Electronics Co., Ltd.**, Suwon-si (KR)

(**) Term: **14 Years**

(21) Appl. No.: **29/495,426**

(22) Filed: **Jul. 1, 2014**

(30) **Foreign Application Priority Data**

Jan. 9, 2014 (KR) 30-2014-0001388

(51) **LOC (10) Cl.** **16-05**

(52) **U.S. Cl.**
USPC **D16/219**

(58) **Field of Classification Search**
USPC D16/134, 136, 200, 202–205, 208, D16/217–219; 348/360, 373–376; 359/826–828; 396/25, 505, 529–532, 396/535, 539–541
CPC G03B 17/02; G03B 19/04; G03B 17/56; G03B 17/04; G03B 15/03; G03B 17/14; H04N 5/2251; H04N 5/2252; H04N 5/2253; H04N 5/2254; G02B 7/02; G02B 7/04; G02B 7/14
See application file for complete search history.

(56) **References Cited**

U.S. PATENT DOCUMENTS

D411,218 S * 6/1999 Kumakura D16/217
D439,922 S * 4/2001 Kumakura D16/217
D470,879 S * 2/2003 Morishita D16/217
7,182,529 B2 * 2/2007 Kurosawa G03B 19/12 348/374
D555,693 S * 11/2007 Tokiwa D16/134
7,567,290 B2 * 7/2009 Tokiwa G03B 17/14 348/335
7,620,315 B2 * 11/2009 Watanabe H04N 5/2254 396/268
D609,730 S * 2/2010 Nakamura D16/202
D611,976 S * 3/2010 Kim D16/202
D669,930 S * 10/2012 Koyama D16/134
D682,910 S * 5/2013 Hasuda D16/219
D723,084 S * 2/2015 Awazu D16/219
D738,417 S * 9/2015 Lee D16/202

(Continued)

FOREIGN PATENT DOCUMENTS

JP 1413576-000 5/2011

OTHER PUBLICATIONS

Lumix DMC-GF2 Body-Silver. CameraJungle.co.uk[online]. Prior Art [retrieved on Sep. 28, 2015]. Retrieved from the Internet: <http://www.camerajungle.co.uk/item/201129/panasonic-lumix-dmc-gf2-body-silver-compact-system.html>.*

(Continued)

Primary Examiner — Adir Aronovich
Assistant Examiner — Ramzi Almatrahi
(74) *Attorney, Agent, or Firm* — NSIP Law

(57) **CLAIM**

I claim the ornamental design for a camera, as shown and described.

DESCRIPTION

FIG. **1** is a front perspective view of a camera showing my new design;
FIG. **2** is a front view thereof;
FIG. **3** is a rear view thereof;
FIG. **4** is a left-side view thereof;
FIG. **5** is a right-side view thereof;
FIG. **6** is a top view thereof; and,
FIG. **7** is a bottom view thereof.
The broken lines in the figures show portions of the camera which are for environmental purpose only and form no part of the claimed design.

1 Claim, 4 Drawing Sheets

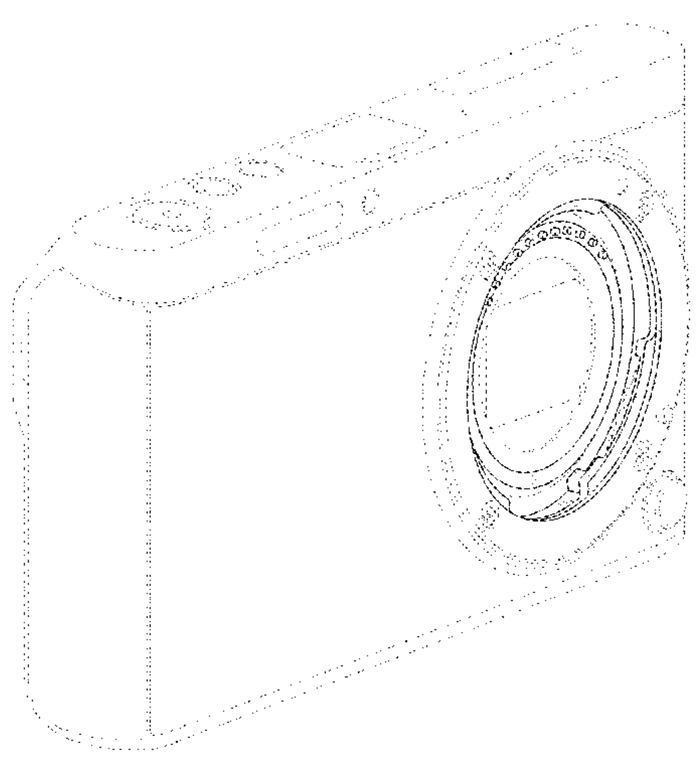

(56) **References Cited**

U.S. PATENT DOCUMENTS

2010/0111517	A1*	5/2010	Yasuda	G03B 17/00 396/532
2013/0266304	A1*	10/2013	Nishio	G03B 17/565 396/532
2014/0111686	A1*	4/2014	Iikawa	G03B 17/14 348/374

OTHER PUBLICATIONS

Korean Office Action issued Sep. 18, 2014 in corresponding Korean Design Patent Application No. 30-2014-0001388 (5 pages, in Korean).

* cited by examiner

FIG. 1

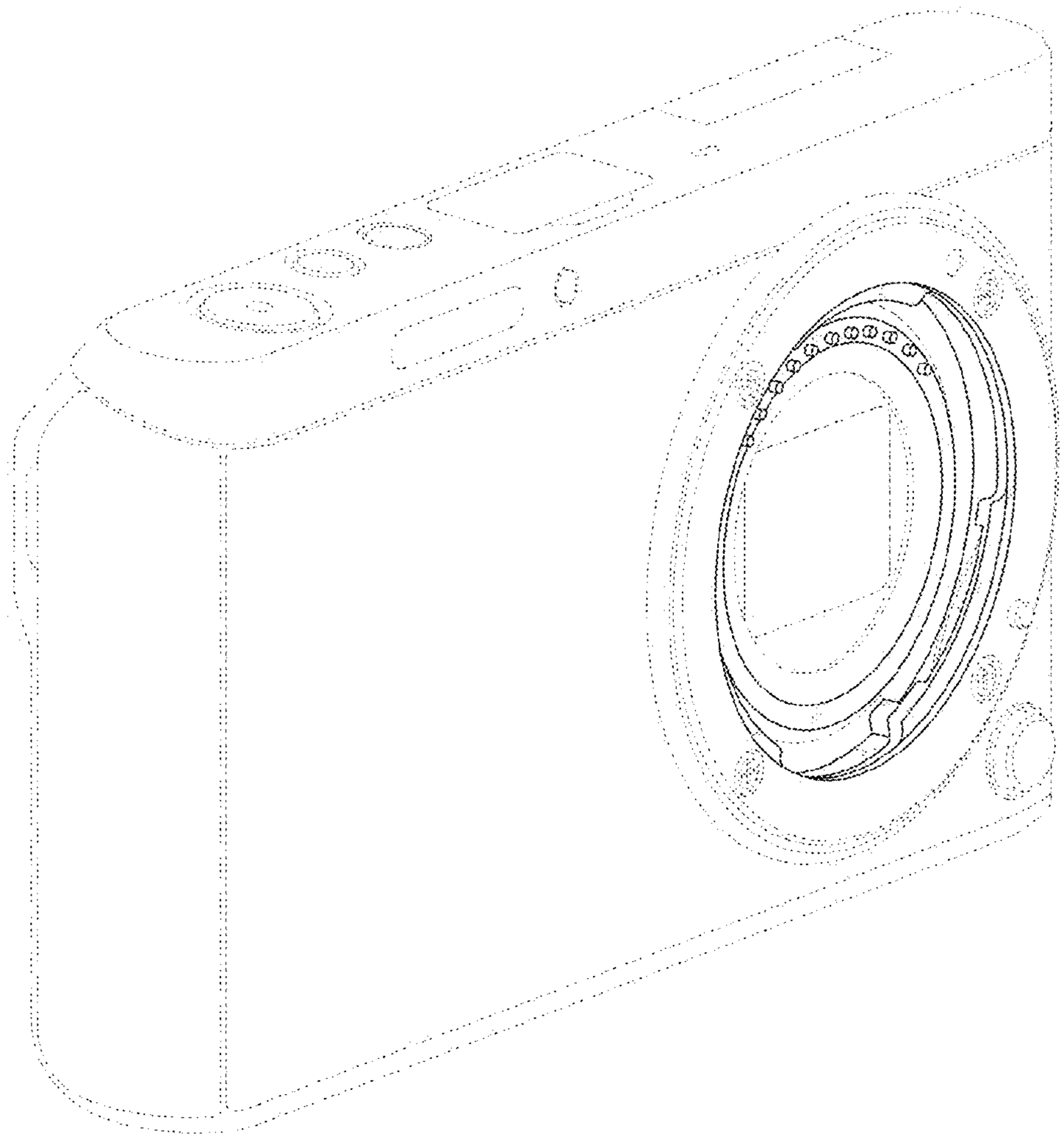

FIG.2

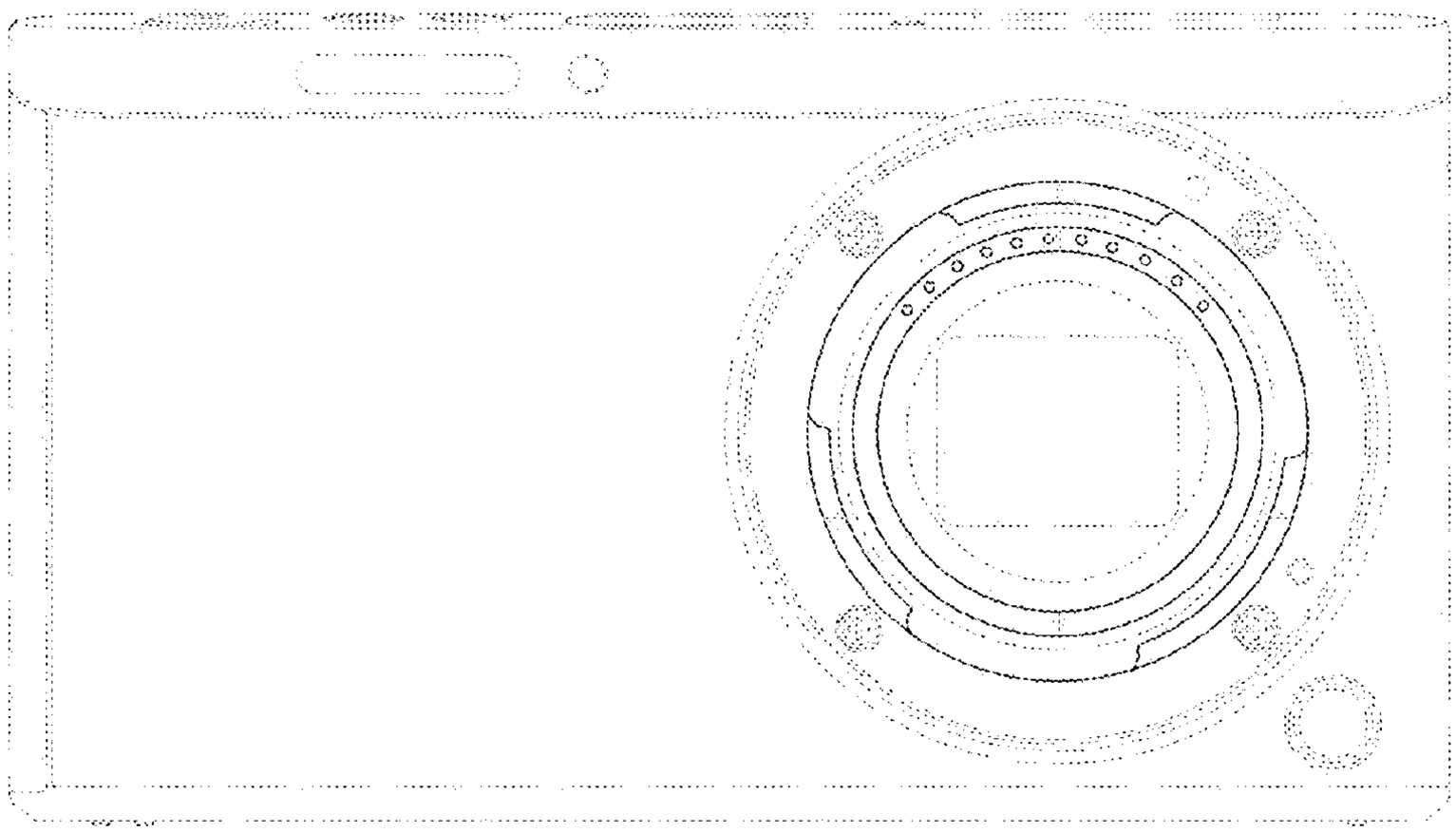

FIG.3

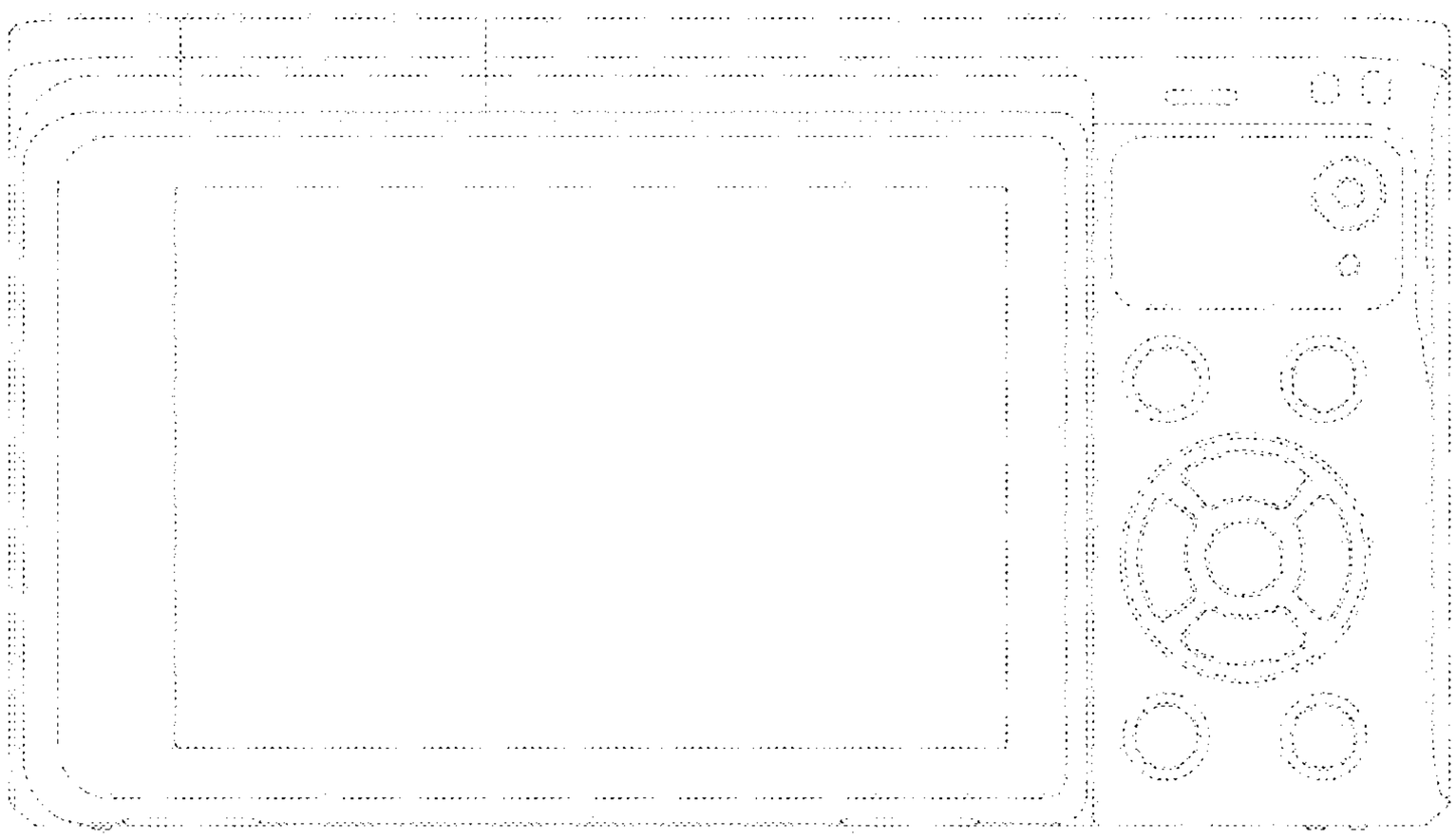

FIG. 4

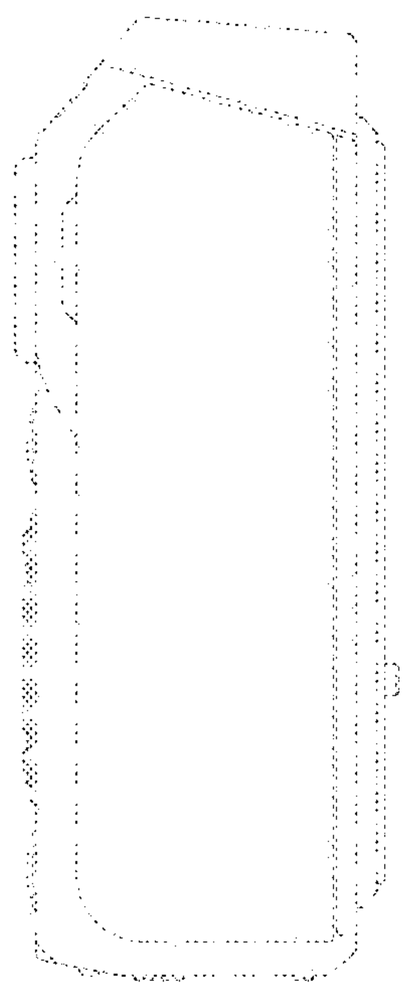

FIG. 5

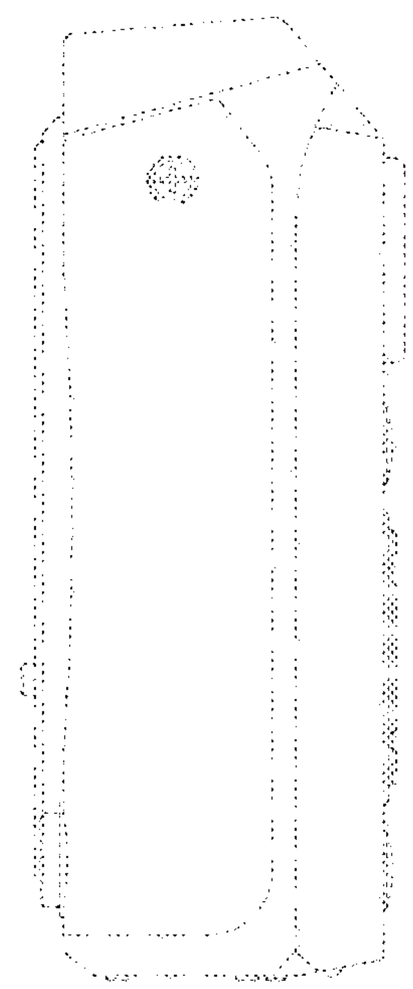

FIG. 6

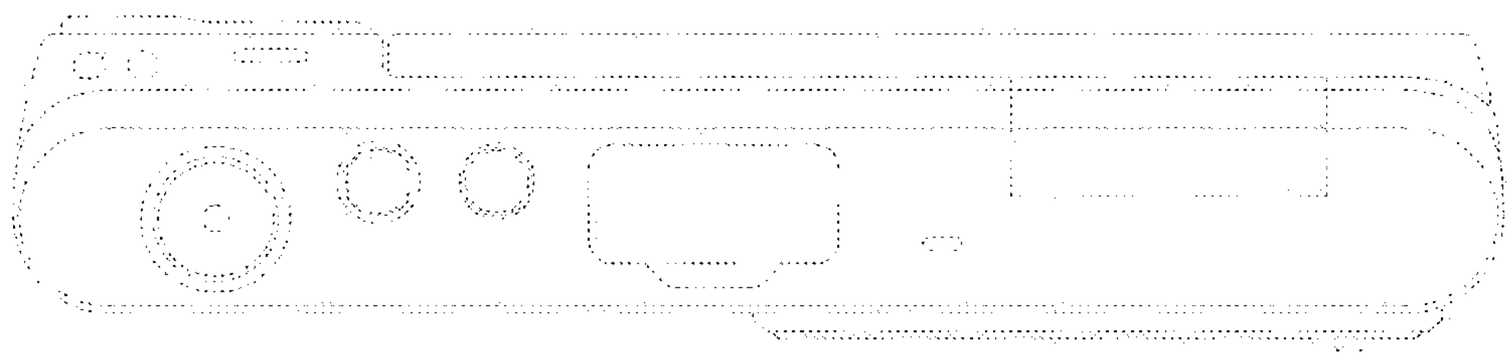
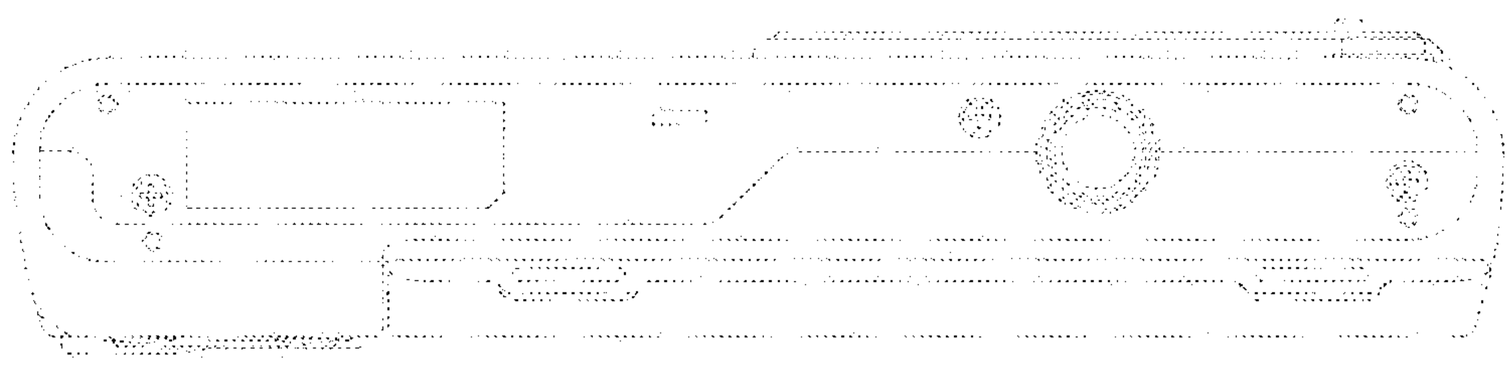
FIG. 7