US00D749813S

(12) United States Design Patent

Nyholm

(10) Patent No.: US D749,813 S
(45) Date of Patent: ** Feb. 16, 2016

(54) **RETAINER FOR TROLLEYS**

(71) Applicant: **Thomas Nyholm**, Soderkulla (FI)

(72) Inventor: **Thomas Nyholm**, Soderkulla (FI)

(73) Assignee: **K. Hartwell Oy Ab**, Soderkulla (FI)

(**) Term: **14 Years**

(21) Appl. No.: **29/500,336**

(22) Filed: **Aug. 25, 2014**

(30) **Foreign Application Priority Data**

Feb. 26, 2014 (EP) 002413286-0004

(51) **LOC (10) Cl.** **12-02**

(52) **U.S. Cl.**
USPC **D34/27**

(58) **Field of Classification Search**
USPC D34/12–27; D25/136, 126, 122, 121, D25/199, 120, 123, 125; 280/33.991, 280/33.992, 33.993; 224/273, 277, 42.43, 224/411, 572; D19/52, 78, 84, 88, 90; 281/42, 45; 40/308, 27, 530; 297/473, 297/256.17
CPC B65B 3/1428; B65B 3/1444; B65B 3/1416
See application file for complete search history.

(56) **References Cited**

U.S. PATENT DOCUMENTS

4,742,943	A *	5/1988	Trubiano	B26B 3/1428	224/277
4,949,997	A *	8/1990	Champagne	G09F 5/04	281/42
D377,255	S *	1/1997	Rehrig	D34/27	
D411,904	S *	7/1999	Risholm	D34/27	
D443,968	S *	6/2001	Porter	D34/27	
D445,231	S *	7/2001	Porter	D34/27	
D523,207	S *	6/2006	Tucker	D34/27	
D588,774	S *	3/2009	Peota	D34/27	
D667,603	S *	9/2012	Walter	D34/27	
D696,483	S *	12/2013	Otterlee	D34/27	
2013/0257123	A1*	10/2013	Kraus	B62B 3/144	297/256.17

* cited by examiner

Primary Examiner — Cynthia Ramirez
Assistant Examiner — Gino Colan
(74) *Attorney, Agent, or Firm* — McCormick, Paulding & Huber LLP

(57) **CLAIM**

The ornamental design for a retainer for trolleys, as shown and described.

DESCRIPTION

FIG. **1** is a rear, top, and right perspective view of the retainer for trolleys showing my new design;
FIG. **2** is a rear elevational view thereof;
FIG. **3** is a bottom plan view thereof;
FIG. **4** is a top plan view thereof;
FIG. **5** is a right elevational view thereof; and,
FIG. **6** is a left elevational view thereof.

1 Claim, 6 Drawing Sheets

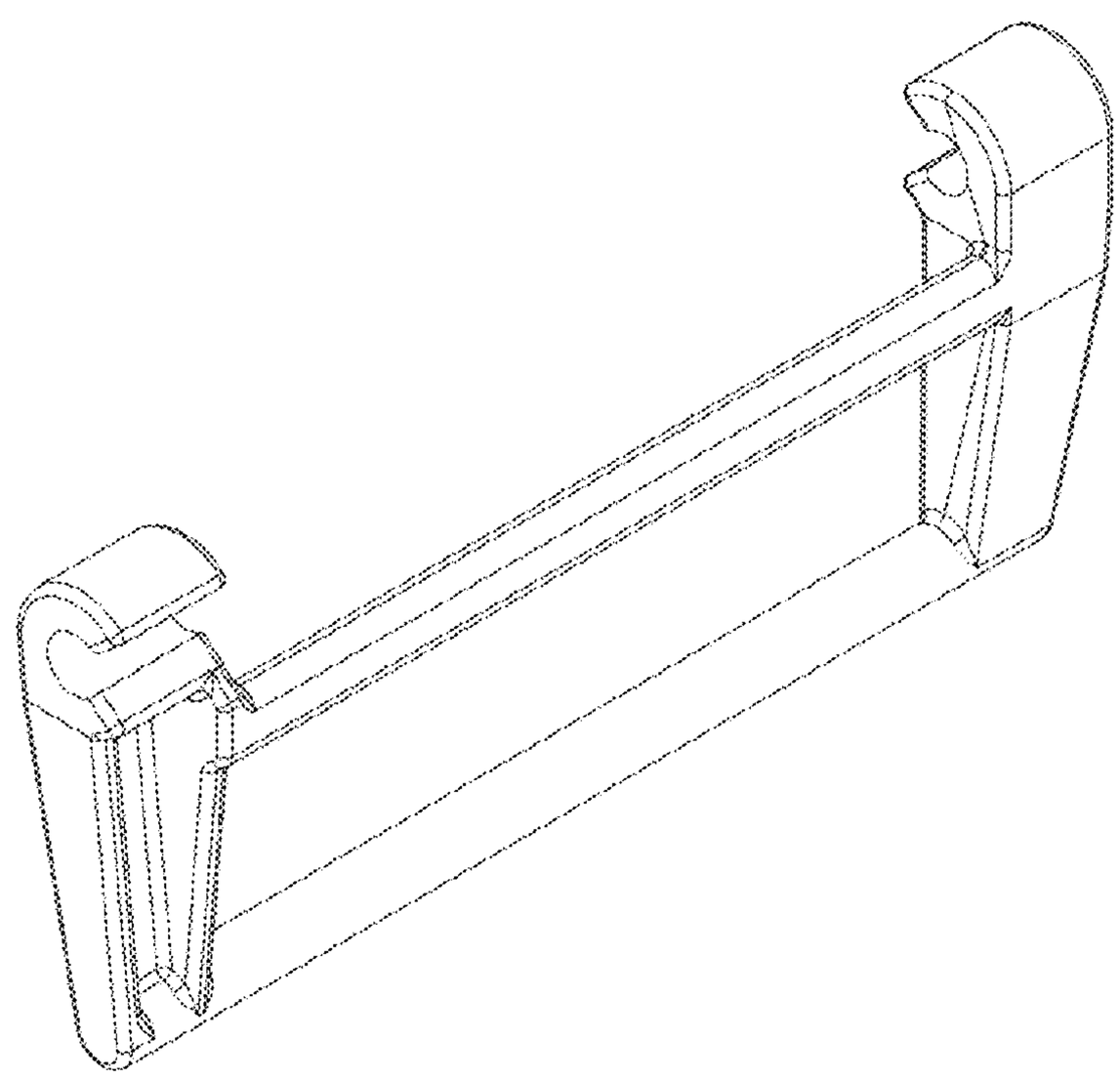

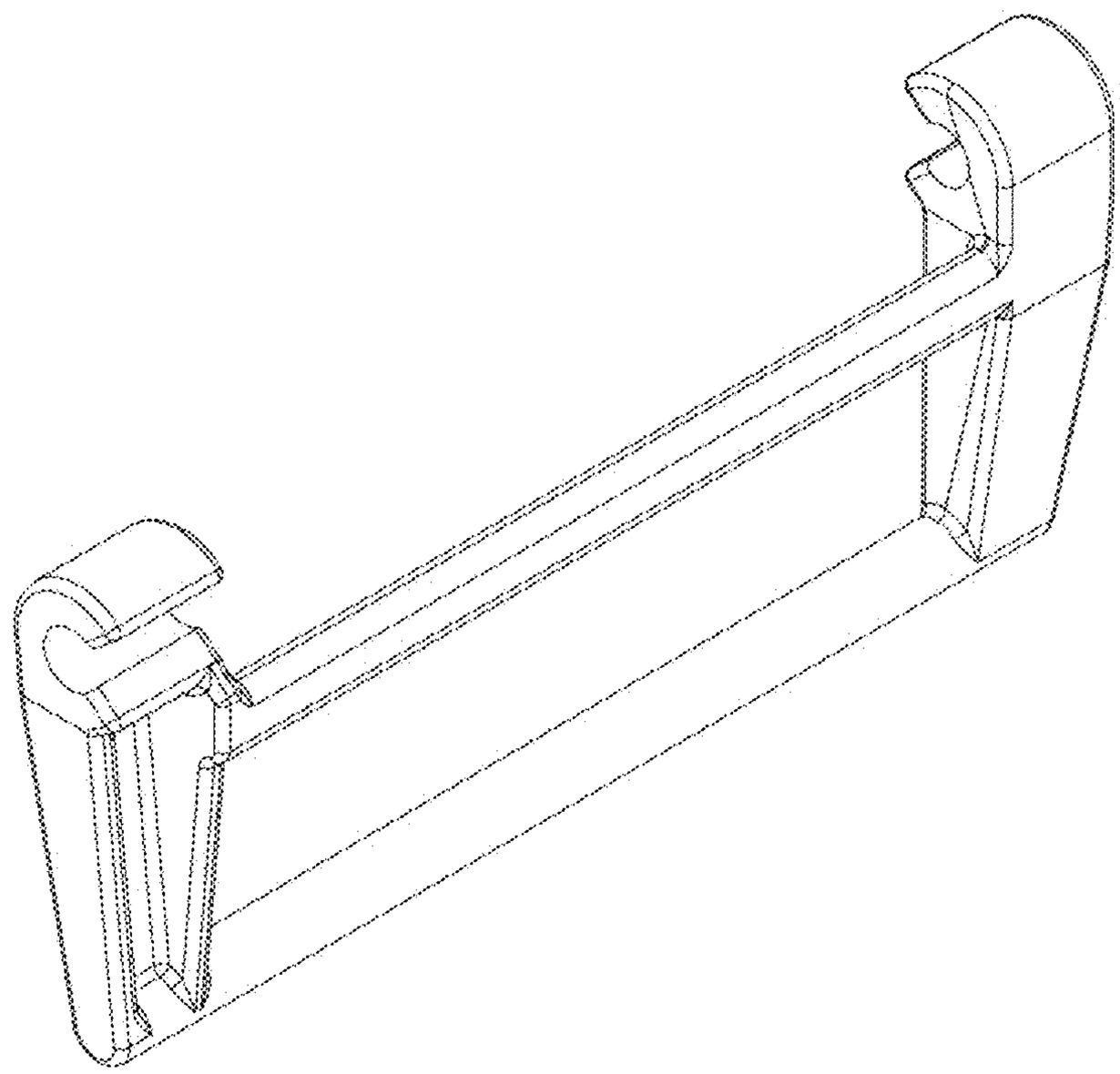

FIG. 1

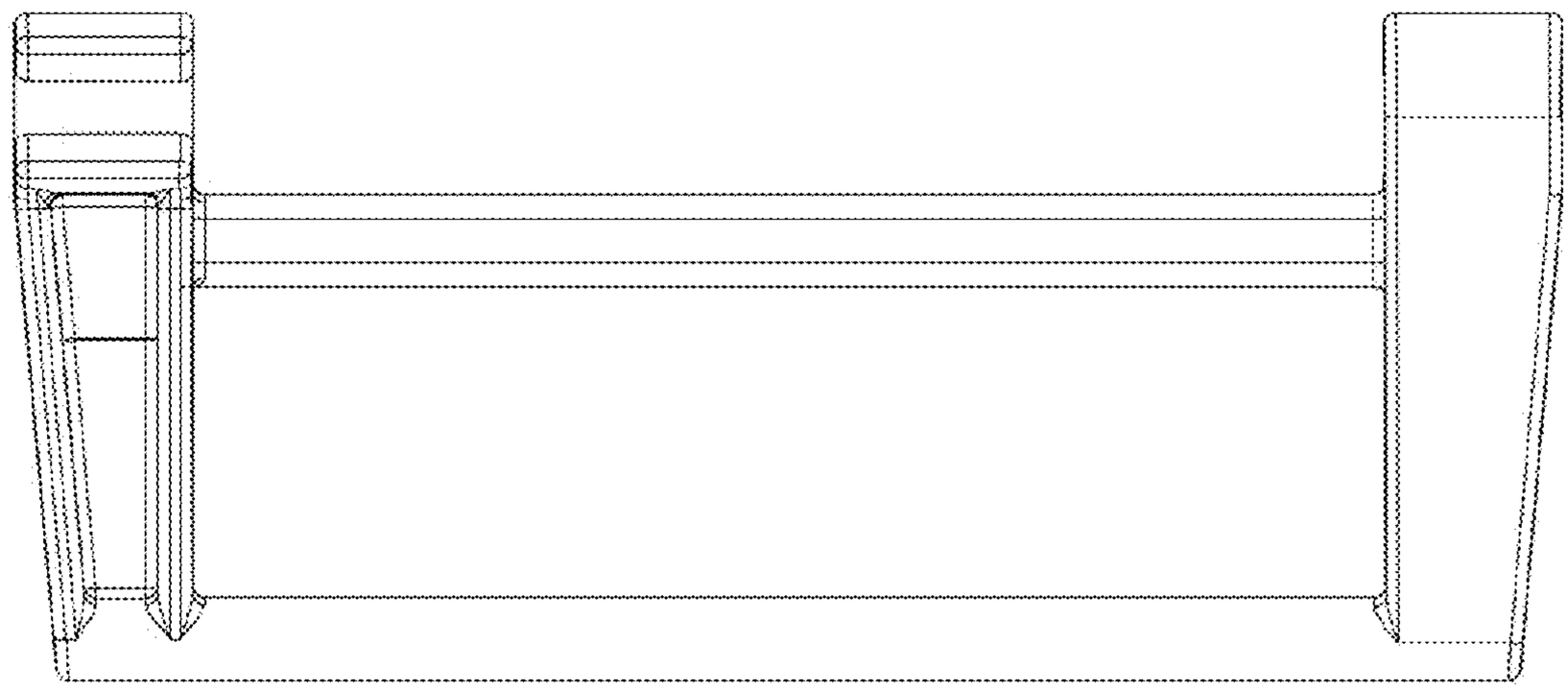

FIG. 2

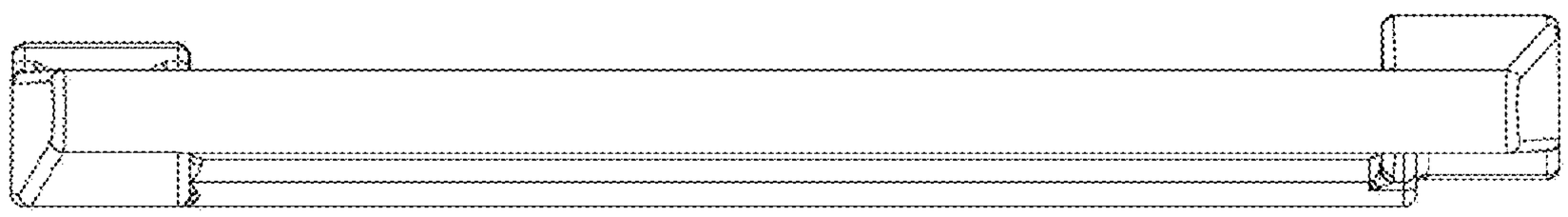

FIG. 3

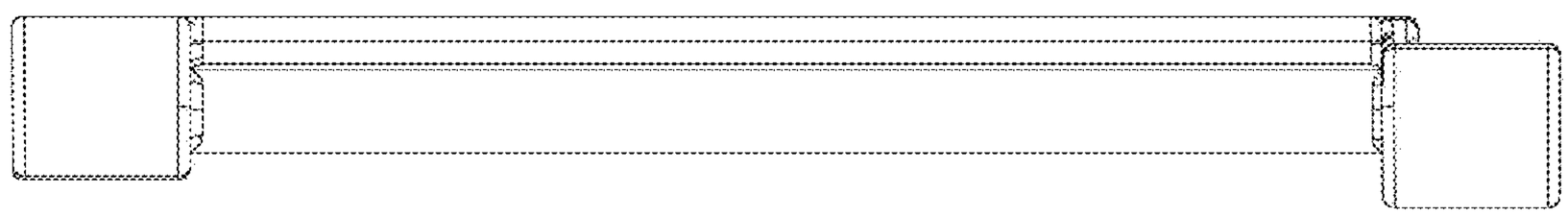

FIG. 4

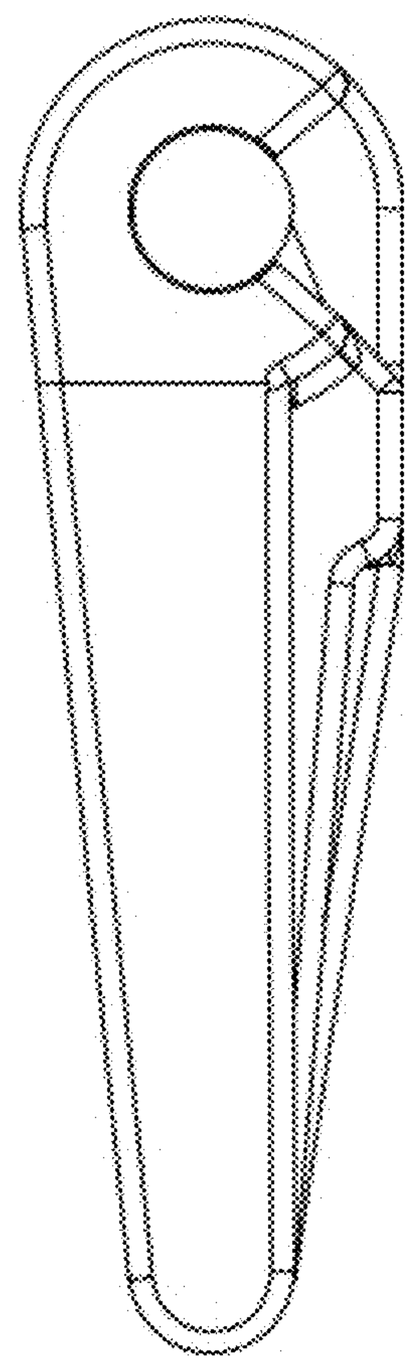

FIG. 5

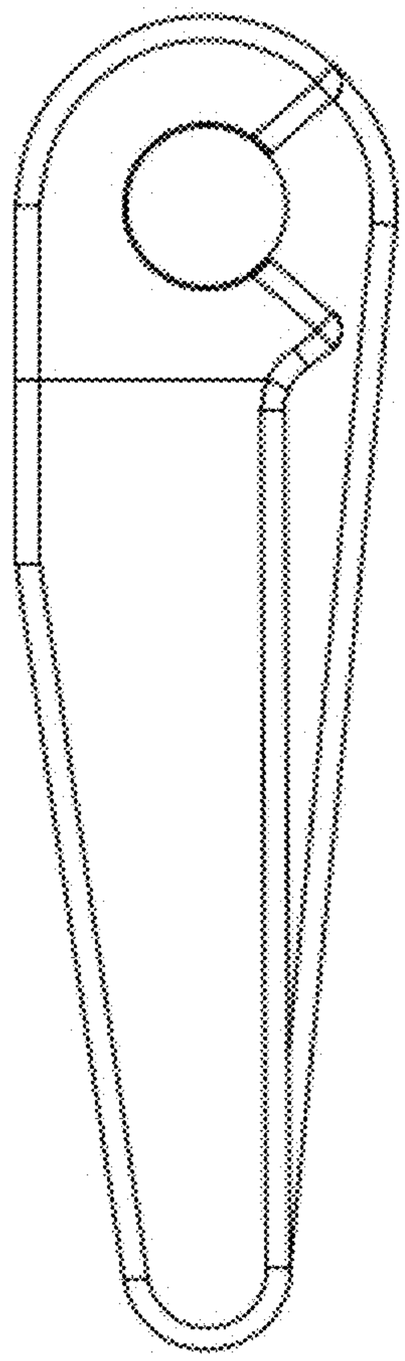

FIG. 6

UNITED STATES PATENT AND TRADEMARK OFFICE

CERTIFICATE OF CORRECTION

PATENT NO. : D749,813 S
APPLICATION NO. : 29/500336
DATED : February 16, 2016
INVENTOR(S) : Nyholm

It is certified that error appears in the above-identified patent and that said Letters Patent is hereby corrected as shown below:

Please delete Patent No. D749,813 S in its entirety and insert Patent No. D749,813 S in its entirety as shown on the attached pages.

Signed and Sealed this
Fourteenth Day of May, 2019

Andrei Iancu
Director of the United States Patent and Trademark Office

(12) **United States Design Patent** (10) **Patent No.: US D749,813 S**
Nyholm (45) **Date of Patent: ** Feb. 16, 2016**

(54) **RETAINER FOR TROLLEYS**

(71) Applicant: **Thomas Nyholm**, Soderkulla (FI)

(72) Inventor: **Thomas Nyholm**, Soderkulla (FI)

(73) Assignee: **K. Hartwell Oy Ab**, Soderkulla (FI)

(**) Term: **14 Years**

(21) Appl. No.: **29/500,336**

(22) Filed: **Aug. 25, 2014**

(30) **Foreign Application Priority Data**

Feb. 26, 2014 (EP) 002413286-0004

(51) **LOC (11) Cl.** **12-02**

(52) **U.S. Cl.**
USPC **D34/27**

(58) **Field of Classification Search**
USPC D34/12–27; D25/136, 126, 122, 121, D25/199, 120, 123, 125; 280/33.991, 280/33.992, 33.993; 224/273, 277, 42.43, 224/411, 572; D19/52, 78, 84, 88, 90; 281/42, 45; 40/308, 27, 530; 297/473, 297/256.17
CPC B65B 3/1428; B65B 3/1444; B65B 3/1416
See application file for complete search history.

(56) **References Cited**

U.S. PATENT DOCUMENTS

4,742,943 A * 5/1988 Trubiano B26B 3/1428 224/277
4,949,997 A * 8/1990 Champagne G09F 5/04 281/42
D377,255 S * 1/1997 Rehrig D34/27
D411,904 S * 7/1999 Risholm D34/27
D443,968 S * 6/2001 Porter D34/27
D445,231 S * 7/2001 Porter D34/27
D523,207 S * 6/2006 Tucker D34/27
D588,774 S * 3/2009 Peota D34/27
D667,603 S * 9/2012 Walter D34/27
D696,483 S * 12/2013 Otterlee D34/27
2013/0257123 A1 * 10/2013 Kraus B62B 3/144 297/256.17

* cited by examiner

Primary Examiner — Cynthia Ramirez
Assistant Examiner — Gino Colan
(74) *Attorney, Agent, or Firm* — McCormick, Paulding & Huber LLP

(57) **CLAIM**

The ornamental design for a retainer for trolleys, as shown and described.

DESCRIPTION

FIG. **1** is a rear, top, and right perspective view of the retainer for trolleys showing my new design;
FIG. **2** is a rear elevational view thereof;
FIG. **3** is a bottom plan view thereof;
FIG. **4** is a top plan view thereof;
FIG. **5** is a right elevational view thereof; and,
FIG. **6** is a left elevational view thereof.

1 Claim, 6 Drawing Sheets

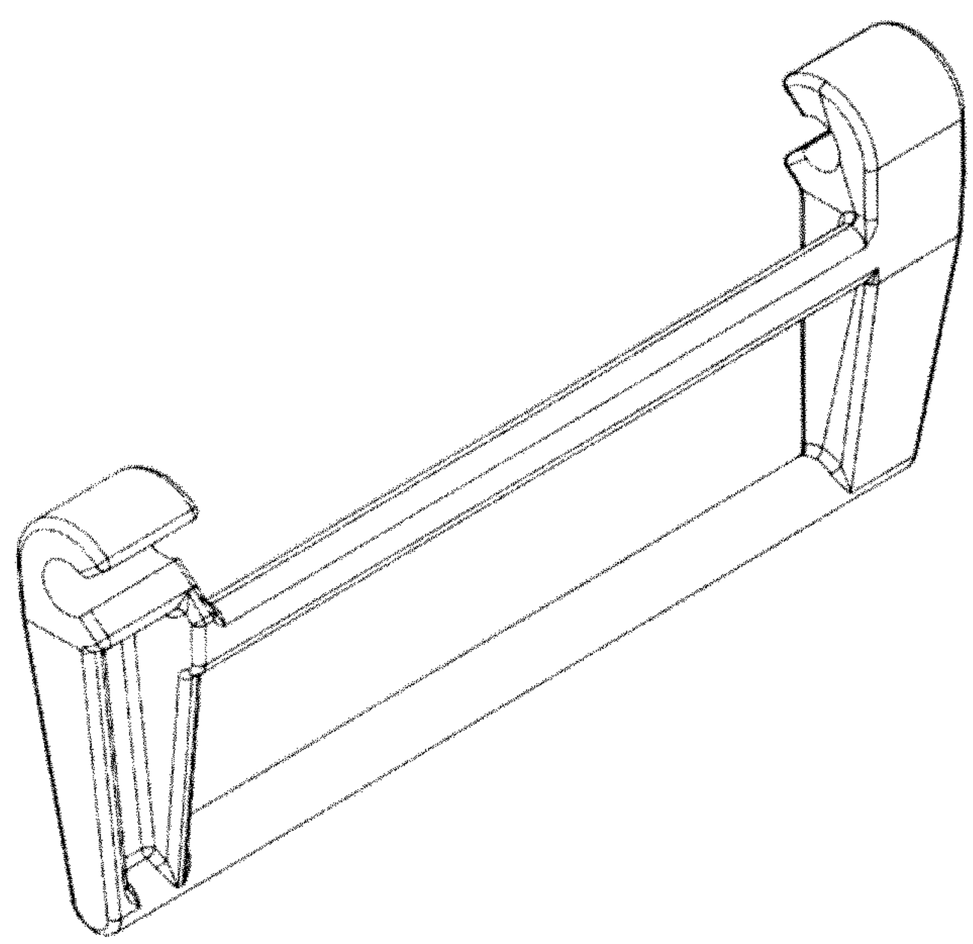

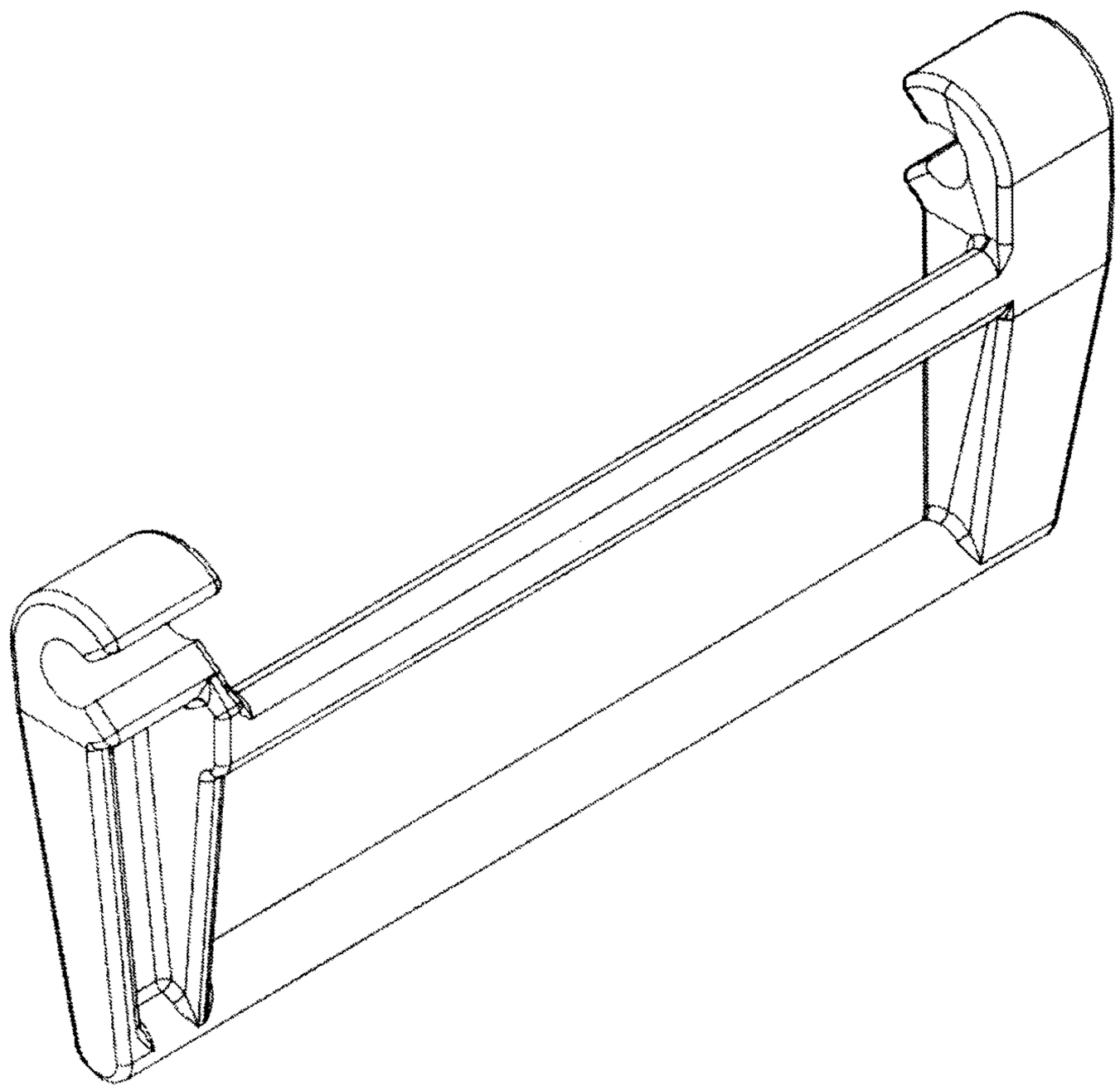

FIG. 1

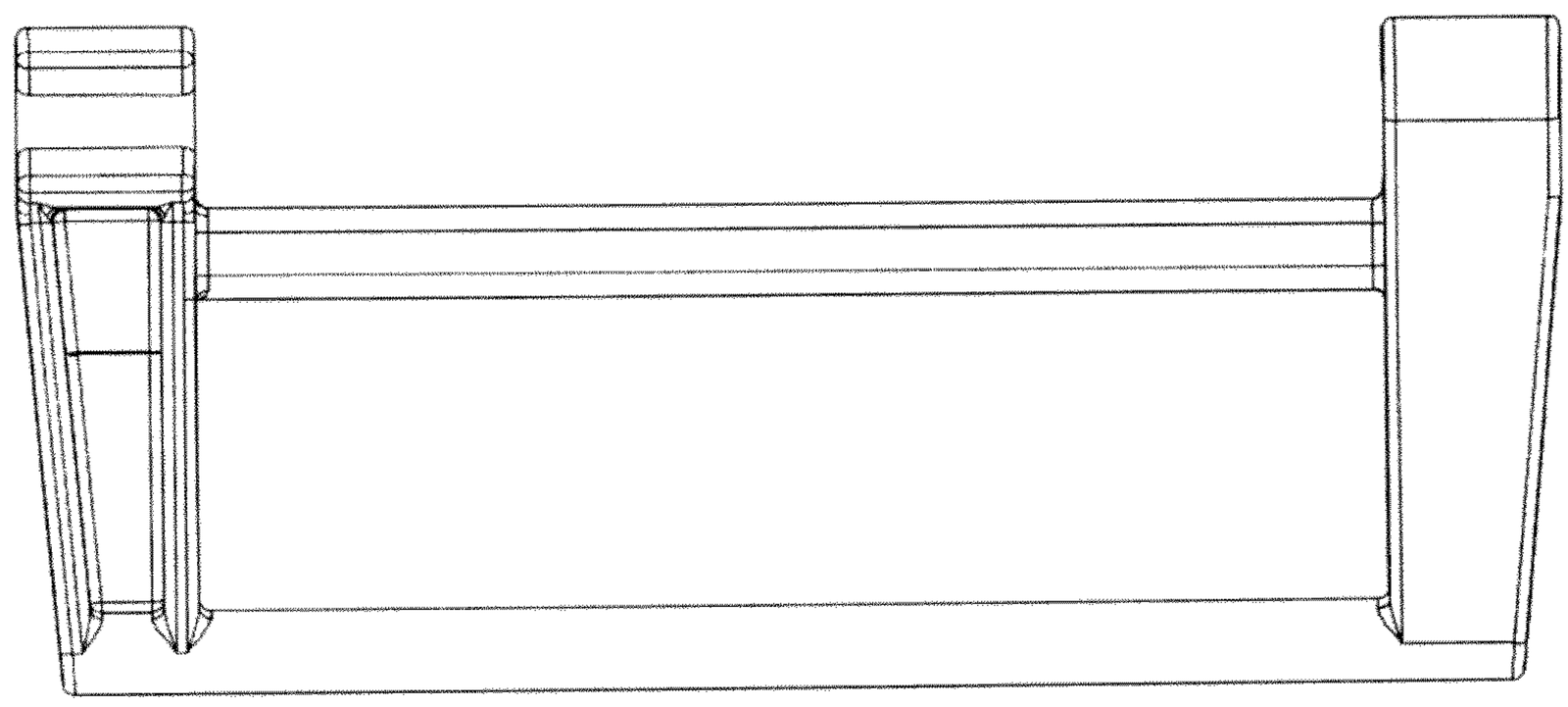

FIG. 2

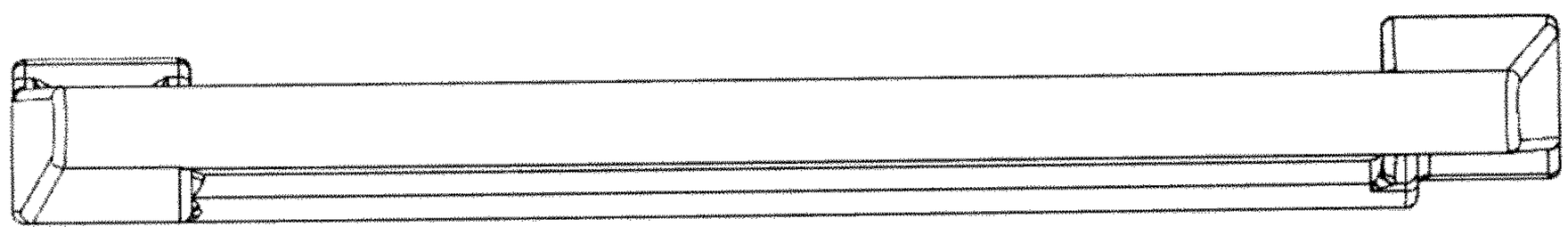

FIG. 3

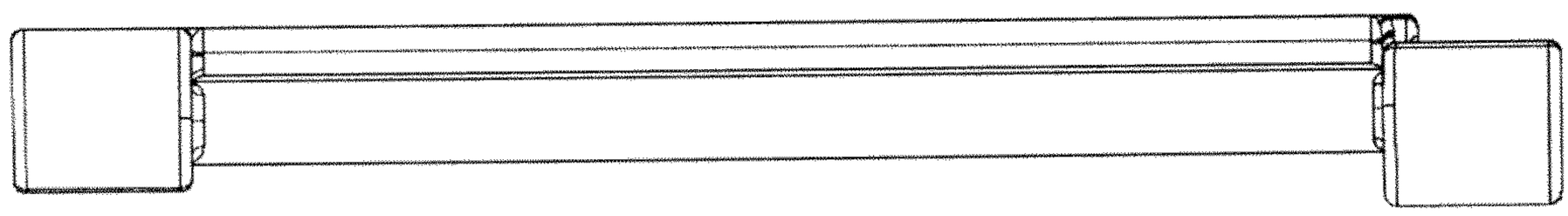

FIG. 4

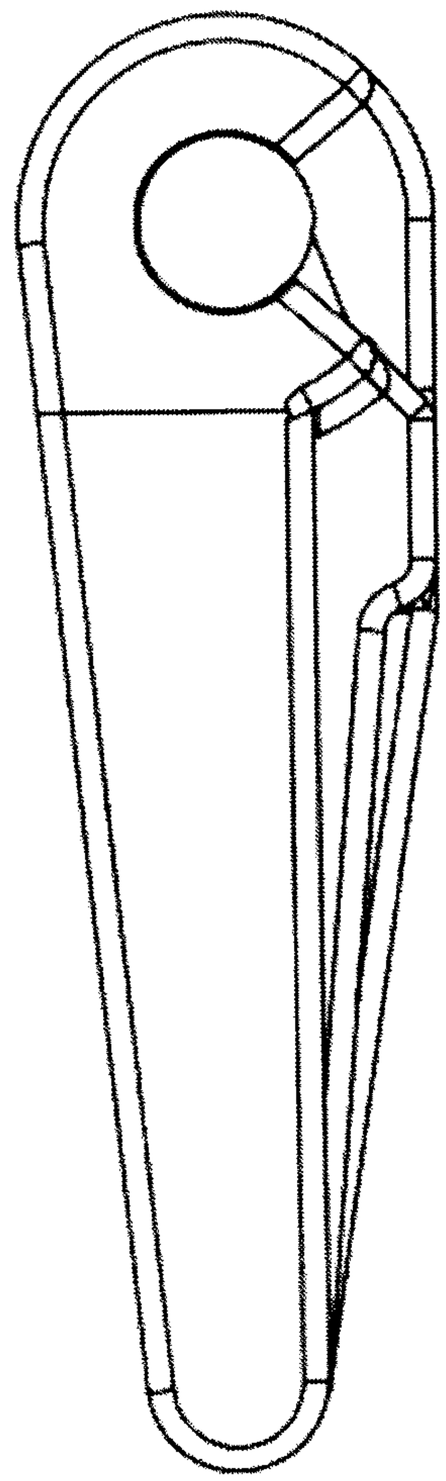

FIG. 5

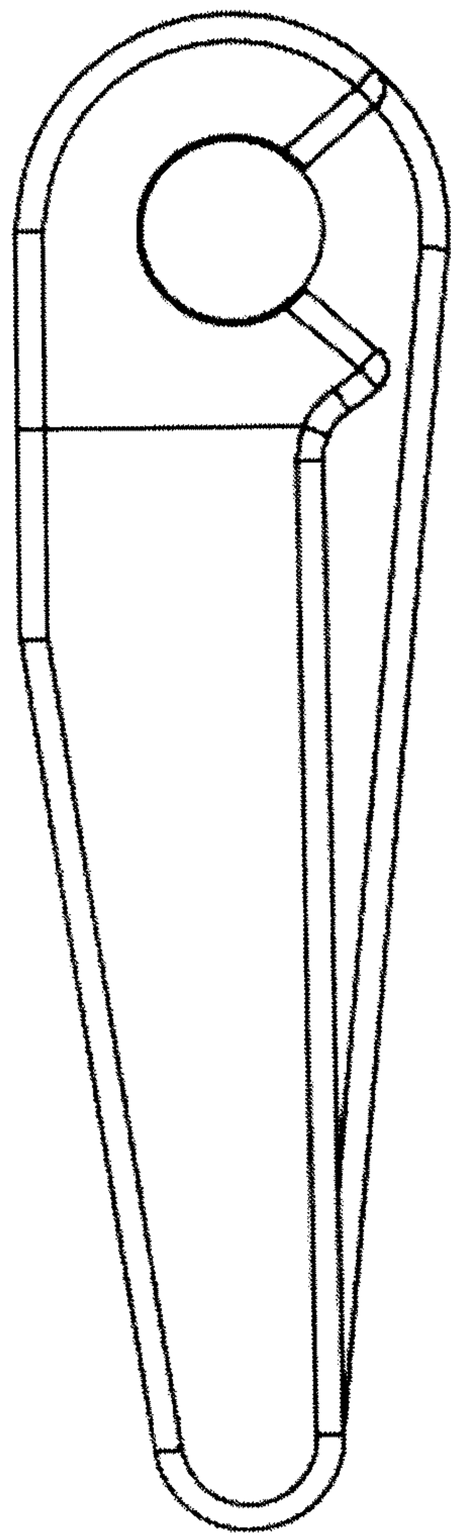

FIG. 6