US00D749748S

(12) **United States Design Patent**
Suzuki

(10) **Patent No.: US D749,748 S**
(45) **Date of Patent: ** Feb. 16, 2016**

(54) **CONDUCTIVE SEAL OF A BIOMEDICAL SIGNAL RECORDER WITH A RADIO FUNCTION**

(71) Applicant: **Kabushiki Kaisha Toshiba**, Minato-ku, Tokyo (JP)

(72) Inventor: **Takuji Suzuki**, Yokohama (JP)

(73) Assignee: **Kabushiki Kaisha Toshiba**, Minato-ku, Tokyo (JP)

(**) Term: **14 Years**

(21) Appl. No.: **29/465,679**

(22) Filed: **Aug. 30, 2013**

(30) **Foreign Application Priority Data**

Mar. 4, 2013 (JP) 2013-004672
Mar. 4, 2013 (JP) 2013-004673
Mar. 4, 2013 (JP) 2013-004679

(51) **LOC (10) Cl.** **24-02**
(52) **U.S. Cl.**
USPC **D24/232**
(58) **Field of Classification Search**
USPC D24/232, 186, 225, 234, 158, 127–128, D24/107, 187; D21/302, 365–366; D20/27; D9/457; 455/556.1; 109/49.5; 451/451, 451/457; D19/37; 600/391–392, 409
See application file for complete search history.

(56) **References Cited**

U.S. PATENT DOCUMENTS

3,606,881 A * 9/1971 Woodson 600/392
D259,073 S * 5/1981 Holmes D20/27
5,402,780 A * 4/1995 Faasse, Jr. 600/392
5,511,548 A * 4/1996 Riazzi et al. 600/391
6,285,899 B1 * 9/2001 Ghaem et al. 600/391

(Continued)

Primary Examiner — Wan Laymon
(74) *Attorney, Agent, or Firm* — Banner & Witcoff, Ltd.

(57) **CLAIM**

The ornamental design for a conductive seal of a biomedical signal recorder with a radio function, as shown and described.

DESCRIPTION

FIG. **1** is a top view of a conductive seal of a biomedical signal recorder with a radio function, showing my new design; the bottom being symmetrical;
FIG. **2** is a front view thereof;
FIG. **3** is a right side view thereof; the left side being symmetrical;
FIG. **4** is a rear view thereof;
FIG. **5** is a cross-section view, taken along the line **5-5** in FIG. **2** thereof;
FIG. **6** is an exploded assembly showing a state of separated components of the sheet thereof;
FIG. **7** is a top view of a second embodiment of a conductive seal of a biomedical signal recorder with a radio function; the bottom being symmetrical;
FIG. **8** is a front view thereof;
FIG. **9** is a right side view thereof; the left side being symmetrical;
FIG. **10** is a rear view thereof;
FIG. **11** is a cross-section view taken along the line **11-11** in FIG. **8** thereof;
FIG. **12** is an exploded assembly view showing a state of separated components of the sheet thereof;
FIG. **13** is a top view of a third embodiment of a conductive seal of a biomedical signal recorder with a radio function; the bottom being symmetrical;
FIG. **14** is a front view thereof;
FIG. **15** is a right side view thereof; the left side being symmetrical;
FIG. **16** is a rear view thereof;
FIG. **17** is a cross section view taken along the line **17-17** in FIG. **14** thereof; and,
FIG. **18** is an exploded assembly view showing a state of separated components of the sheet thereof.
The broken lines shown in the Figures are for illustrative purposes only and form no part of the claimed design.

1 Claim, 9 Drawing Sheets

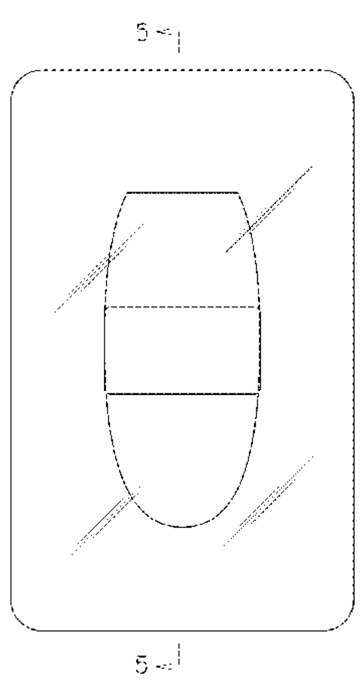

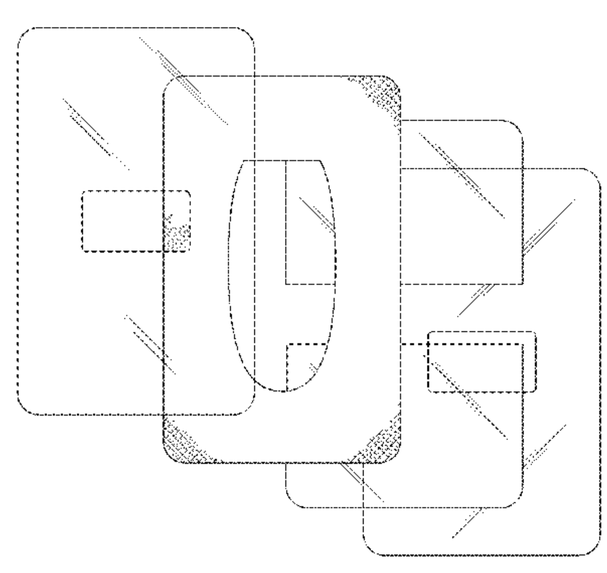

(56) **References Cited**

U.S. PATENT DOCUMENTS

6,950,688 B2 * 9/2005 Axelgaard et al. 600/391
7,957,785 B2 * 6/2011 Nishimura 600/391
8,428,682 B1 * 4/2013 Rood et al. 600/391

* cited by examiner

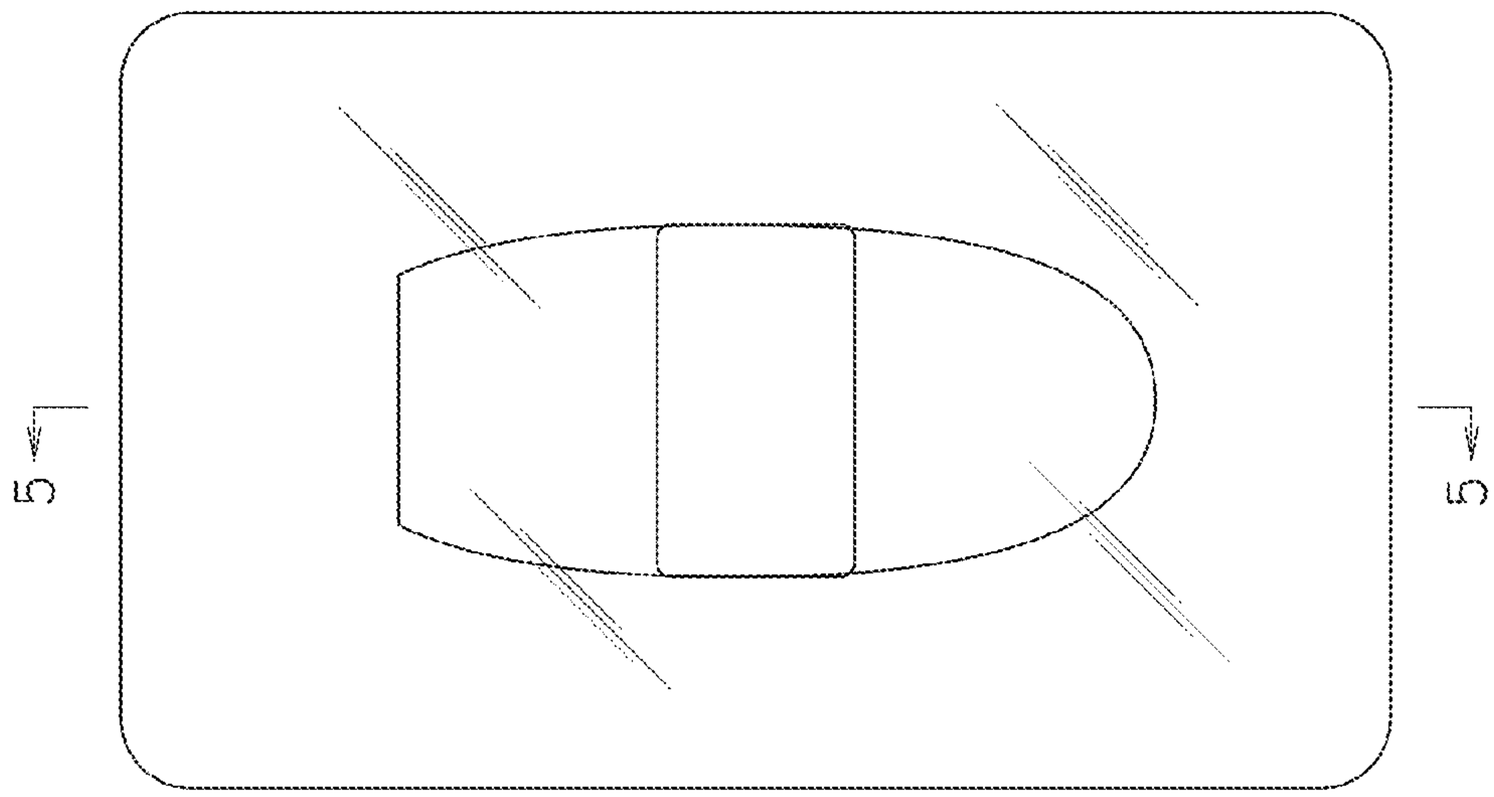

FIG. 2

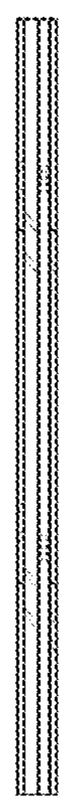

FIG. 1

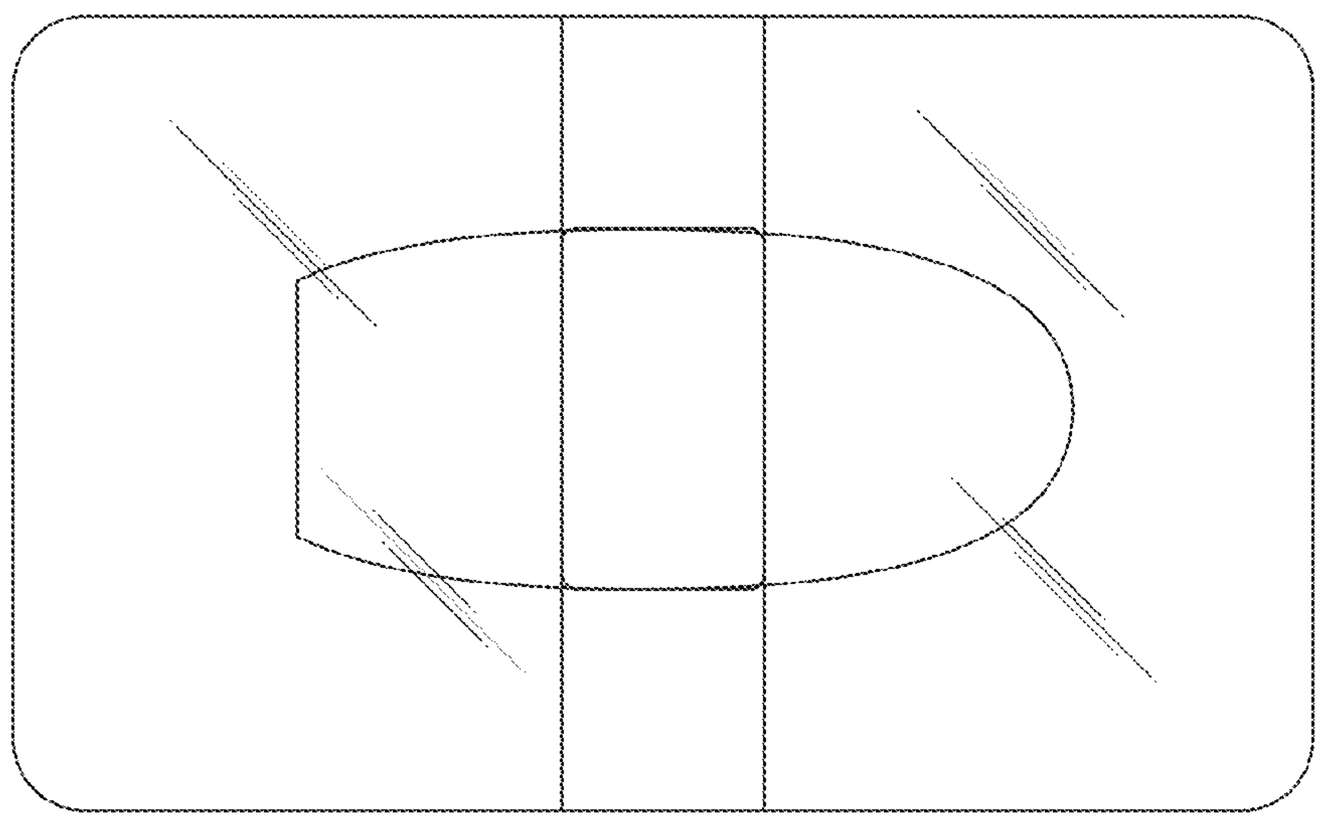

FIG. 4

FIG. 3

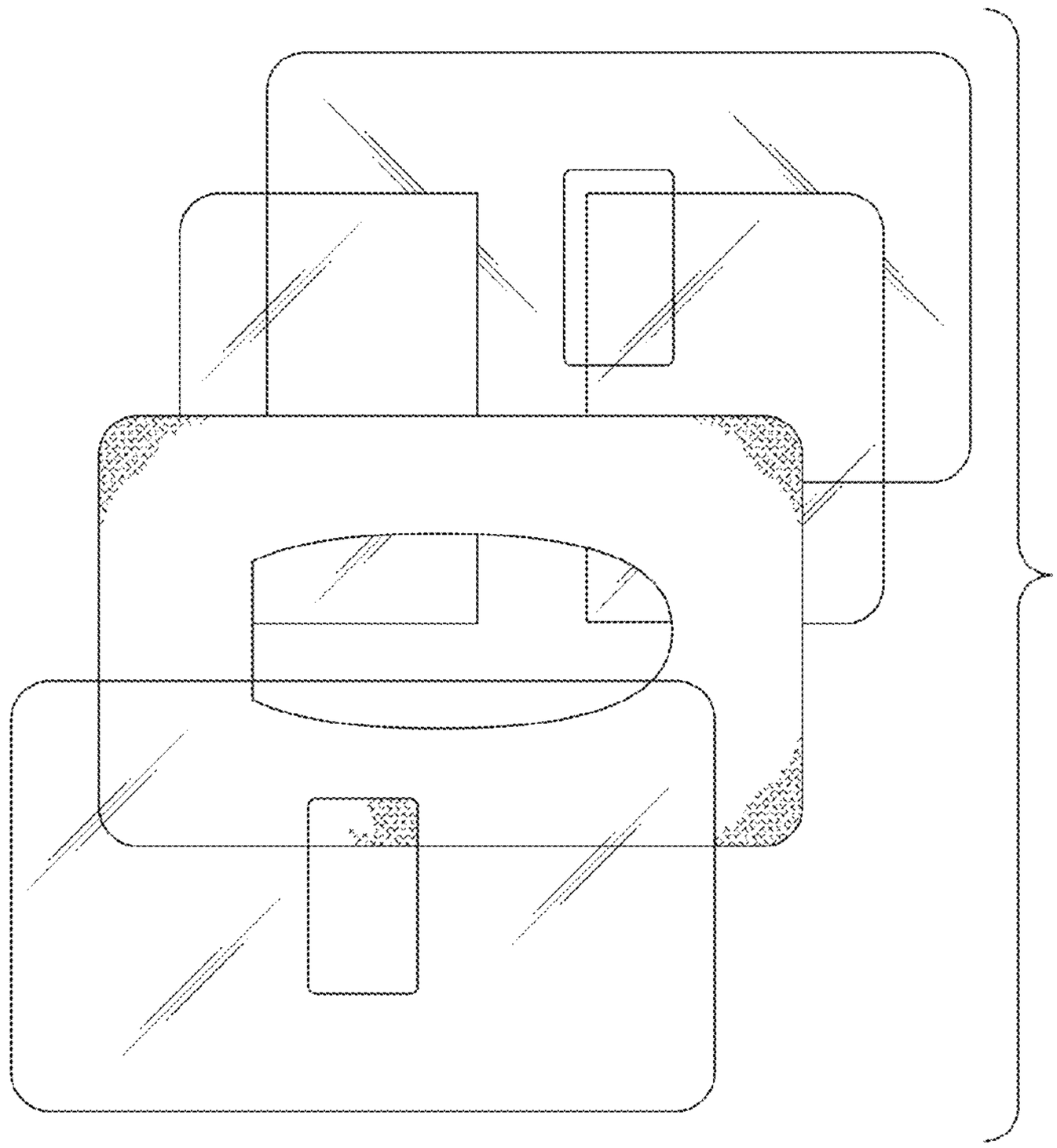

FIG. 6

FIG. 5

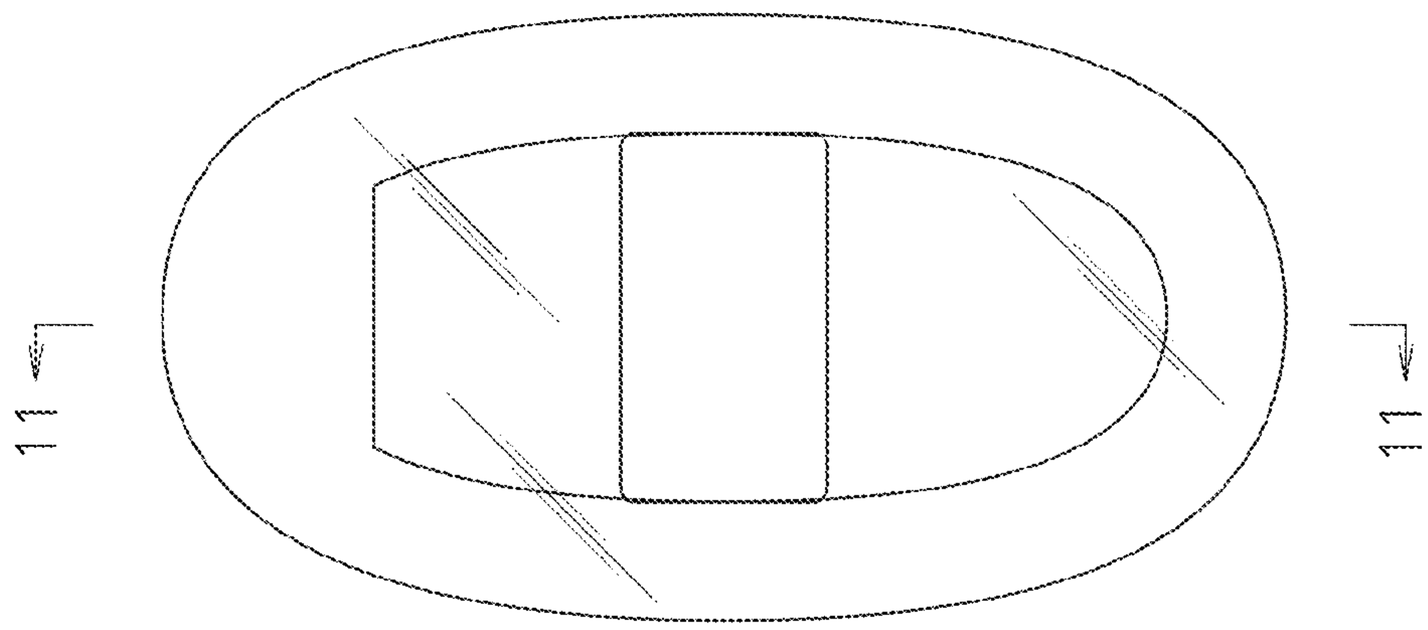

FIG. 8

FIG. 7

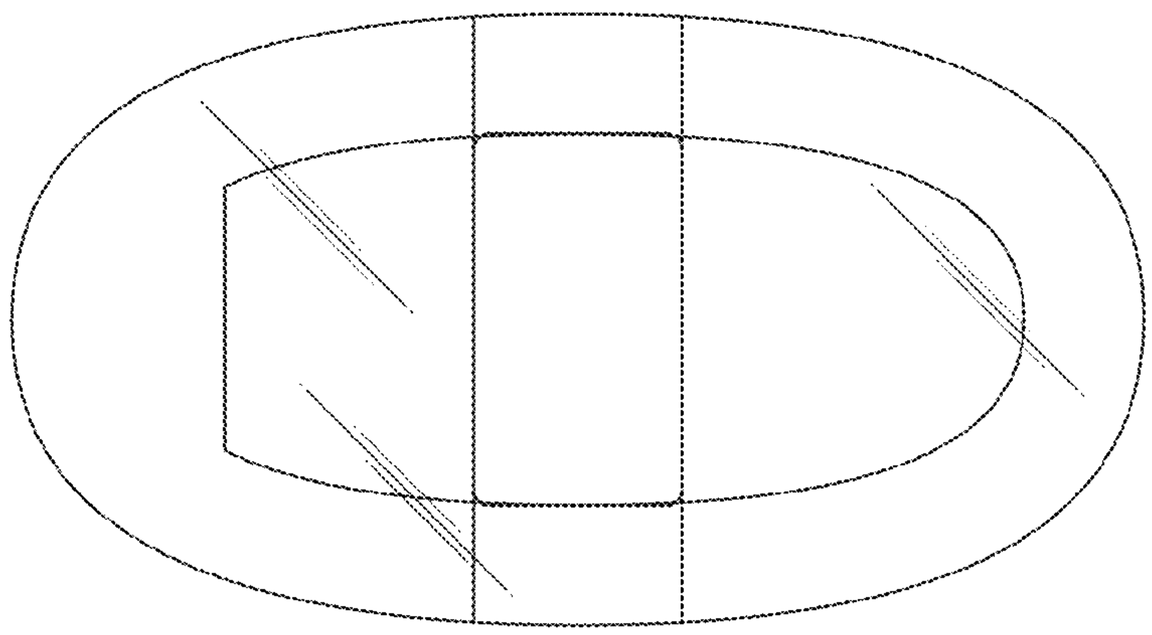

FIG. 10

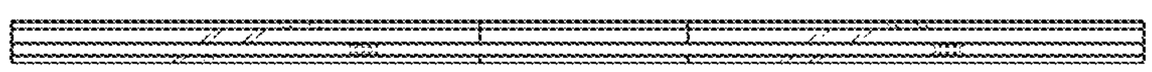

FIG. 9

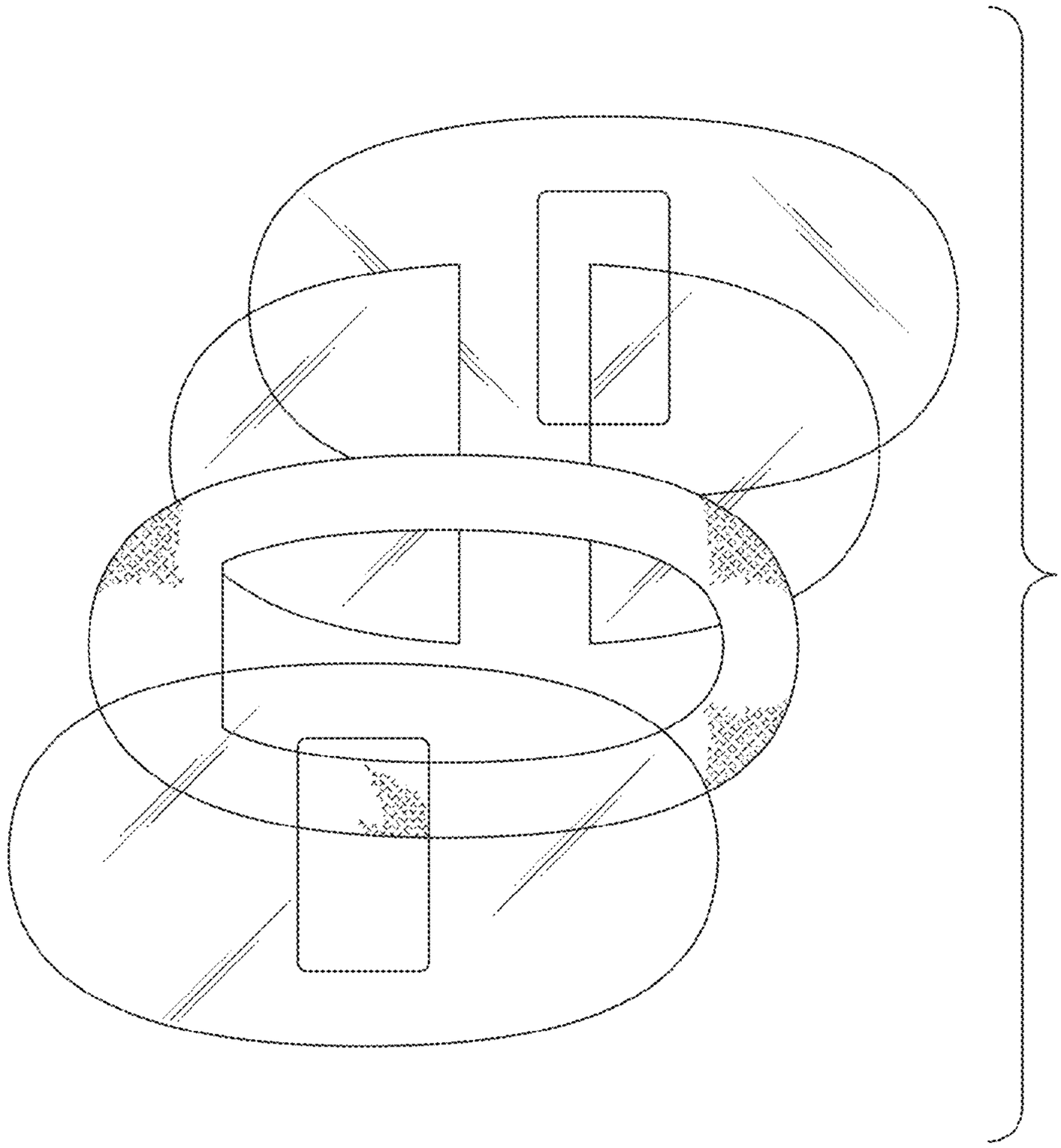

FIG. 12

FIG. 11

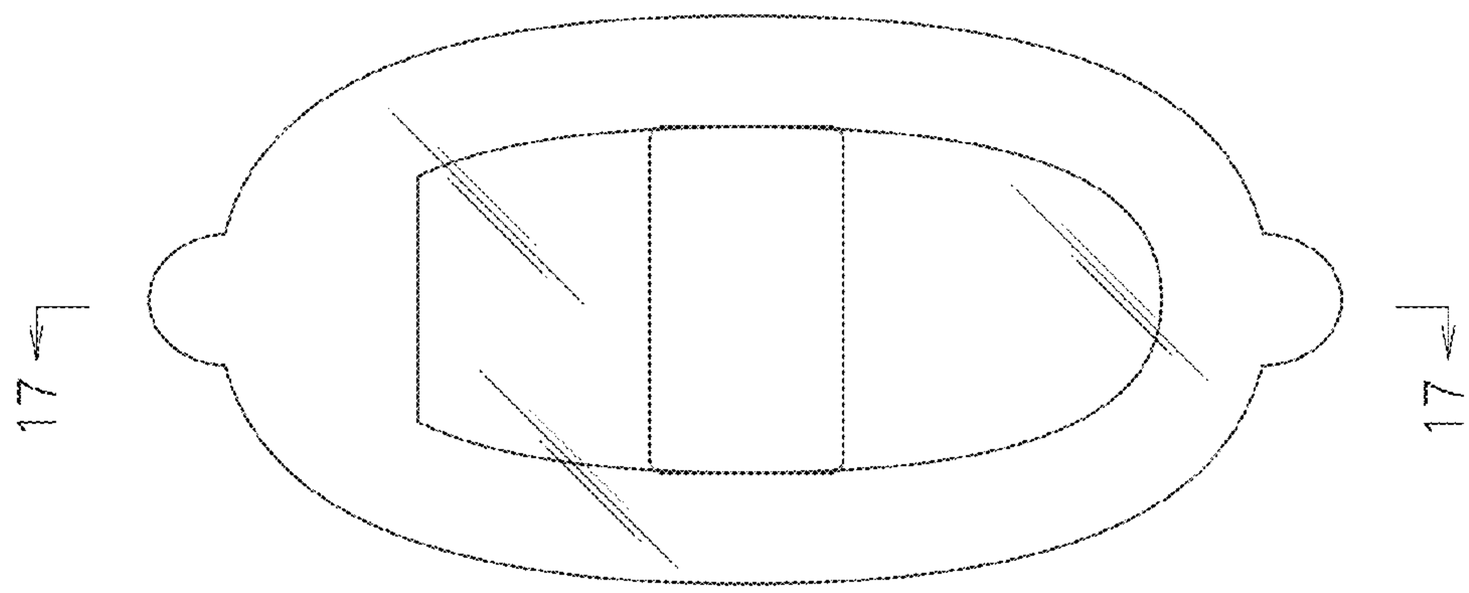

FIG. 14

FIG. 13

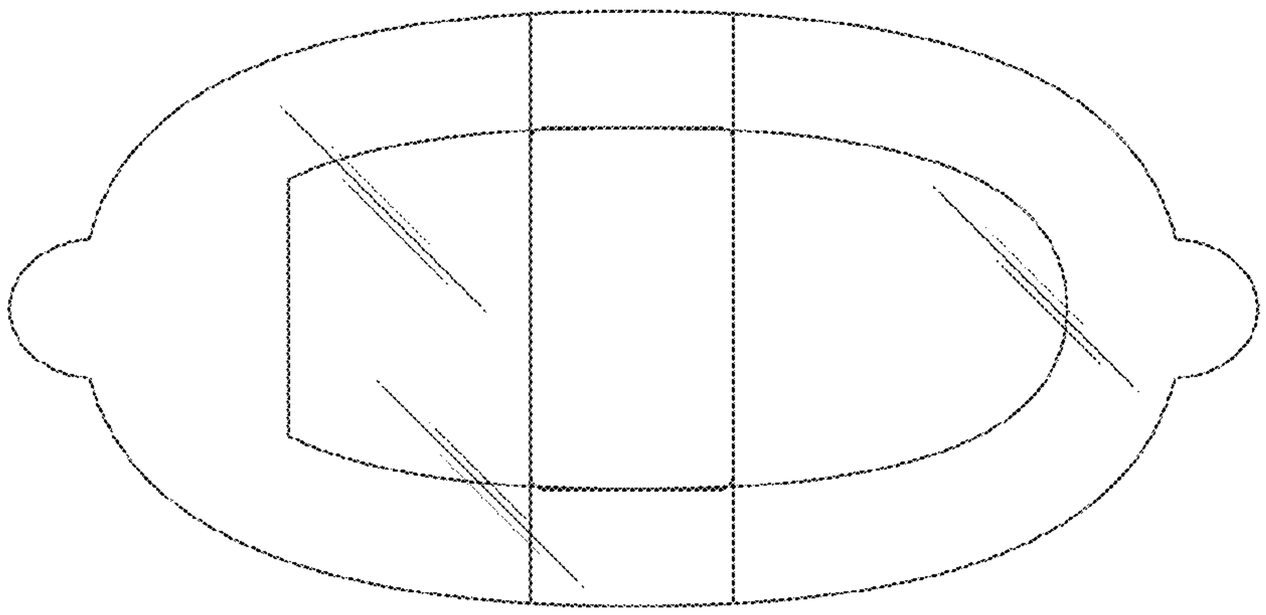

FIG. 16

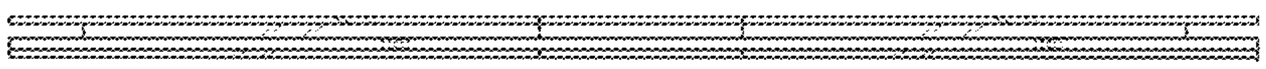

FIG. 15

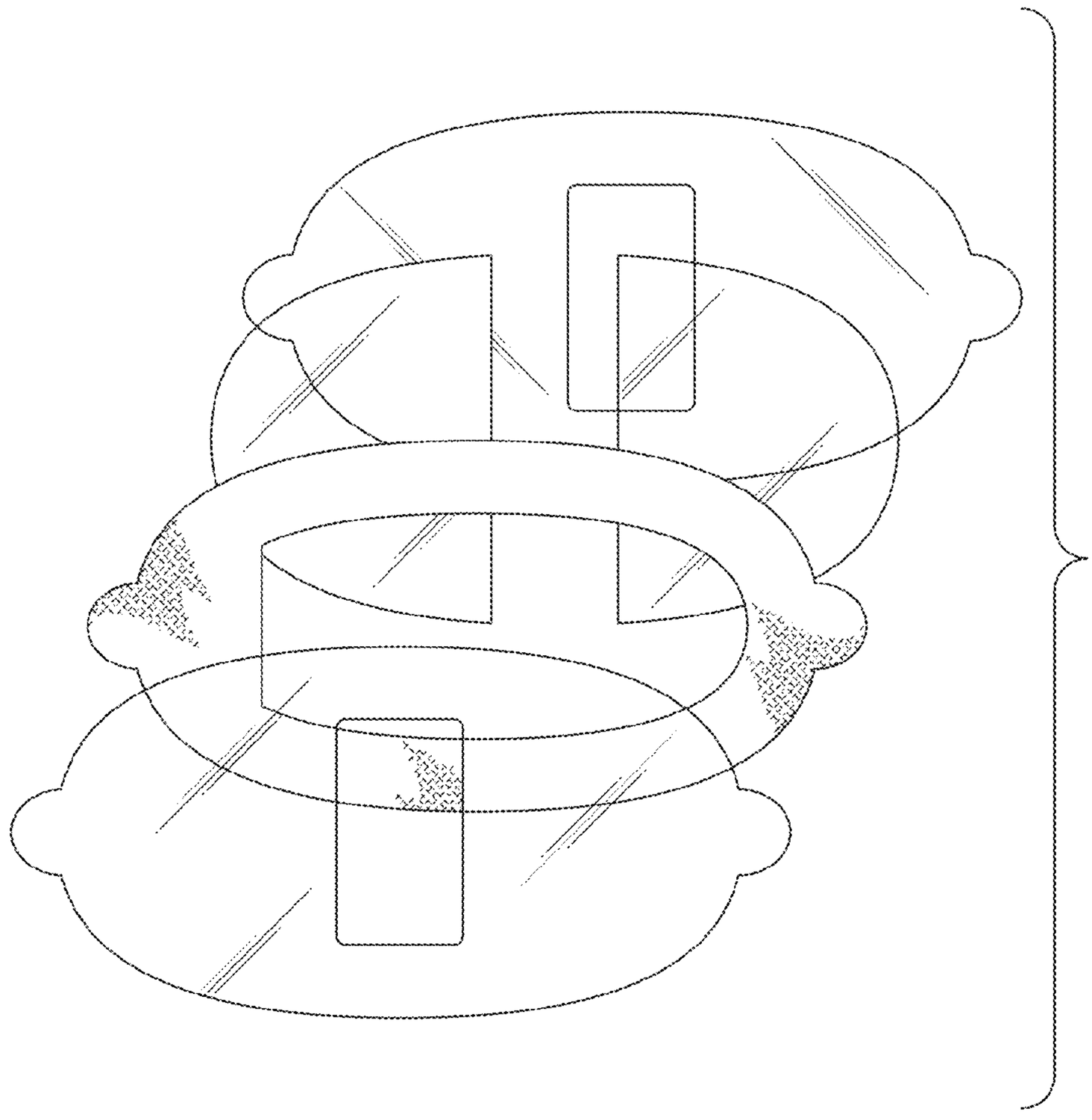

FIG. 18

FIG. 17