US00D749210S

(12) United States Design Patent

Appelbaum et al.

(10) Patent No.: US D749,210 S
(45) Date of Patent: ** Feb. 9, 2016

(54) **PROBE HOLDER**

(71) Applicant: **Novian Health Inc.**, Chicago, IL (US)

(72) Inventors: **Henry R. Appelbaum**, Chicago, IL (US); **William F. Graveman**, Tonganoxie, KS (US); **Julian Itzcovitz**, Neuilly sur Seine (FR)

(73) Assignee: **Novian Health Inc.**, Chicago, IL (US)

(**) Term: **15 Years**

(21) Appl. No.: **29/527,319**

(22) Filed: **May 18, 2015**

Related U.S. Application Data

(62) Division of application No. 29/454,169, filed on May 7, 2013, now Pat. No. Des. 733,873.

(51) **LOC (10) Cl.** **24-02**

(52) **U.S. Cl.**
USPC **D24/128**

(58) **Field of Classification Search**
USPC D24/201–205; 601/6, 15, 64, 157–158, 601/30–32; 604/21; 600/407
See application file for complete search history.

(56) **References Cited**

U.S. PATENT DOCUMENTS

1,968,997	A	8/1934	Drucker
2,189,989	A	2/1940	Lichtman
3,753,657	A	8/1973	Downing et al.
4,222,375	A	9/1980	Martinez
4,402,311	A	9/1983	Hattori
4,559,942	A	12/1985	Eisenberg
4,616,656	A	10/1986	Nicholson et al.
4,662,368	A	5/1987	Hussein et al.
4,665,927	A	5/1987	Daily
4,681,122	A	7/1987	Winters et al.
4,744,627	A	5/1988	Chande et al.

(Continued)

FOREIGN PATENT DOCUMENTS

DE	2826383	12/1979
JP	2001148280	9/1989

(Continued)

OTHER PUBLICATIONS

Dowlatshahi, Kambiz, MD., et al. "Stereotactically Guided Laser Therapy of Occult Breast Tumors," published by Arch Surg in Nov. 2000.

(Continued)

Primary Examiner — Ian Simmons
Assistant Examiner — Samantha Q Lawrence
(74) *Attorney, Agent, or Firm* — Neal, Gerber & Eisenberg LLP

(57) **CLAIM**

The ornamental design for a probe holder, as shown and described herein.

DESCRIPTION

FIG. **1** is a front perspective view of a probe holder of our new design;
FIG. **2** is a front view of the probe holder;
FIG. **3** is a rear view of the probe holder;
FIG. **4** is a right side view of the probe holder;
FIG. **5** is a left side view of the probe holder;
FIG. **6** is a top plan view of the probe holder; and,
FIG. **7** is a bottom plan view of the probe holder.
The broken lines shown in FIGS. **1-7** illustrate portions of the probe holder that form no part of the claimed design.

1 Claim, 5 Drawing Sheets

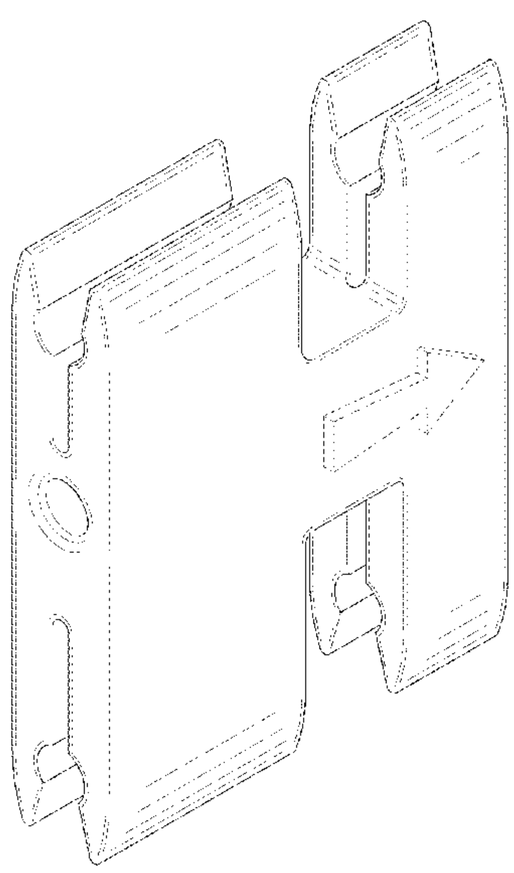

(56) **References Cited**

U.S. PATENT DOCUMENTS

4,773,413	A		9/1988	Hussein et al.
4,774,948	A		10/1988	Markham
4,776,334	A		10/1988	Prionas
4,819,630	A		4/1989	Dehart
4,880,122	A		11/1989	Martindell
4,883,062	A		11/1989	Nicholson
4,890,898	A		1/1990	Bentley et al.
4,920,978	A		5/1990	Colvin
4,931,059	A		6/1990	Markham
4,932,934	A		6/1990	Dougherty
4,946,440	A		8/1990	Hall
4,950,267	A		8/1990	Ishihara et al.
4,952,146	A		8/1990	Doty
4,957,481	A		9/1990	Gatenby
4,959,063	A		9/1990	Kojima
4,961,422	A		10/1990	Marchosky et al.
D311,954	S		11/1990	Kamen
4,967,765	A		11/1990	Turner et al.
5,019,075	A		5/1991	Spears et al.
5,050,597	A		9/1991	Daikuzono
5,059,197	A		10/1991	Urie et al.
5,061,265	A		10/1991	Abela et al.
5,078,142	A		1/1992	Siczek et al.
5,125,925	A		6/1992	Lundahl
5,127,916	A		7/1992	Spencer et al.
5,129,896	A		7/1992	Hasson
5,150,704	A		9/1992	Tatebayashi et al.
5,158,084	A		10/1992	Ghiatus
5,169,396	A		12/1992	Dowlatshahi et al.
5,178,148	A		1/1993	Lacoste et al.
5,178,164	A		1/1993	Allen
5,195,526	A		3/1993	Michelson
5,222,953	A		6/1993	Dowlatshahi
5,234,426	A		8/1993	Rank et al.
5,242,437	A		9/1993	Everett et al.
D344,464	S	*	2/1994	Kerschner D10/80
5,312,392	A		5/1994	Hofstetter et al.
5,323,779	A		6/1994	Hardy et al.
5,330,517	A		7/1994	Mordon et al.
5,386,447	A		1/1995	Siczek
5,396,897	A		3/1995	Jain et al.
5,398,899	A		3/1995	Austin et al.
RE34,936	E		5/1995	Campbell et al.
5,460,066	A		10/1995	Dennstedt
5,505,203	A		4/1996	Deitrich et al.
5,520,182	A		5/1996	Leighton et al.
5,569,240	A		10/1996	Dowlatshahi et al.
D375,450	S		11/1996	Bidwell et al.
5,615,430	A		4/1997	Nambu et al.
5,620,479	A		4/1997	Diederich
D383,968	S	*	9/1997	Bidwell D8/356
D391,838	S		3/1998	Bidwell et al.
5,735,264	A		4/1998	Siczek et al.
D397,790	S		9/1998	Naganuma
5,813,985	A		9/1998	Carroll
5,853,366	A		12/1998	Dowlatshahi
5,954,711	A		9/1999	Ozaki et al.
6,241,725	B1		6/2001	Cosman
D452,314	S		12/2001	Niermann
6,456,684	B1		9/2002	Mun et al.
6,500,343	B2		12/2002	Siddiqi
6,551,302	B1		4/2003	Roskino et al.
6,569,176	B2		5/2003	Jesseph
6,603,988	B2		8/2003	Dowlatshahi
6,701,175	B2		3/2004	Dowlatshahi
6,755,849	B1		6/2004	Gowda et al.
6,865,412	B2		3/2005	Dowlatshahi
6,928,672	B2		8/2005	Pastyr et al.
7,041,109	B2		5/2006	Dowlatshahi
7,074,233	B1		7/2006	Gowda et al.
7,171,253	B2		1/2007	Dowlatshahi
7,270,656	B2		9/2007	Gowda et al.
7,274,847	B2		9/2007	Gowda et al.
D630,757	S	*	1/2011	Kitayama D24/187
D653,130	S	*	1/2012	Borovicka D10/57
8,092,507	B2		1/2012	Tomasello et al.
D674,506	S	*	1/2013	LaBrasca D24/227
D700,321	S		2/2014	Strong
D700,970	S		3/2014	Kim
D709,753	S		7/2014	Guala
D713,525	S		9/2014	Oguro et al.
D715,925	S		10/2014	Suzuki et al.
2002/0026127	A1		2/2002	Balbierz et al.
2003/0023236	A1		1/2003	Gowda et al.
2003/0060813	A1		3/2003	Loeb
2003/0236463	A1		12/2003	Mesaros et al.
2004/0215101	A1		10/2004	Rioux et al.
2005/0113641	A1		5/2005	Bala
2005/0165287	A1		7/2005	Wescott, III
2005/0169596	A1		8/2005	Hamasaki et al.
2006/0095096	A1		5/2006	DeBenedictis et al.
2006/0104593	A1		5/2006	Gowda et al.
2006/0155298	A1		7/2006	Mueller et al.
2006/0217693	A1		9/2006	Gowda et al.
2006/0241727	A1		10/2006	Dowlatshahi
2007/0100229	A1		5/2007	Dowlatshahi
2007/0119738	A1		5/2007	Clegg et al.
2007/0219544	A1		9/2007	Gowda et al.
2008/0015560	A1		1/2008	Gowda et al.
2008/0114340	A1		5/2008	Fox et al.
2009/0036982	A1		2/2009	Aharoni et al.

FOREIGN PATENT DOCUMENTS

WO	WO8704611	8/1987
WO	WO0013603	3/2000
WO	WO0059394	10/2000
WO	WO03011160	2/2003
WO	WO2005046753	5/2005
WO	WO2006055554	5/2006

OTHER PUBLICATIONS

Dowlatshahi, Kambiz, MD., "Laser Therapy of Small Breast Cancers." Presented at the Third Annual Meeting of the American Society of Breast Surgeons, Apr. 24-28, 2002. 152-166.

Dowlatshahi, Kambiz, MD., "Interstitial Laser Treatment of Small Breast Cancers," *Lasers in Medicine, Surgery, and Dentistry.* 2003. 677-689.

Dowlatshahi, Kambiz, MD., et al. "Laser Therapy of Breast Cancer with 3-Year Follow-up." *The Breast Journal,* vol. 10, No. 3, 2004. 240-243.

Dowlatshahi, Kambiz, MD., "Shift in the Surgical Treatment of Non-Palpable Breast Cancer: Tactile to Visual." *Rush University Medical Center.* Breast Cancer Online <http://www.bco.org>, Oct. 9, 2005, 1-10.

Kelsey. "Revolutionizing Breast Treatment with Interstitial Laser Therapy." May 2003. 1-22.

Kelsey. "Revolutionizing Breast Treatment with Interstitial Laser Therapy." Feb. 2005. 1-18.

* cited by examiner

FIG. 1

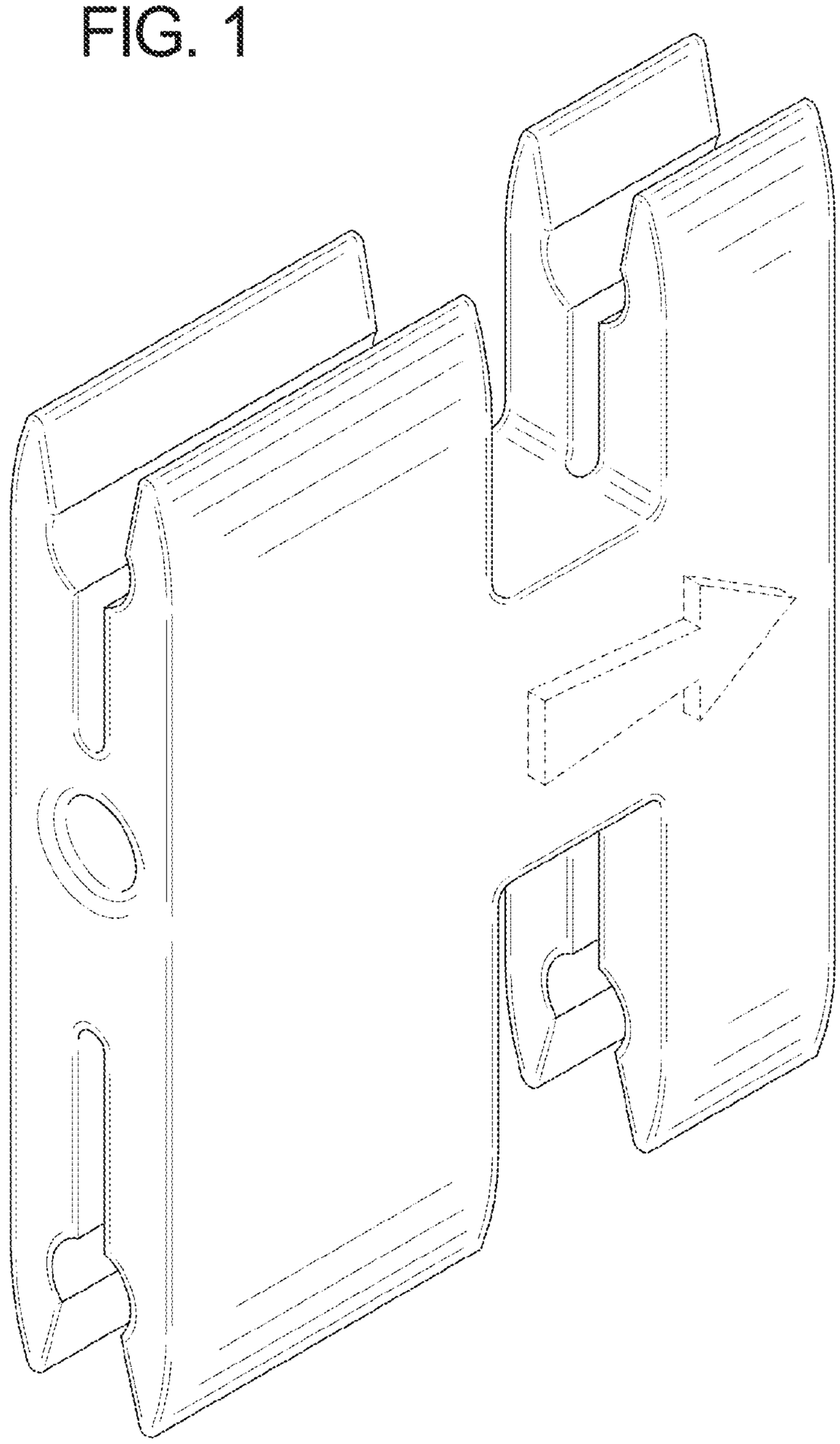

FIG. 2

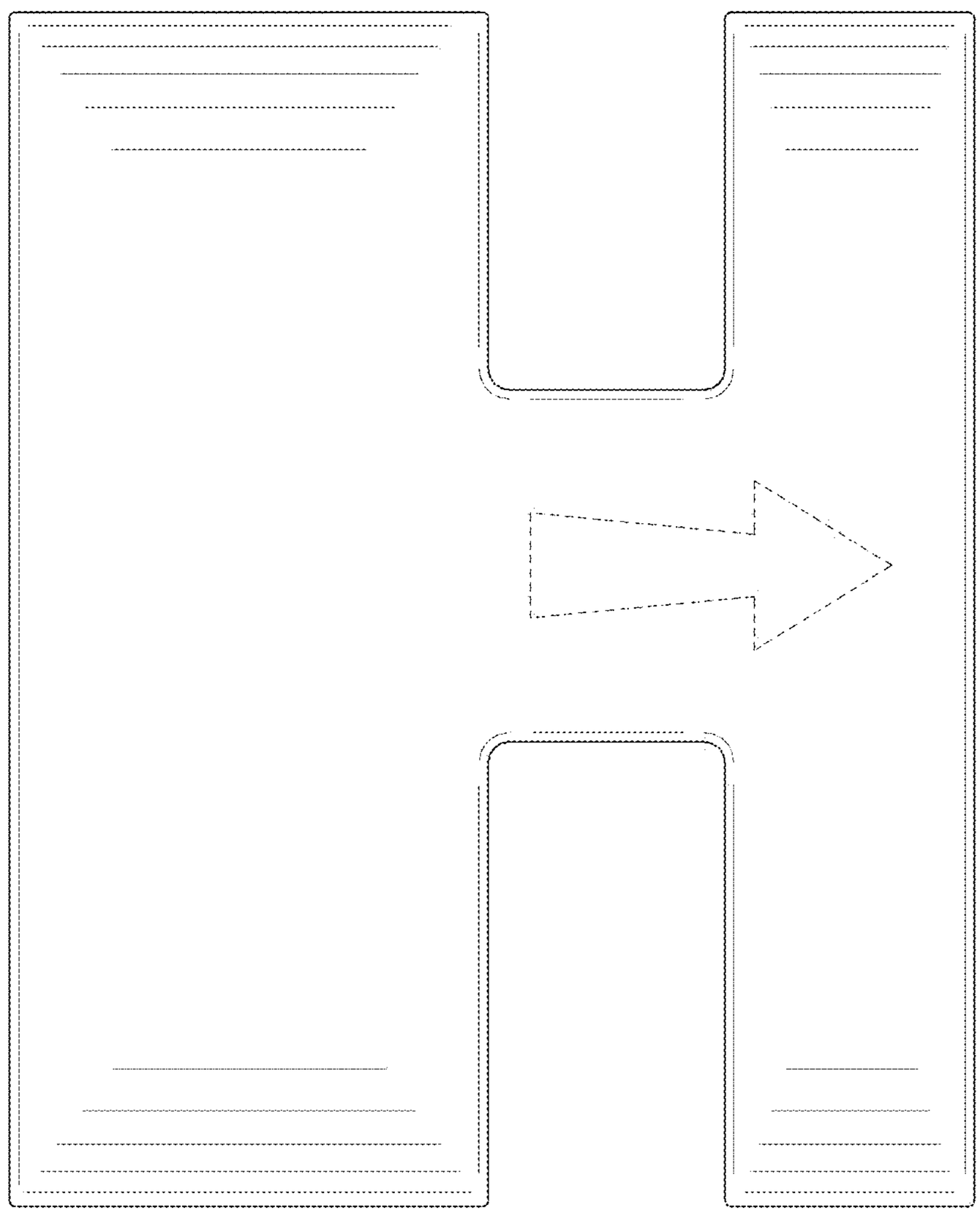

FIG. 3

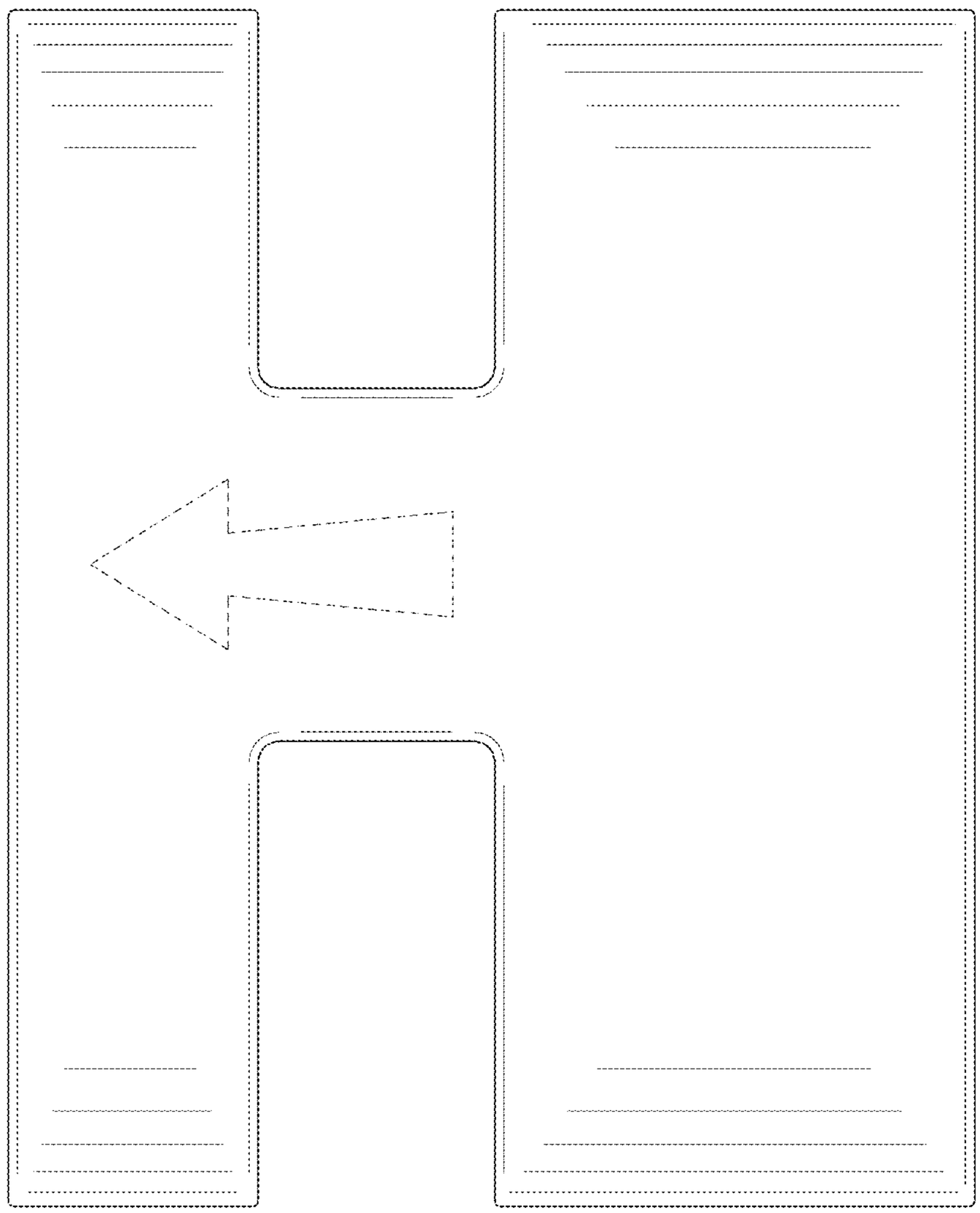

FIG. 4

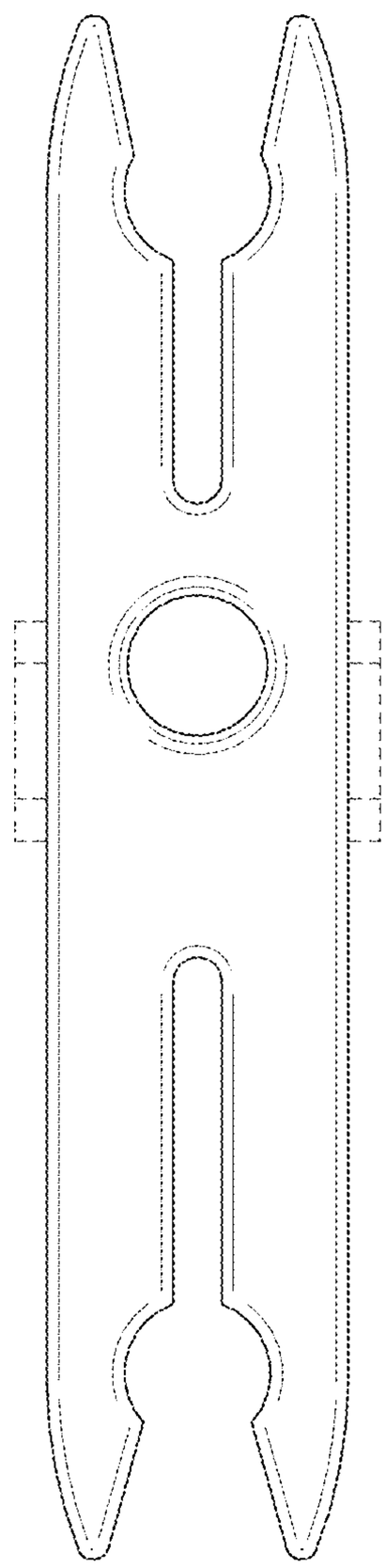

FIG. 5

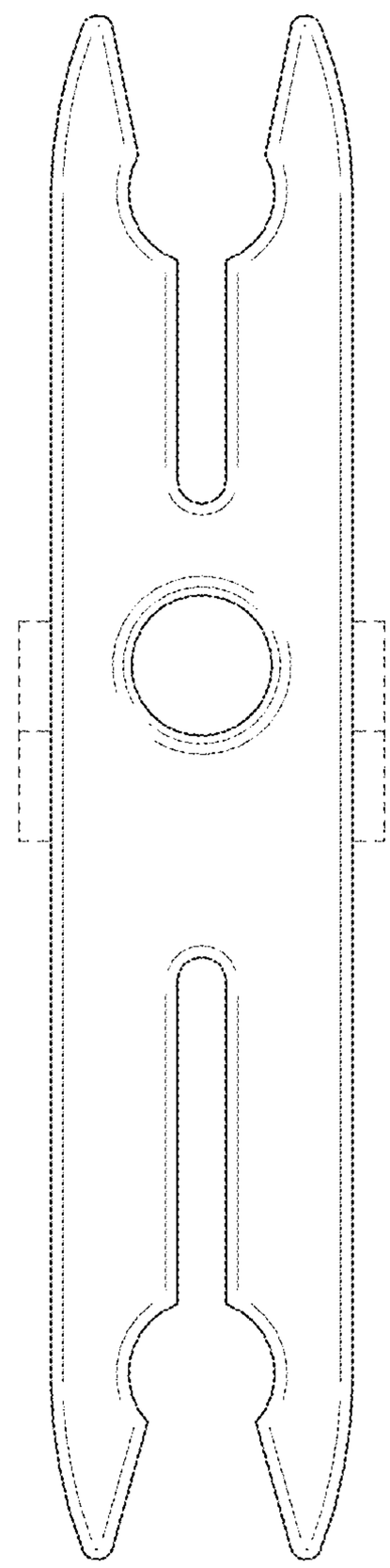

FIG. 6

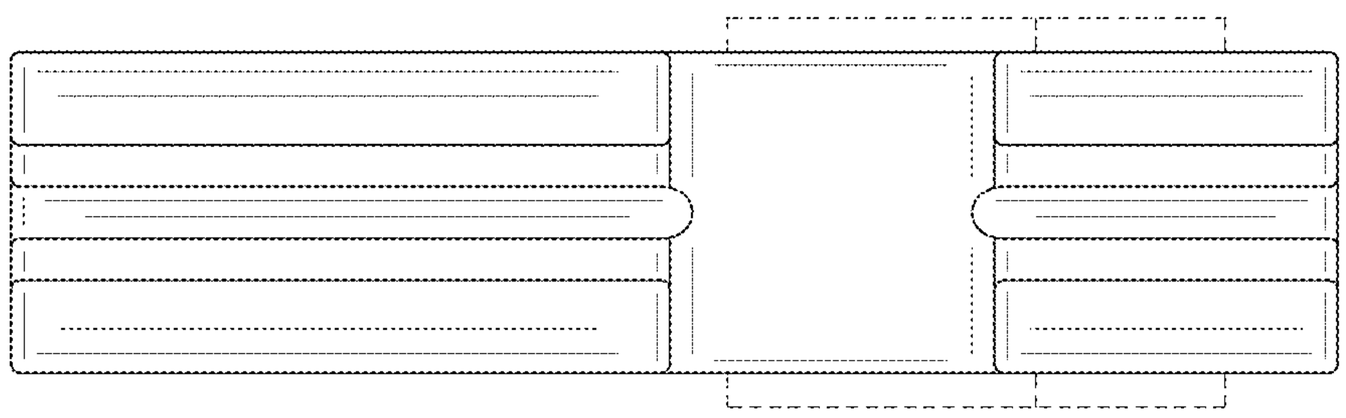
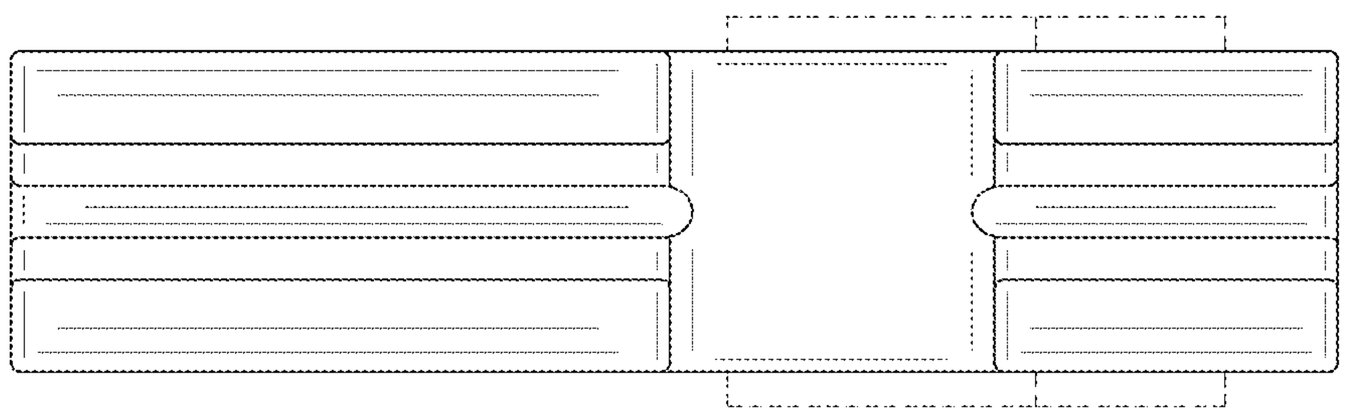
FIG. 7