US00D748681S

(12) United States Design Patent

Renski et al.

(10) Patent No.: US D748,681 S
(45) Date of Patent: ** Feb. 2, 2016

(54) **TIP FOR A GROUND ENGAGING MACHINE IMPLEMENT**

(71) Applicant: **CATERPILLAR, INC.**, Peoria, IL (US)

(72) Inventors: **William J. Renski**, Peoria, IL (US); **Thomas Marshall Congdon**, Dunlap, IL (US)

(73) Assignee: **Caterpillar Inc.**, Peoria, IL (US)

(**) Term: **14 Years**

(21) Appl. No.: **29/517,824**

(22) Filed: **Feb. 17, 2015**

Related U.S. Application Data

(62) Division of application No. 29/487,373, filed on Apr. 8, 2014, now Pat. No. Des. 727,980, which is a division of application No. 29/403,592, filed on Oct. 7, 2011, now Pat. No. Des. 706,311.

(51) **LOC (10) Cl.** **15-03**

(52) **U.S. Cl.**
USPC **D15/29**; D15/28

(58) **Field of Classification Search**
USPC D15/11, 28, 29; 37/456, 452, 450, 446, 37/454, 449, 453, 455, 903; 403/379.5, 403/DIG. 1; 111/152; 172/724, 730, 766, 172/770, 771, 721, 713, 699, 772
CPC Y10T 29/49826; Y10T 403/589; Y10T 403/7018; Y10T 403/7075; E02F 9/28; E02F 9/2825; E02F 9/2833; E02F 9/2866; E02F 9/2858; E02F 9/2808; E02F 9/2841
See application file for complete search history.

(56) **References Cited**

U.S. PATENT DOCUMENTS

1,220,186 A 3/1917 Chambers
1,384,701 A 7/1921 McMonegal

(Continued)

FOREIGN PATENT DOCUMENTS

CL 2068-1995 10/1996
CL 391-1998 11/1998

(Continued)

OTHER PUBLICATIONS

Caterpillar Inc., Cat® K Series™ Tooth Systems, brochure (4 pages), 2006.

(Continued)

Primary Examiner — Mark Goodwin
(74) *Attorney, Agent, or Firm* — Saidman DesignLaw Group, LLC

(57) **CLAIM**

The ornamental design for a tip for a ground engaging machine implement, as shown and described.

DESCRIPTION

FIG. **1** is a perspective view of a first embodiment of a tip for a ground engaging machine implement showing our new design;
FIG. **2** is a front view thereof;
FIG. **3** is a front view thereof with the front elevated;
FIG. **4** is a left side view thereof;
FIG. **5** is a right side view thereof;
FIG. **6** is a rear view thereof;
FIG. **7** is a top view thereof;
FIG. **8** is a bottom view thereof;
FIG. **9** is a rear perspective view thereof;
FIG. **10** is a perspective view of a second embodiment of a tip for a ground engaging machine implement showing our new design;
FIG. **11** is a front view thereof;
FIG. **12** is a front view thereof with the front elevated;
FIG. **13** is a left side view thereof;
FIG. **14** is a right side view thereof;
FIG. **15** is a rear view thereof;
FIG. **16** is a top view thereof;
FIG. **17** is a bottom view thereof; and,
FIG. **18** is a rear perspective view thereof.
The broken lines illustrate structure or features that form no part of the claimed design.

1 Claim, 10 Drawing Sheets

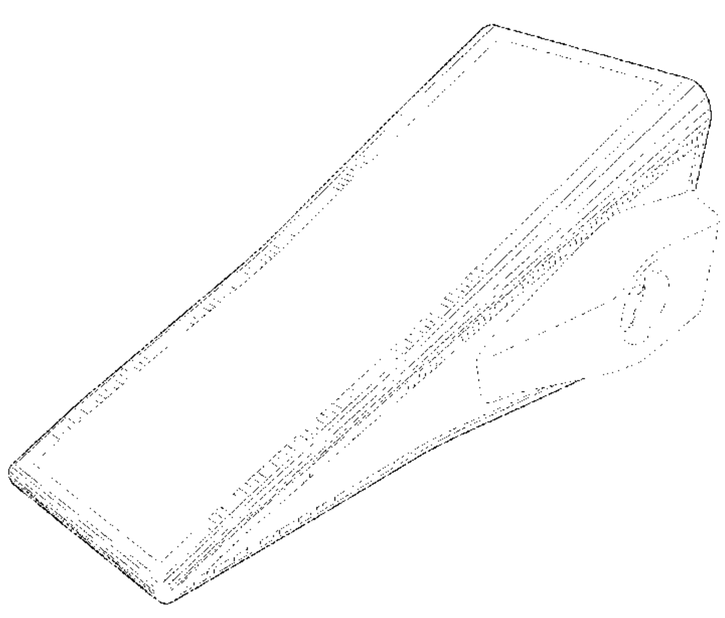

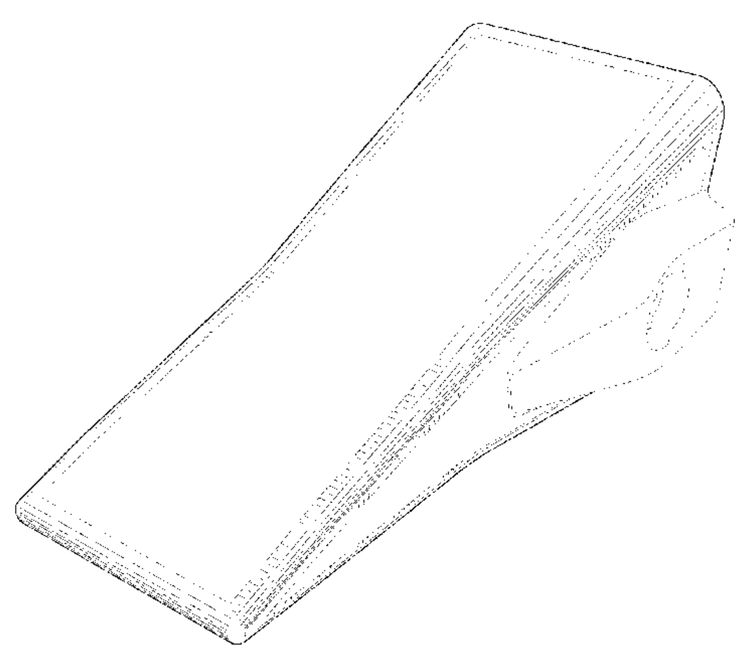

(56) **References Cited**

U.S. PATENT DOCUMENTS

1,571,782	A	2/1926	Andrews
1,856,930	A	5/1932	Robin
2,427,651	A	9/1947	Baer
D182,143	S	2/1958	Petersen
2,982,035	A	5/1961	Stephenson
3,019,537	A	2/1962	Stephenson
3,312,004	A	4/1967	Johnson
3,623,247	A	11/1971	Stepe
3,774,324	A	11/1973	Lafond
3,823,496	A	7/1974	Querci et al.
3,832,077	A	8/1974	Von Mehren
4,027,408	A	6/1977	Ramella et al.
D251,431	S	3/1979	Klett et al.
D252,461	S	7/1979	Korpi
4,182,057	A	1/1980	Klett et al.
D255,119	S	5/1980	Korpi
4,231,173	A	11/1980	Davis
D275,859	S	10/1984	Nilsson
4,516,340	A	5/1985	Launder
D296,442	S	6/1988	Broomhall
4,761,900	A	8/1988	Emrich
4,776,113	A	10/1988	Bedford et al.
4,848,013	A	7/1989	Bowman et al.
4,932,145	A	6/1990	Reeves
4,949,481	A	8/1990	Fellner
4,965,945	A	10/1990	Emrich
4,980,980	A	1/1991	Schadov et al.
5,018,283	A	5/1991	Fellner
D336,476	S	6/1993	Garman
D339,592	S	9/1993	Johansson
D345,364	S	3/1994	Robinson
D352,044	S	11/1994	Hahn
5,423,138	A	6/1995	Livesay et al.
D365,577	S	12/1995	Ruvang
5,561,925	A	10/1996	Livesay
D385,286	S	10/1997	Moreno
5,709,043	A	1/1998	Jones et al.
D391,583	S	3/1998	Moreno
D392,292	S	3/1998	Moreno
D395,661	S	6/1998	Moreno
5,806,216	A	9/1998	Renski
D399,511	S	10/1998	Launder et al.
5,852,888	A	12/1998	Cornelius
D408,422	S	4/1999	Moreno
D410,657	S	6/1999	Launder et al.
D413,338	S	8/1999	Pueyo Molina
5,937,550	A	8/1999	Emrich
D414,193	S	9/1999	Launder et al.
D415,173	S	10/1999	Zaun
5,983,534	A	11/1999	Robinson et al.
D417,877	S	12/1999	Launder et al.
D429,256	S	8/2000	Zaun
D429,258	S	8/2000	Zaun
6,321,471	B2	11/2001	Fernandez Muńoz et al.
D454,891	S	3/2002	Ketting et al.
D460,464	S	7/2002	Ketting et al.
D461,198	S	8/2002	Ketting et al.
D461,832	S	8/2002	Ketting et al.
6,477,796	B1	11/2002	Cornelius
6,745,503	B1	6/2004	Moreno et al.
D499,749	S	12/2004	Launder et al.
6,836,983	B2	1/2005	Moreno et al.
6,865,828	B1	3/2005	Molino et al.
D505,137	S	5/2005	Steinlage et al.
D512,078	S	11/2005	Poutre
D527,029	S	8/2006	Launder et al.
7,168,193	B2	1/2007	Moreno et al.
D552,632	S	10/2007	De Martiis
D560,232	S	1/2008	De Martiis
7,367,144	B2	5/2008	Jones et al.
D614,206	S	4/2010	Ruvang
7,762,015	B2	7/2010	Smith et al.
D624,943	S	10/2010	Gibbon
D706,307	S	6/2014	Renski et al.
D706,311	S	6/2014	Renski et al.
D706,312	S	6/2014	Renski et al.
D706,839	S	6/2014	Renski et al.
D706,840	S	6/2014	Renski et al.
D707,263	S	6/2014	Renski et al.
D707,264	S	6/2014	Renski et al.
2008/0028644	A1	2/2008	Almendros et al.

FOREIGN PATENT DOCUMENTS

CL	1193-1999		9/1999
CL	223-1999		11/1999
CL	1457-1999		11/1999
CL	1583-1999		6/2000
CL	2671-2005		7/2006
CL	3115-2005		9/2006
CL	3116-2005		9/2006
CL	173-2008		8/2008
CL	174-2008		8/2008
CL	2524-2008		1/2009
CL	1764-2008		7/2009
CL	618-2010		11/2010
CL	739-2010		12/2010
CL	291-2012		11/2012
EM	000089099-0001-0003		10/2003
EM	000877477-0001-0009		1/2008
EM	000895396-0001-0015		3/2008
EP	0 411 486	A1	2/1991
EP	2 011 927	A2	1/2009
GB	1049195		3/1988
GB	1050103		4/1988
GB	2010025		4/1990
GB	2010026		4/1990
GB	2057051		12/1995
GB	2057052		12/1995
GB	2057053		12/1995
GB	2060104		4/1996
GB	2060105		4/1996
GB	2057055		5/1996
GB	2091441		10/1999
GB	2091502		10/1999
GB	2095654		3/2000
GB	2097590		3/2000
GB	2097591		4/2000
GB	2097592		4/2000
GB	2097593		5/2000
GB	2104929		3/2001
GB	2106421		4/2001

OTHER PUBLICATIONS

Caterpillar Inc., "Cat Backhoe Loader Options," published Jan. 1, 2005.

U.S. Appl. No. 13/644,518, filed Oct. 4, 2012, entitled "Implement Tooth Assembly with Tip and Adapter".

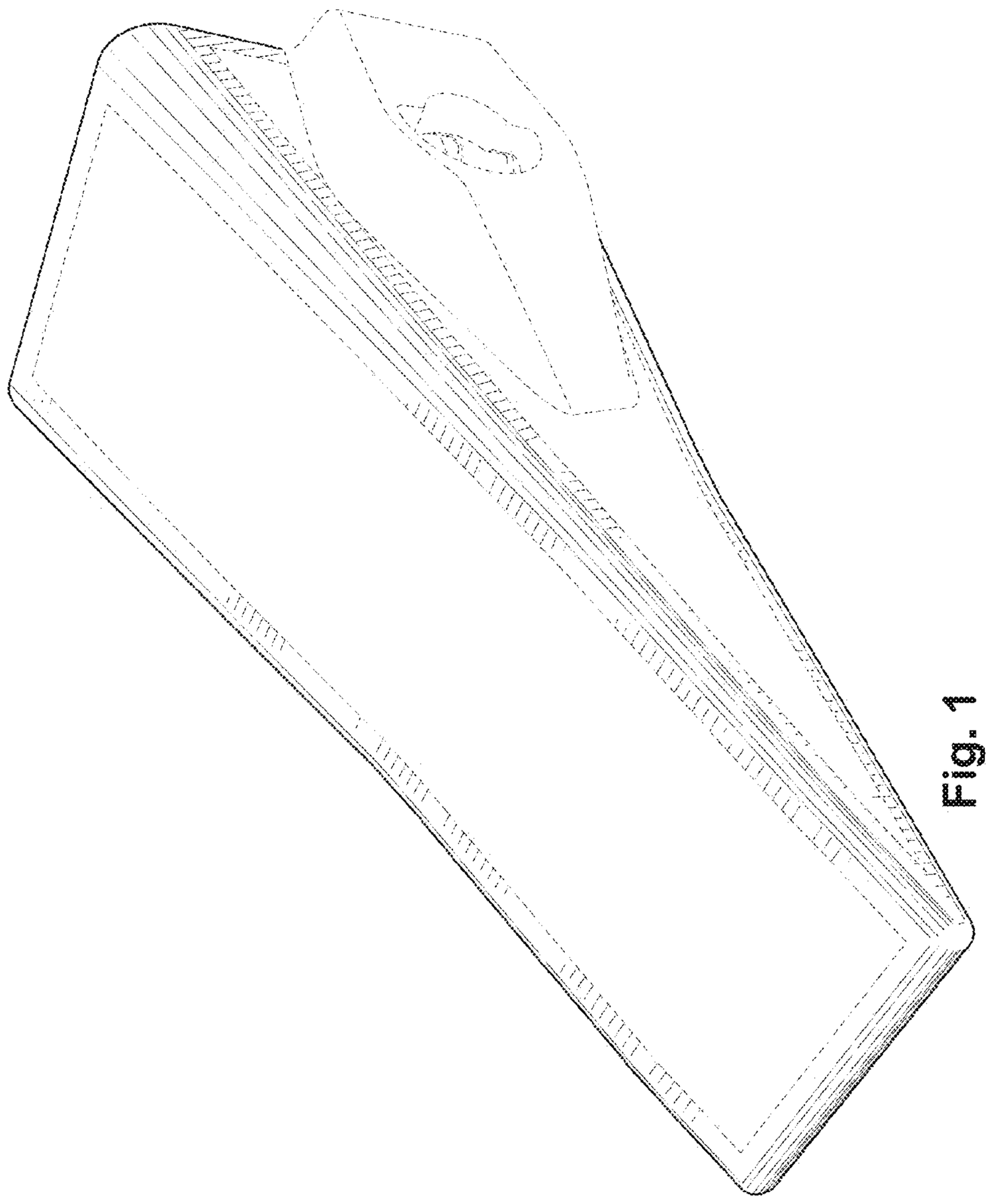

Fig. 1

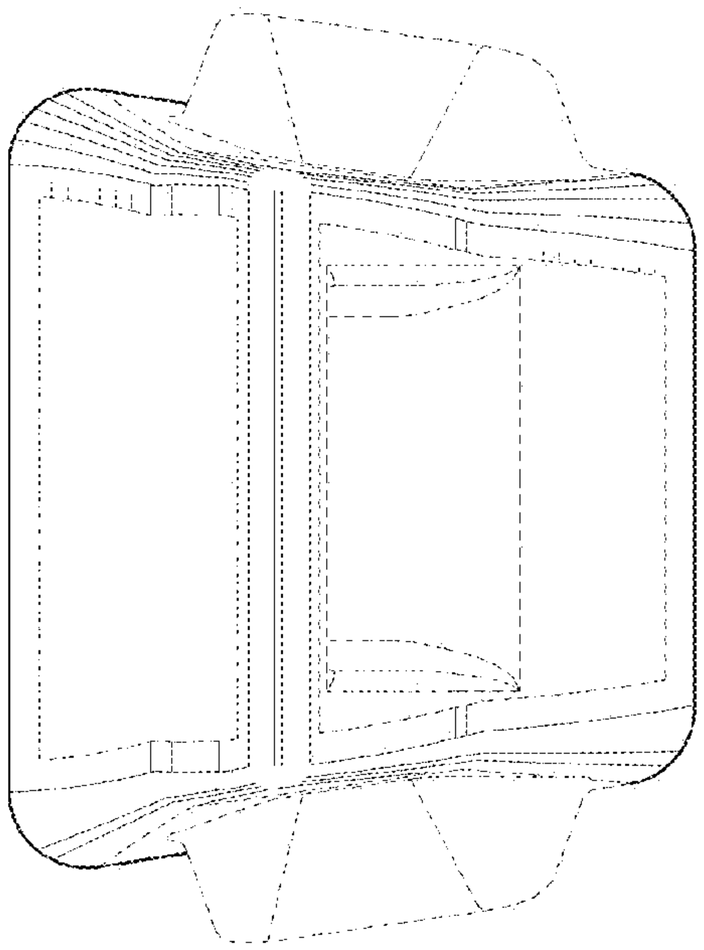

FIG. 3

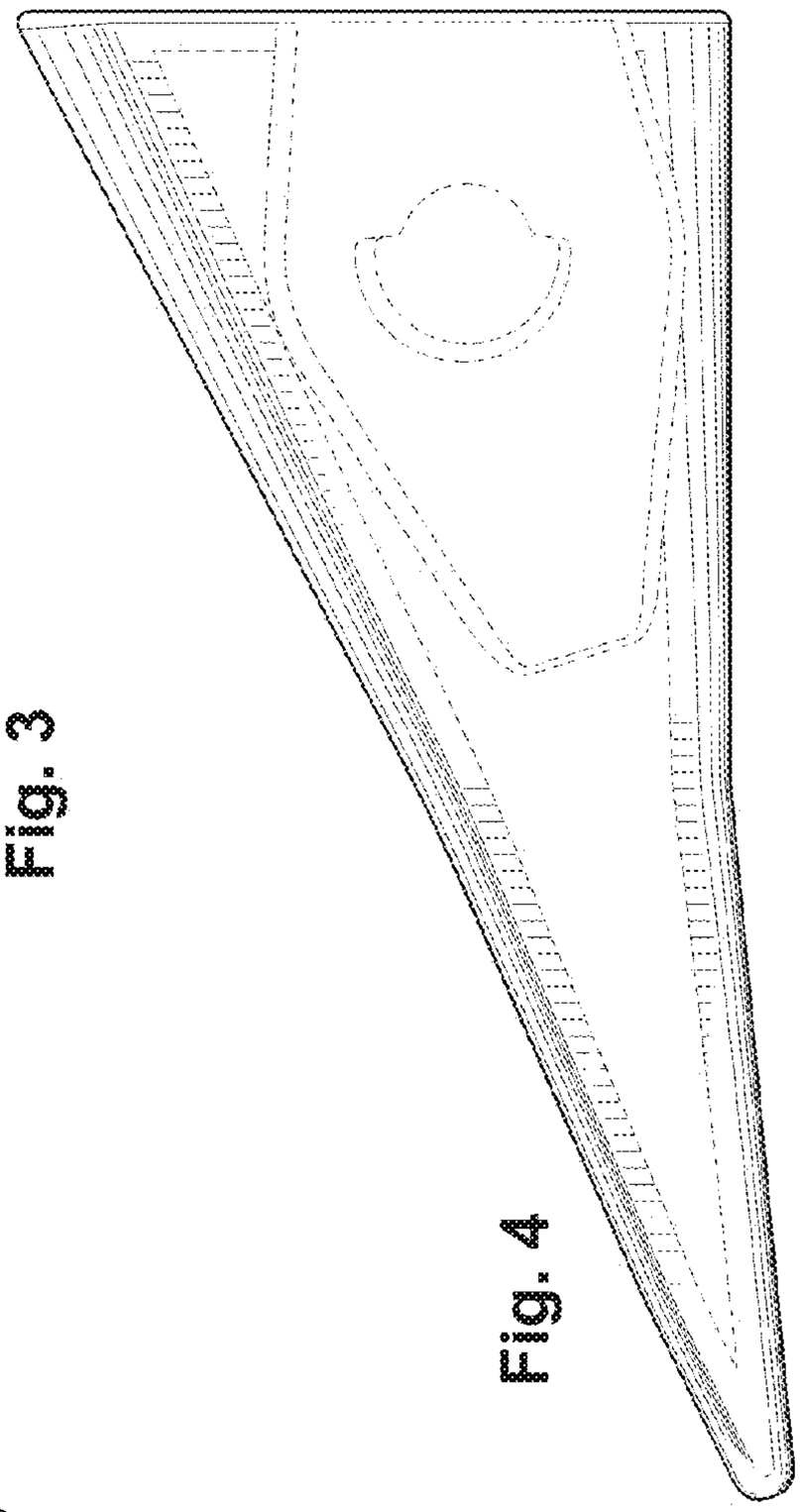

FIG. 4

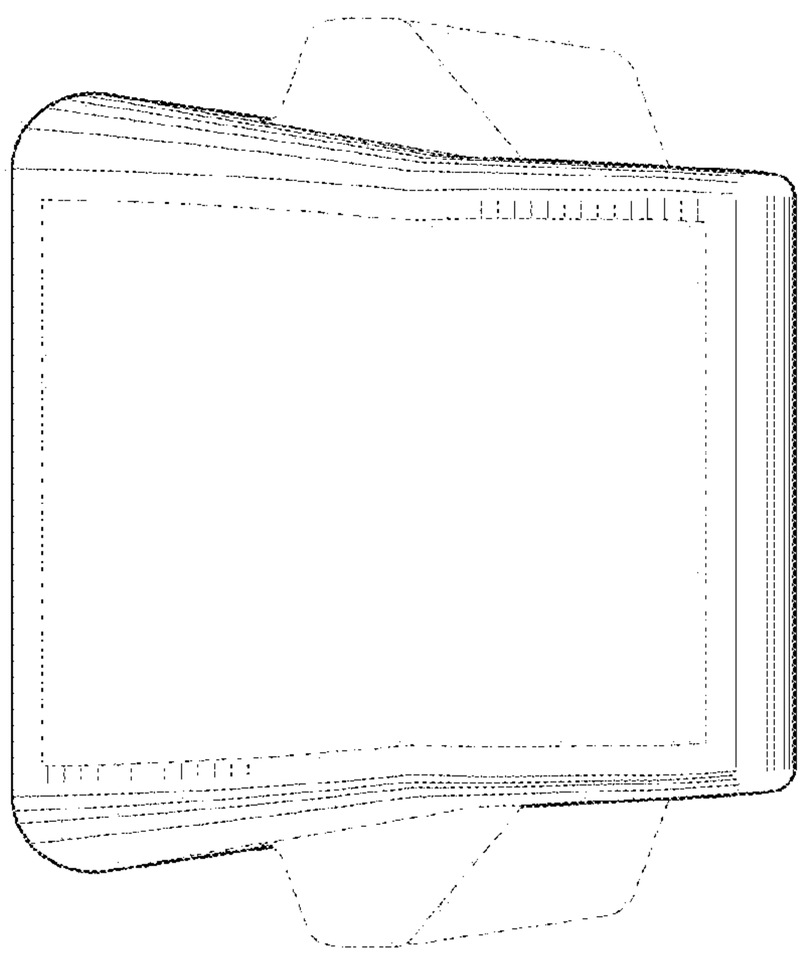

FIG. 2

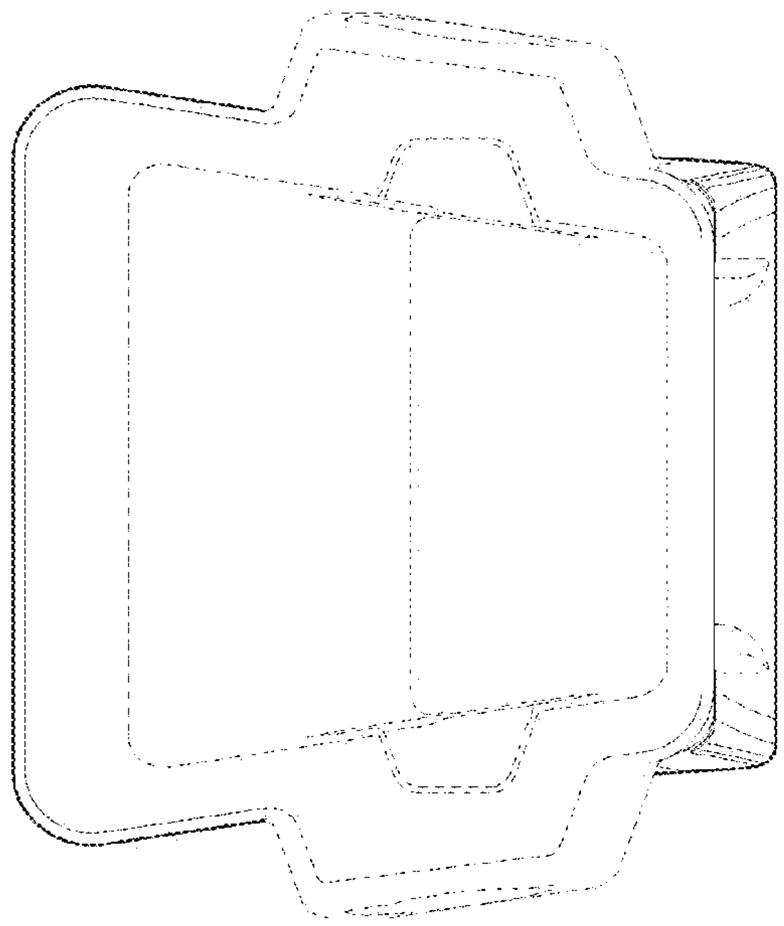

Fig. 6

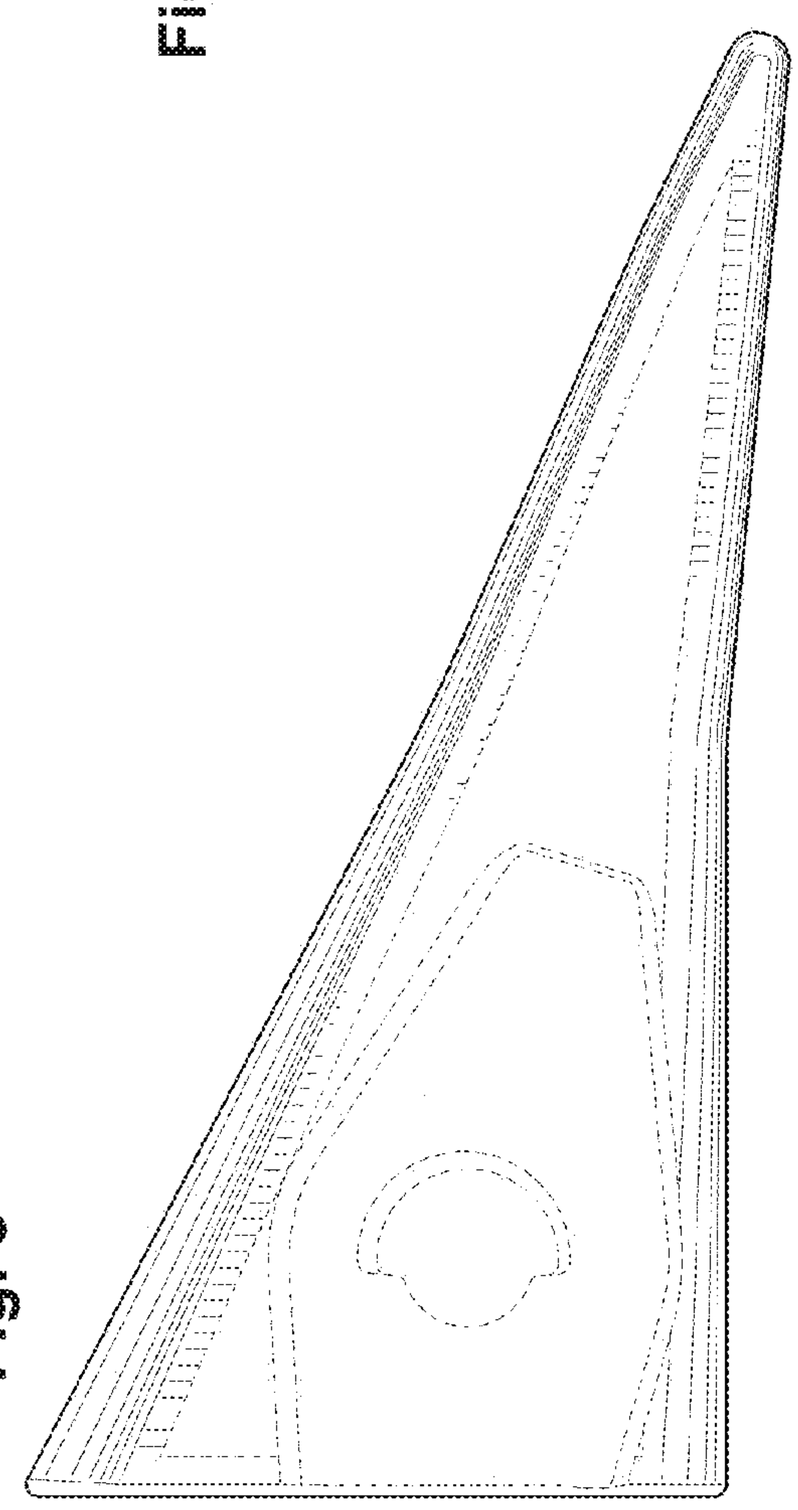

Fig. 5

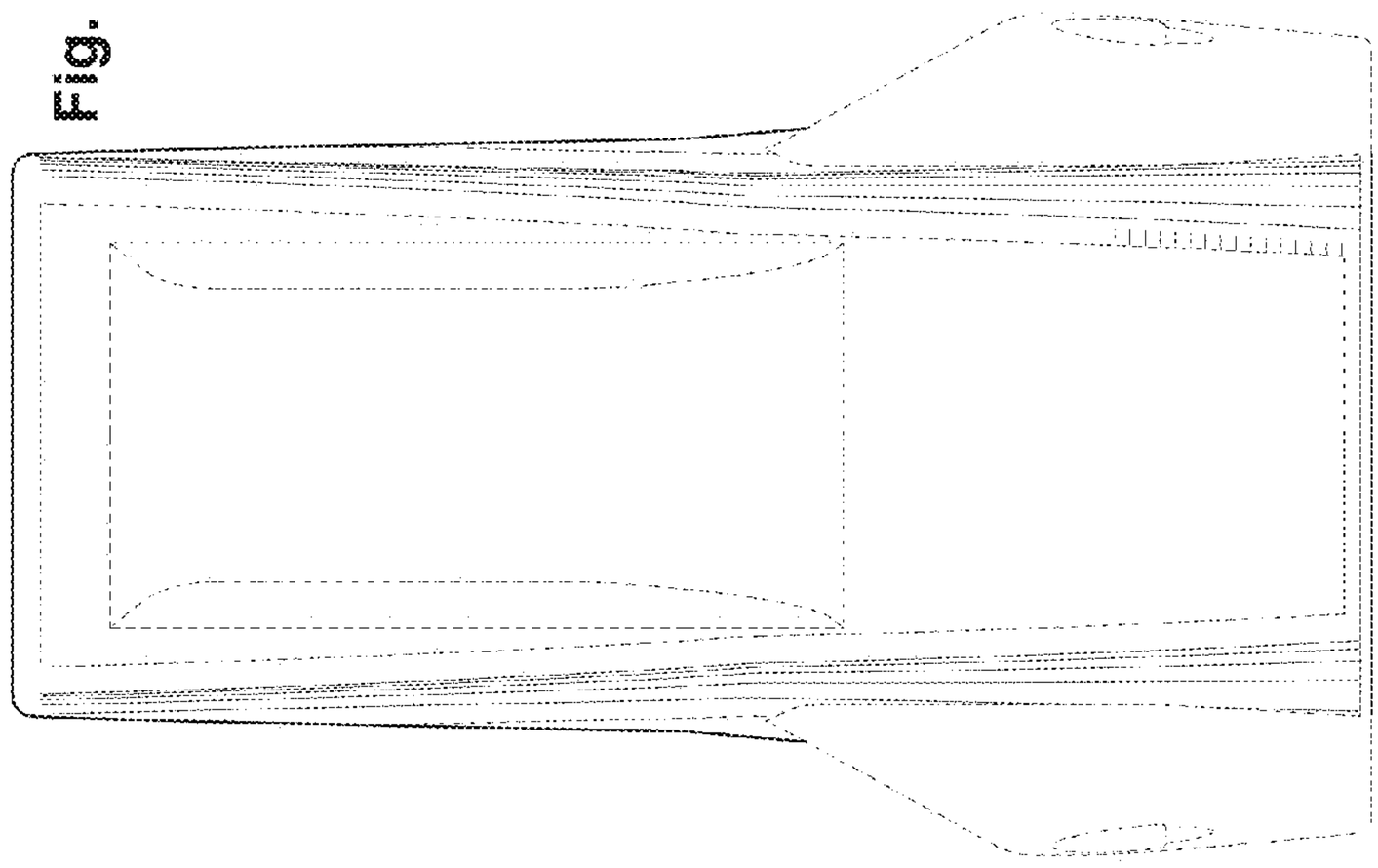

Fig. 8

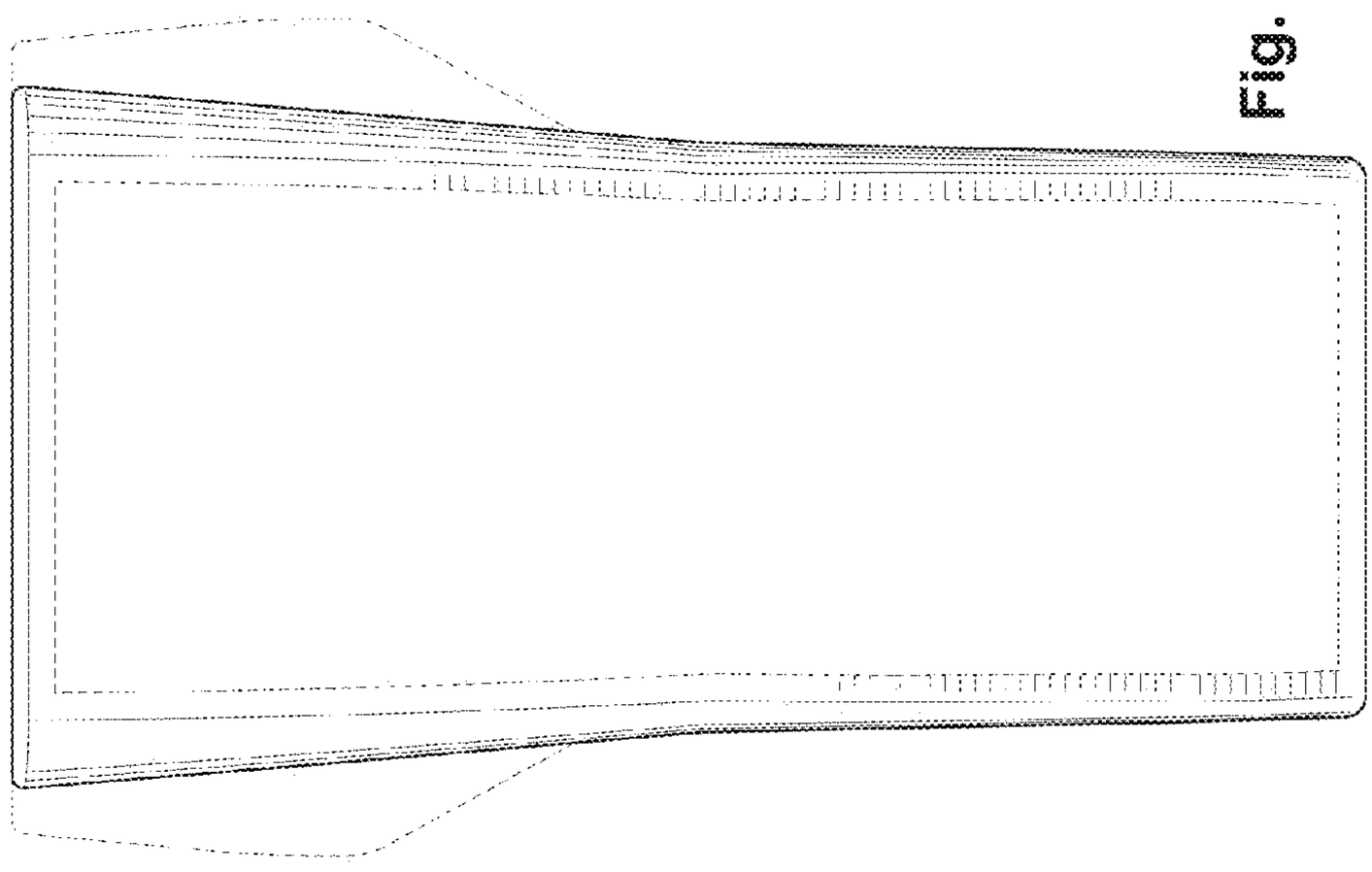

Fig. 7

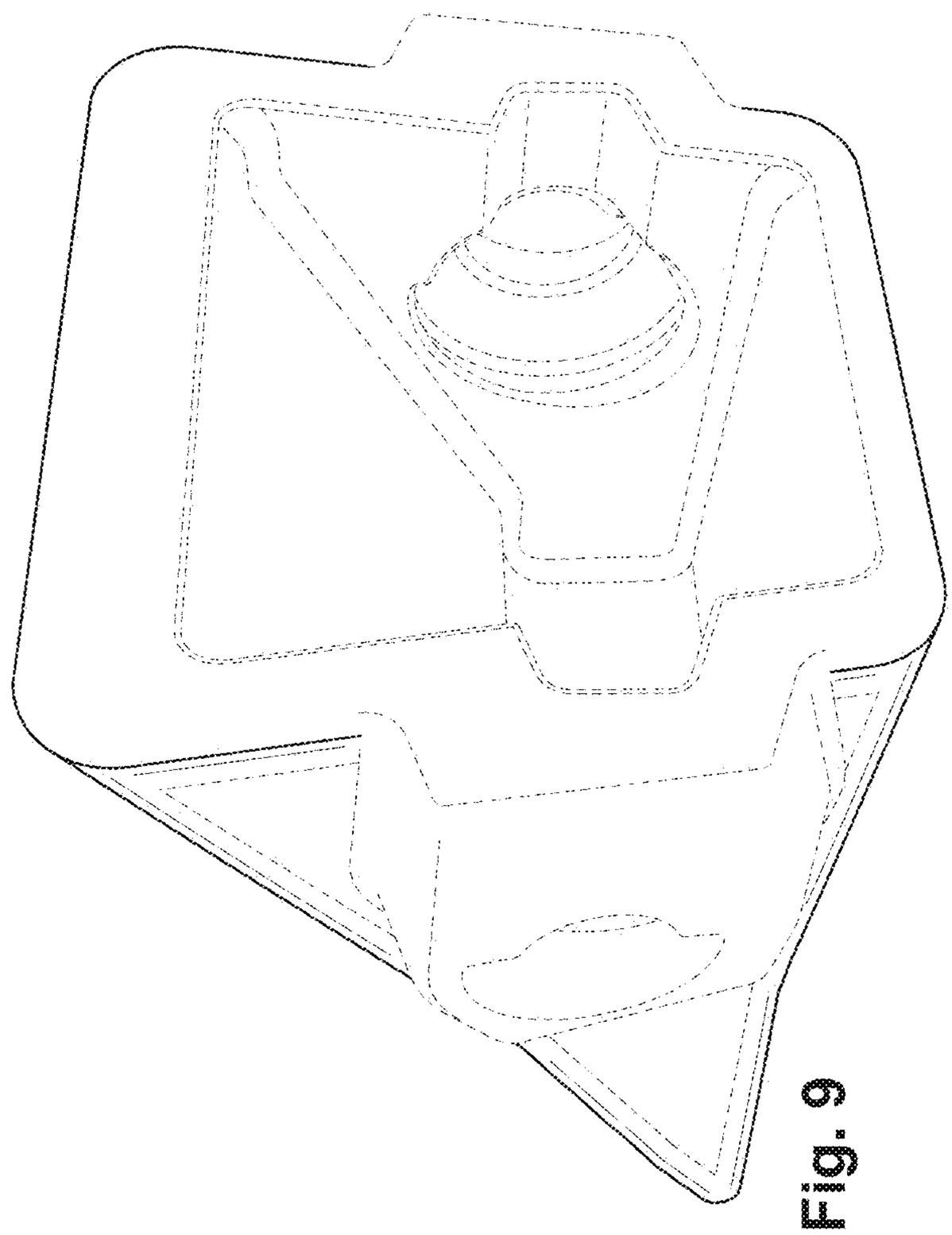

Fig. 9

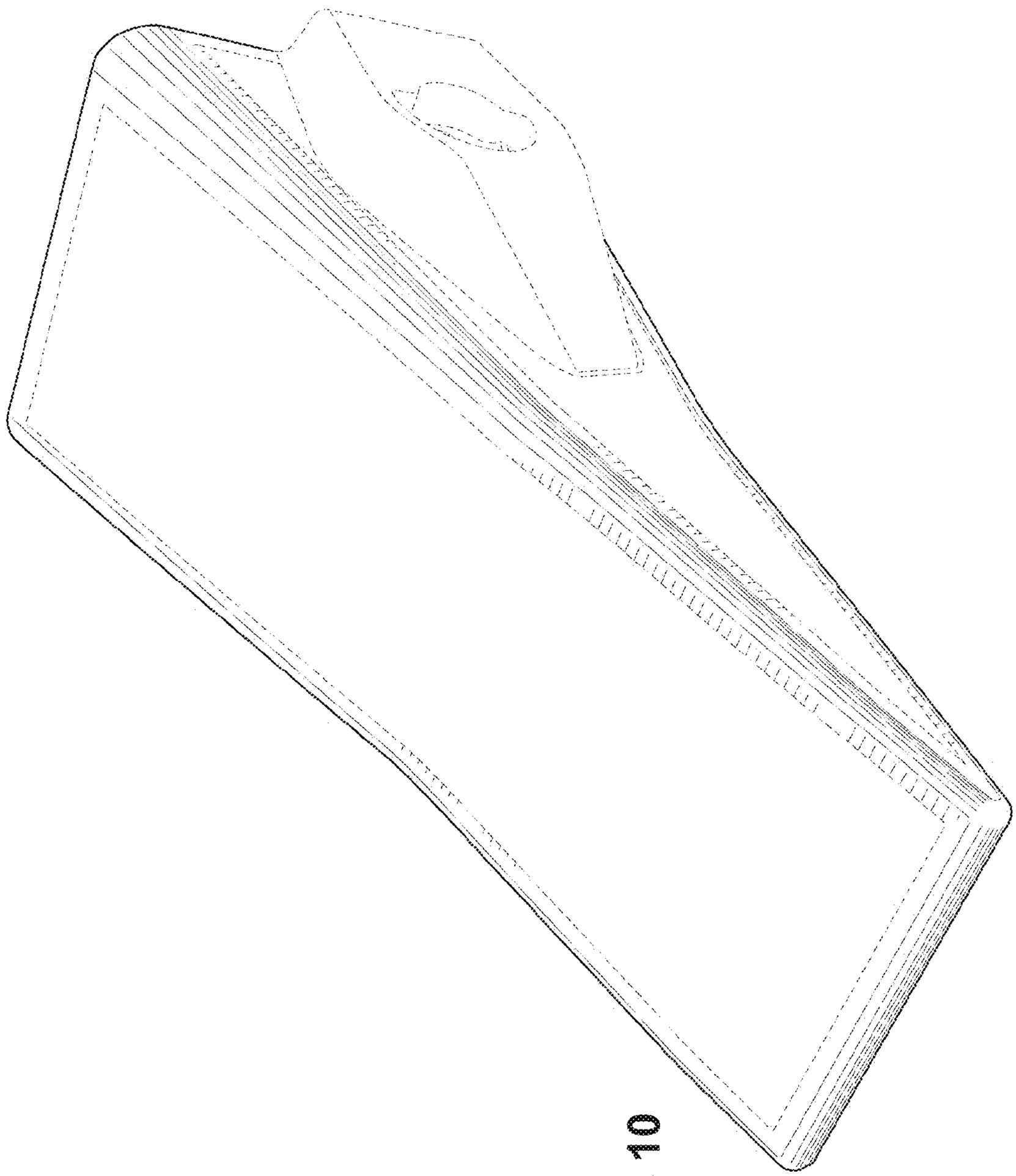

Fig. 10

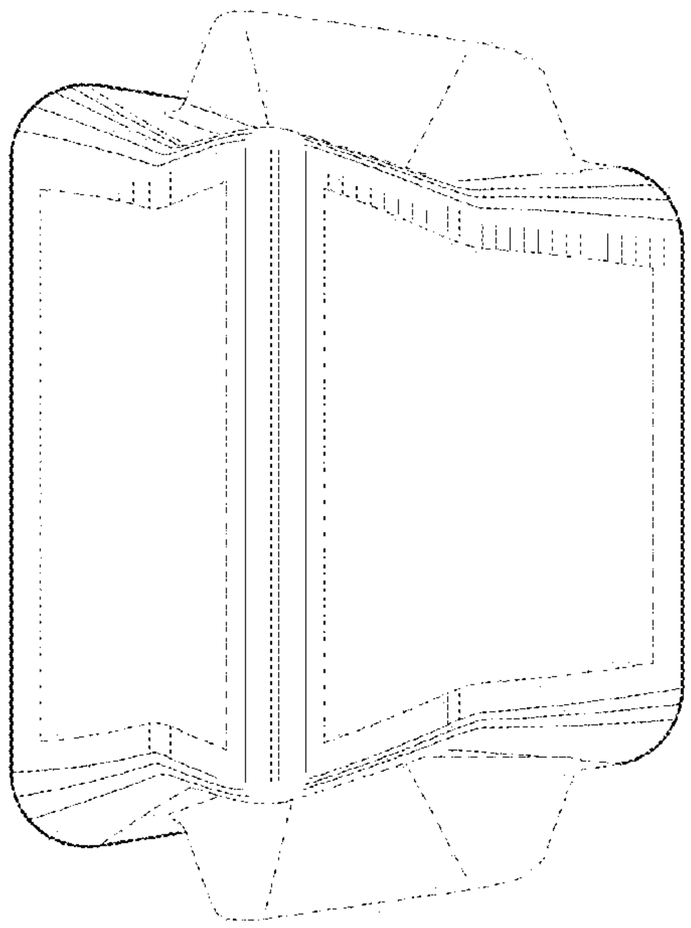

Fig. 12

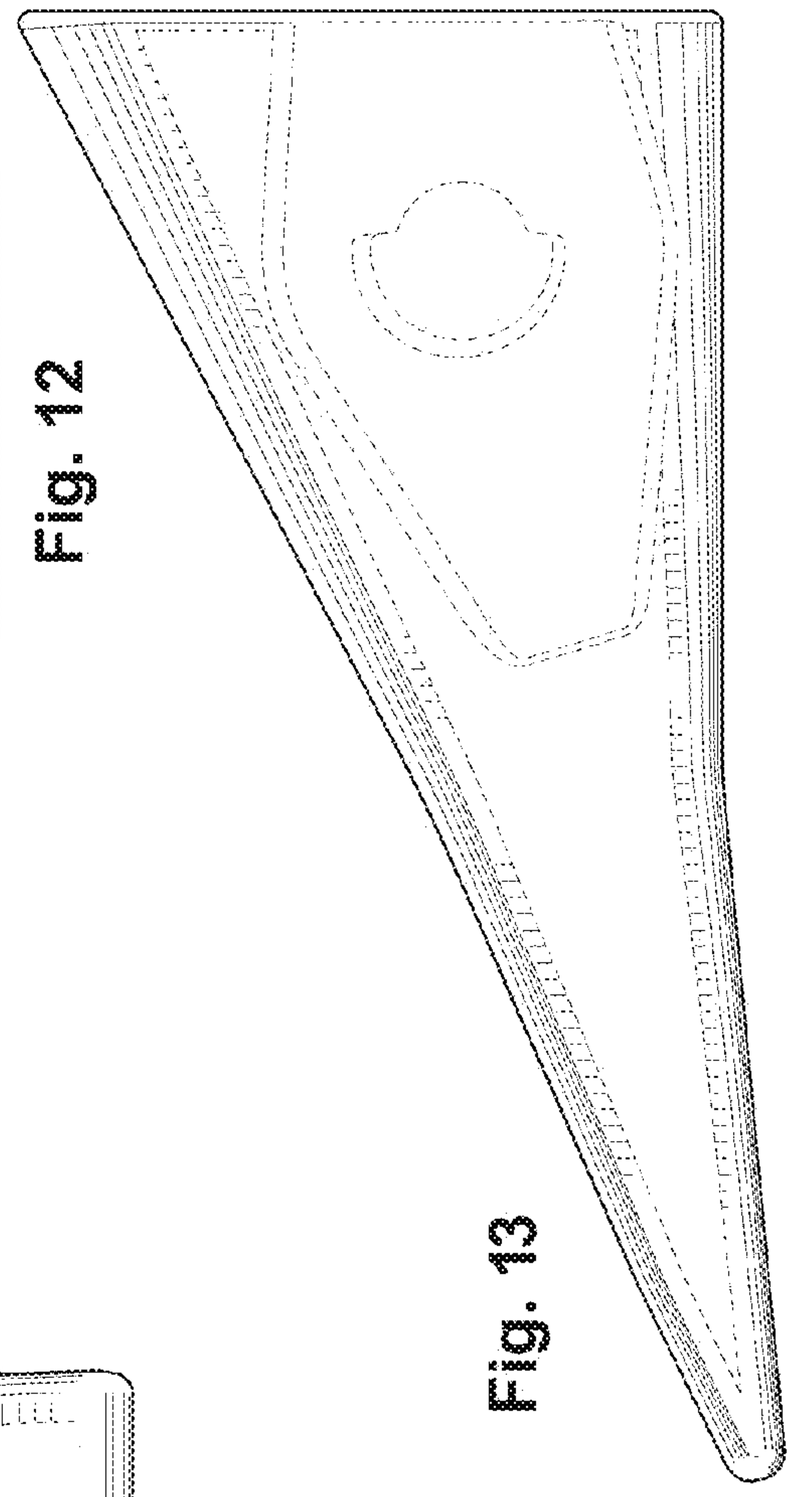

Fig. 13

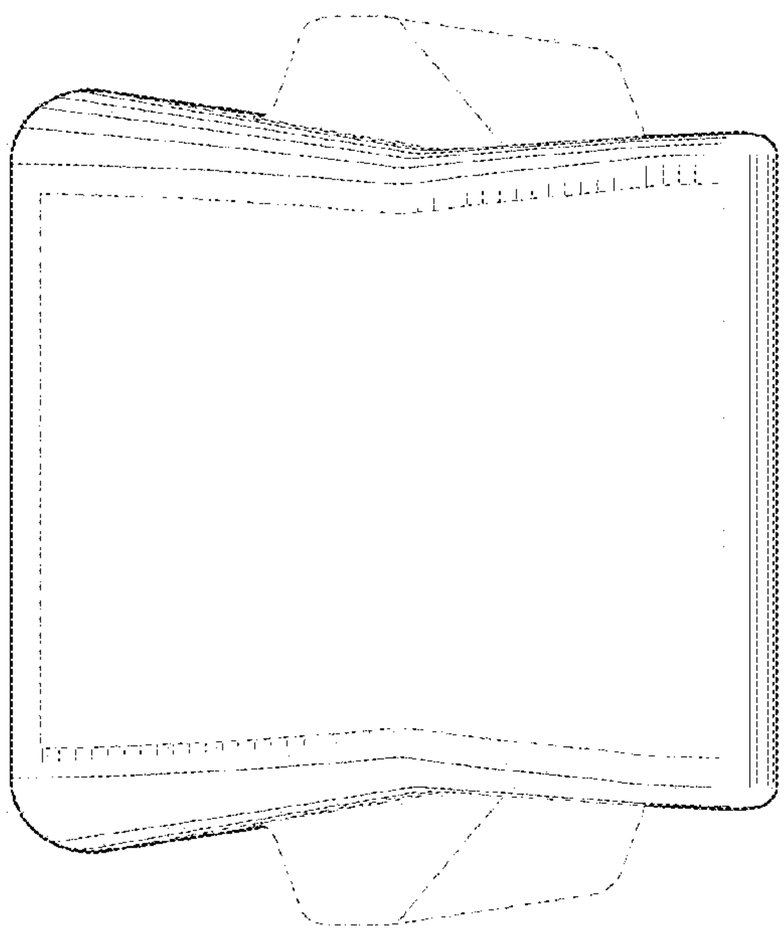

Fig. 11

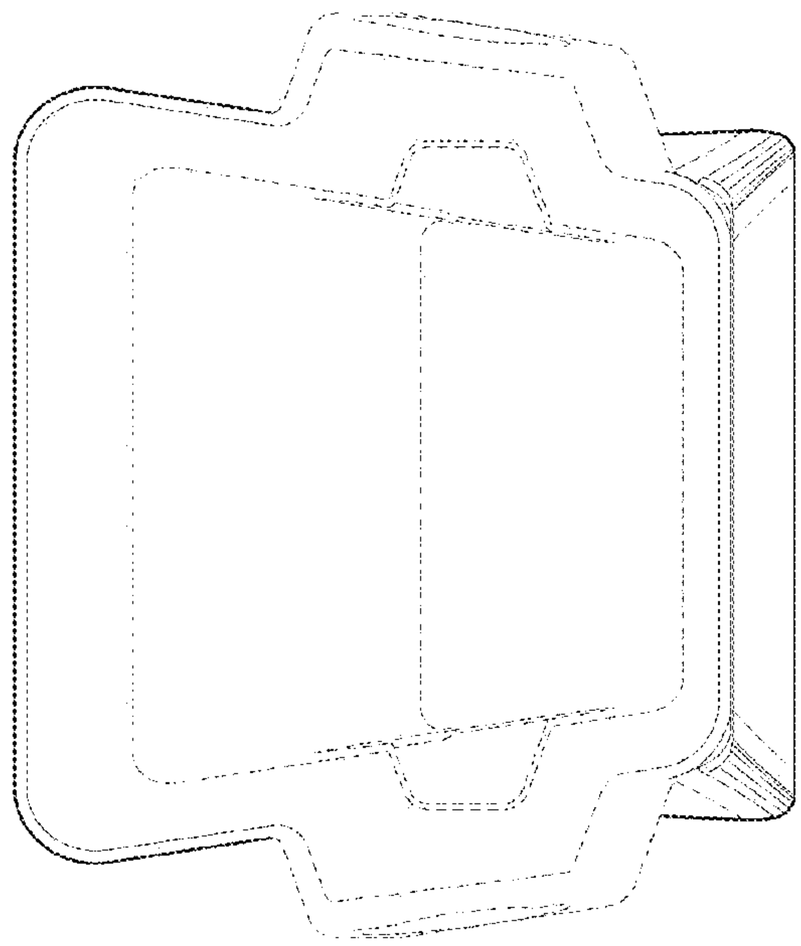

Fig. 15

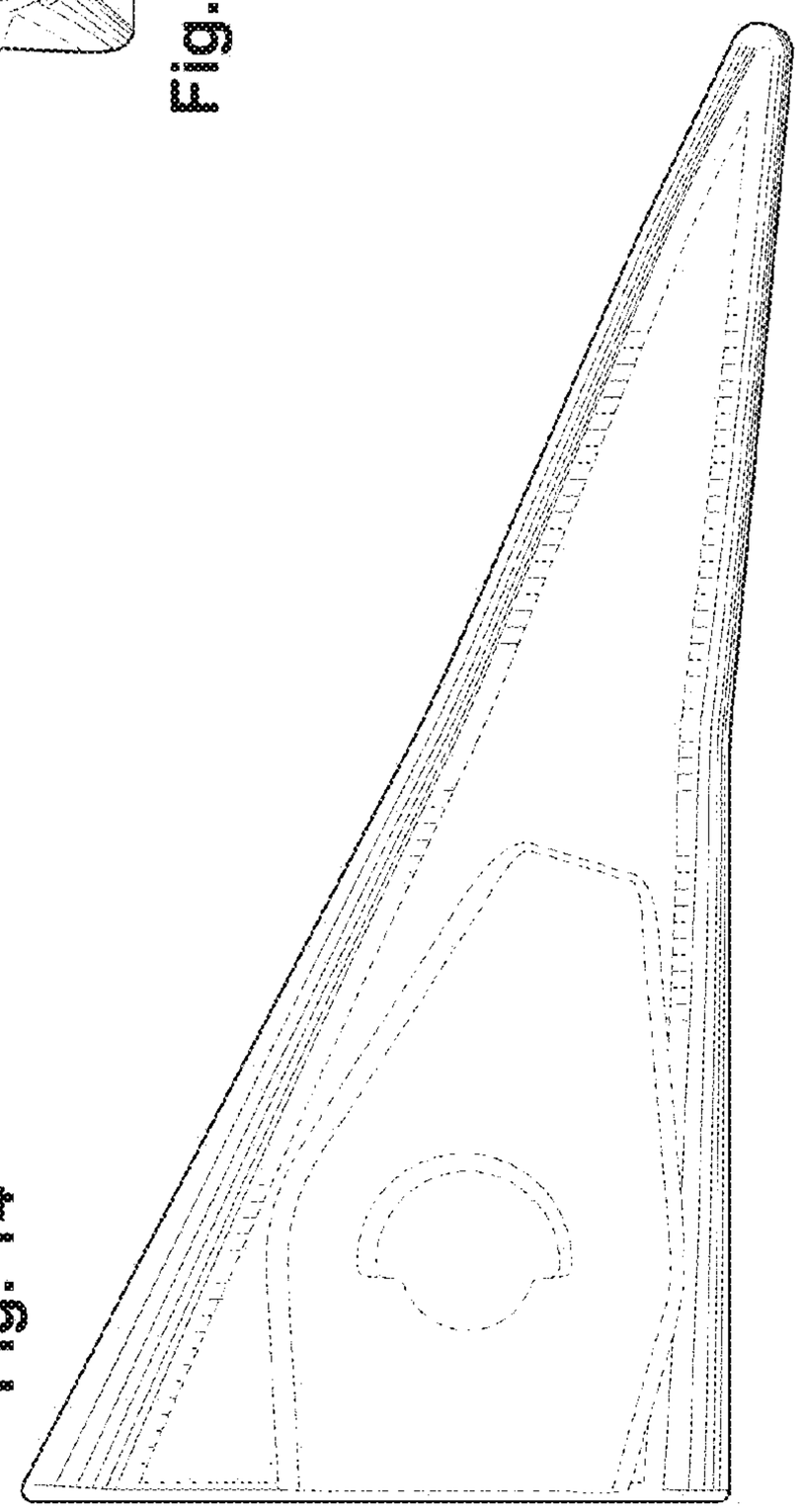

Fig. 14

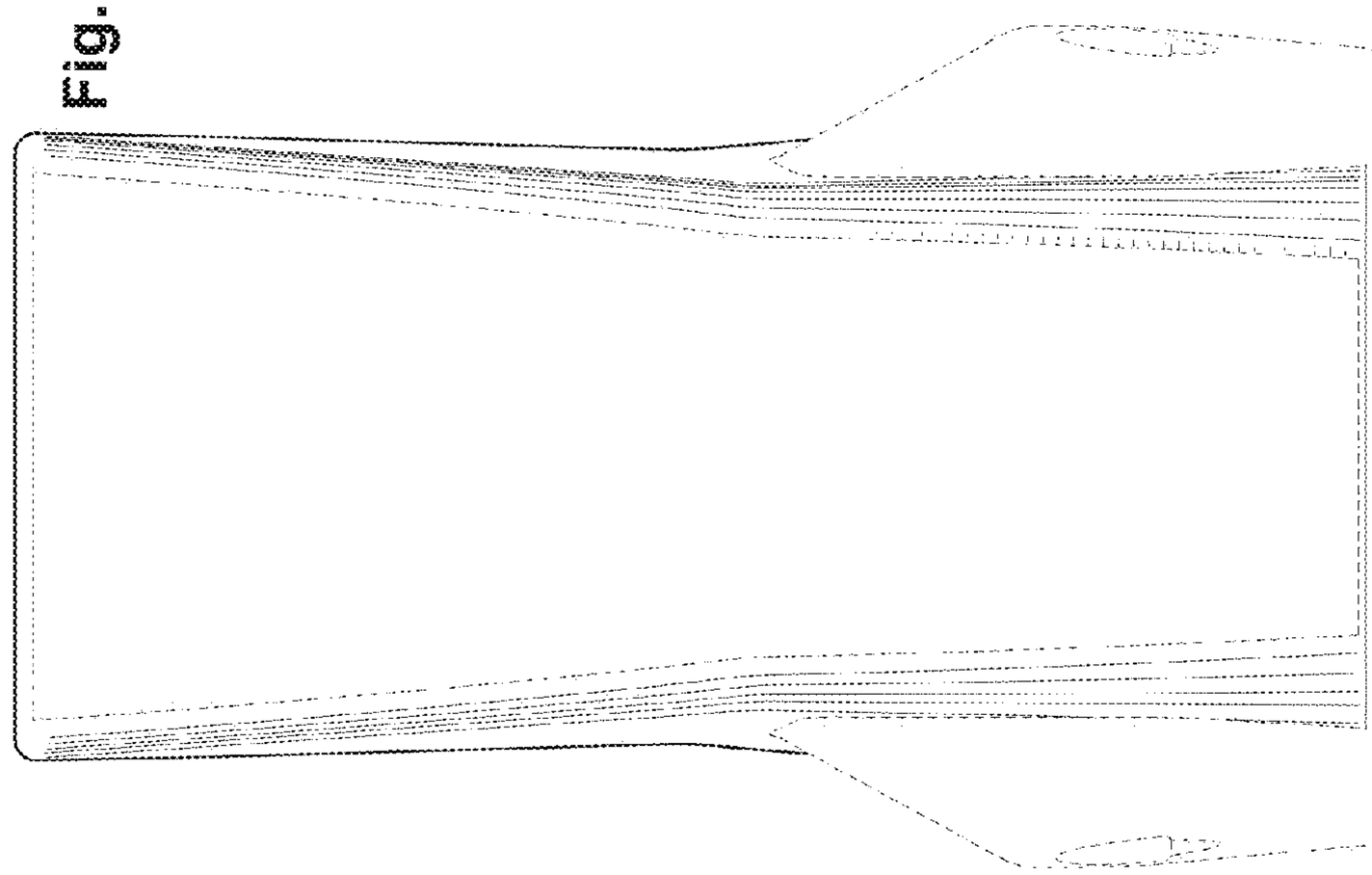

FIG. 17

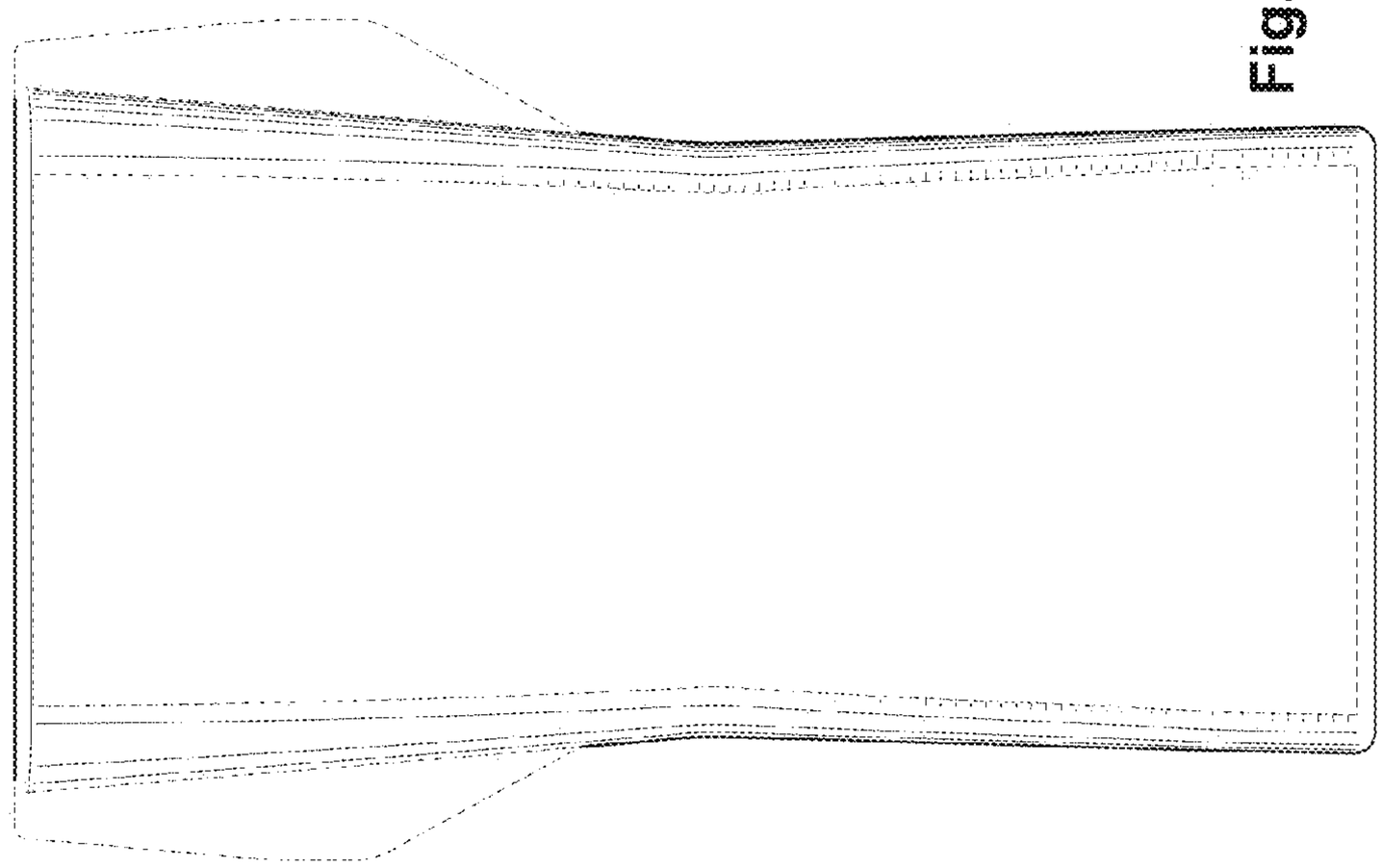

FIG. 16

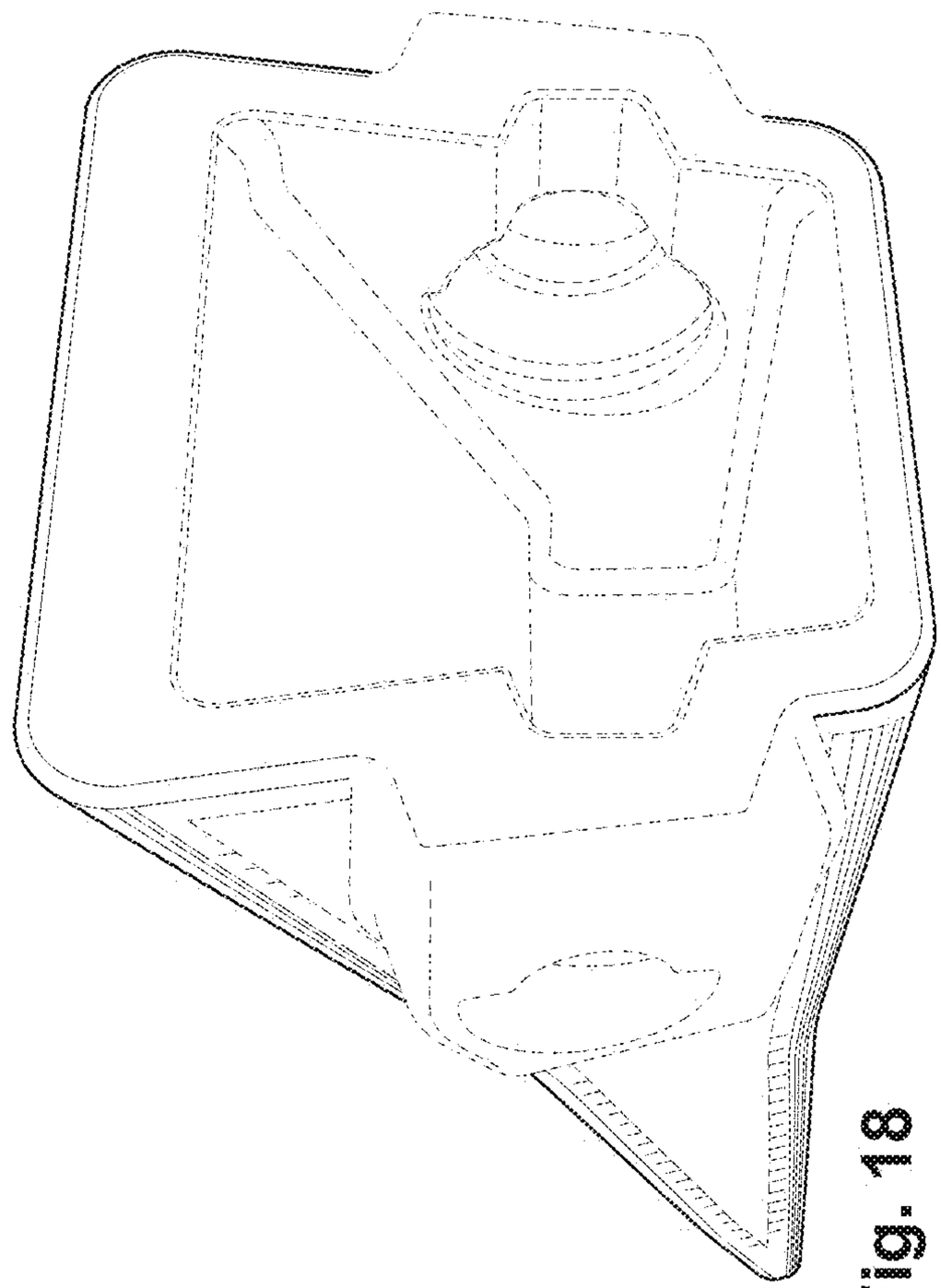

Fig. 18