US00D748464S

(12) United States Design Patent
Kury

(10) Patent No.: US D748,464 S
(45) Date of Patent: ** Feb. 2, 2016

(54) **COUPLING NUT**

(71) Applicant: **Neoperl GmbH**, Mullheim (DE)

(72) Inventor: **Werner Kury**, Mullheim (DE)

(73) Assignee: **Neoperl GmbH**, Müllheim (DE)

(**) Term: **14 Years**

(21) Appl. No.: **29/520,358**

(22) Filed: **Mar. 13, 2015**

Related U.S. Application Data

(63) Continuation of application No. 29/495,755, filed on Jul. 3, 2014, now Pat. No. Des. 728,356, which is a continuation of application No. 29/481,364, filed on Feb. 5, 2014, now Pat. No. Des. 713,715.

(30) **Foreign Application Priority Data**

Aug. 8, 2013 (EP) 002288670-0001

(51) **LOC (10) Cl.** **08-08**

(52) **U.S. Cl.**
USPC **D8/397**

(58) **Field of Classification Search**
USPC D8/397, 394, 382, 349, 312, 107, 399; D11/222; D2/869
CPC F16L 19/0206; B60B 3/16; F16B 39/26; F16B 39/24; F16B 37/02; F16B 31/02; H01R 9/0524
See application file for complete search history.

(56) **References Cited**

U.S. PATENT DOCUMENTS

1,029,775	A		6/1912	Tobin	
2,552,794	A		5/1951	Kimbell	
2,727,551	A		12/1955	Rees	
3,702,628	A		11/1972	Cosenza	
D233,652	S	*	11/1974	Wing	D8/397
3,915,534	A	*	10/1975	Yonkers	H01H 9/085 174/71 R
4,019,550	A		4/1977	DeHaitre	
D311,131	S		10/1990	Saito	
D372,765	S		8/1996	Sisk	
D383,053	S		9/1997	Schrader et al.	
D383,378	S		9/1997	Schrader et al.	
6,071,052	A		6/2000	Kerr	
D446,111	S		8/2001	Hussaini	
D446,298	S		8/2001	Thurman	
D459,207	S		6/2002	Miyata	
D487,562	S	*	3/2004	Campbell	D8/397
D514,671	S		2/2006	Jones	
D535,259	S	*	1/2007	Rodrigues	D13/133
D551,972	S	*	10/2007	Jacobs	D9/445
D581,777	S		12/2008	Huang	
D590,243	S	*	4/2009	Bush	D8/397
D590,902	S		4/2009	De La Cruz et al.	
D601,507	S		10/2009	Rodrigues	
D637,697	S		5/2011	Steiner	
D648,836	S		11/2011	Drenth	

(Continued)

Primary Examiner — Cynthia Underwood
(74) *Attorney, Agent, or Firm* — Volpe & Koenig, P.C.

(57) **CLAIM**

The ornamental design for a coupling nut, as shown and described.

DESCRIPTION

FIG. **1** is a top plan view of a coupling nut in accordance with my design;
FIG. **2** is a top, front, left perspective view thereof;
FIG. **3** is a bottom view thereof;
FIG. **4** is a bottom, right, rear perspective view thereof;
FIG. **5** is a front elevational view thereof, with the rear elevational view being identical thereto; and,
FIG. **6** is a right side elevational view thereof, with the left side elevational view being identical thereto.
The broken lines represent portions of the structure that form no part of the claimed design.

1 Claim, 6 Drawing Sheets

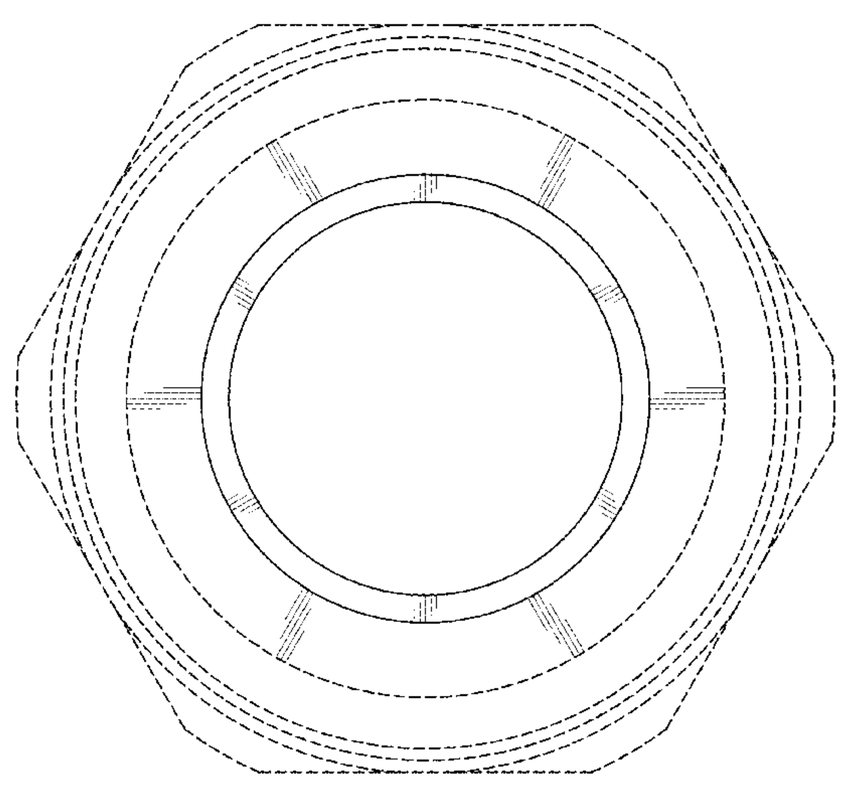

(56) **References Cited**

U.S. PATENT DOCUMENTS

8,210,783	B2	7/2012	Morrison	
D678,967	S	3/2013	Fossum et al.	
D679,988	S	4/2013	Yamazaki	
D687,702	S	8/2013	Yates	
D698,638	S	2/2014	Imai et al.	
D699,558	S *	2/2014	Smith	D8/397
D700,682	S	3/2014	Bayyouk et al.	
8,740,464	B2	6/2014	Berns	
D718,121	S	11/2014	Yu	
2003/0039527	A1 *	2/2003	Schatz	F16B 31/02 411/9
2005/0136735	A1 *	6/2005	Rodrigues	H01R 9/0524 439/578
2005/0199426	A1	9/2005	Smith et al.	

* cited by examiner

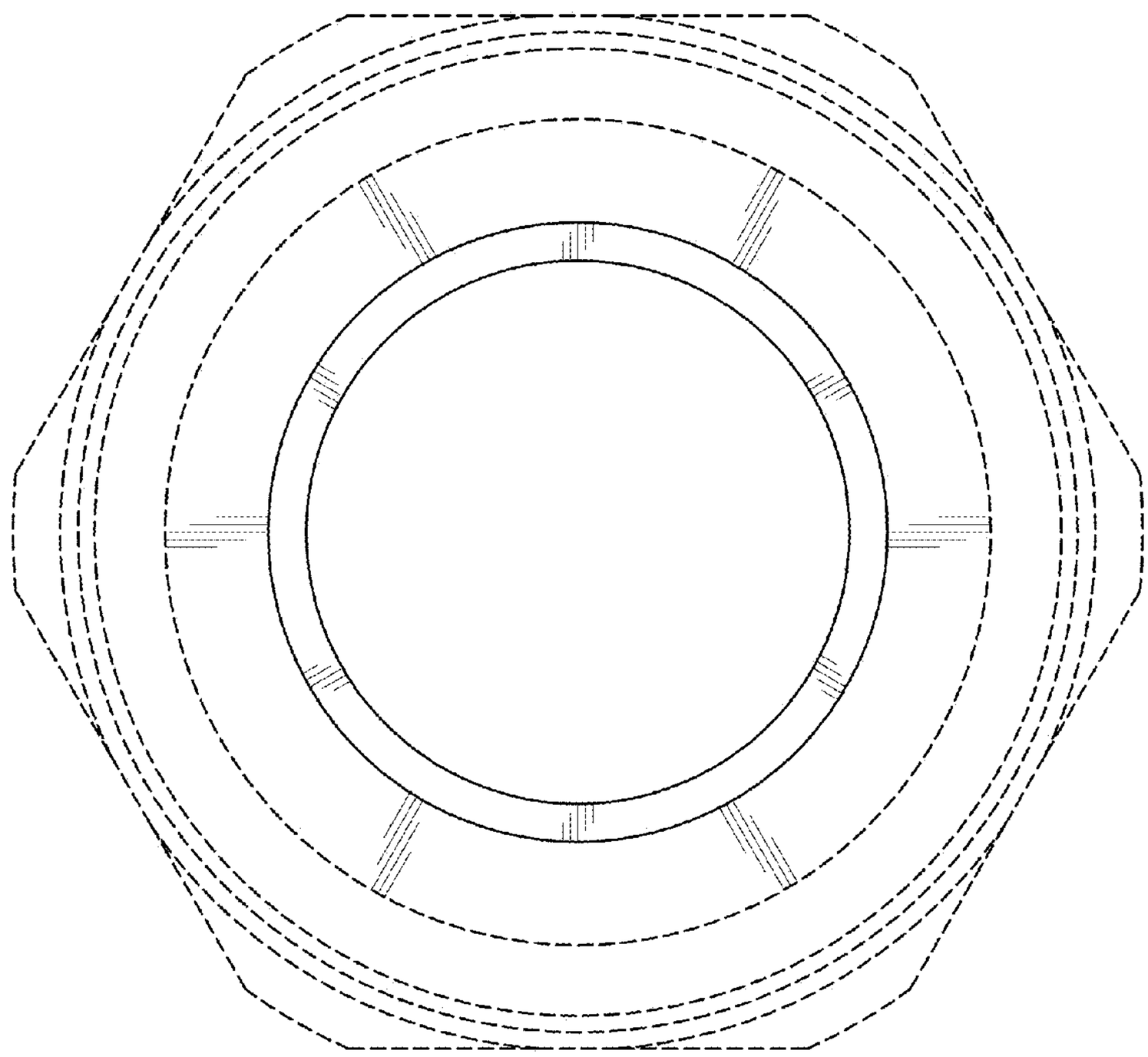

Fig. 1

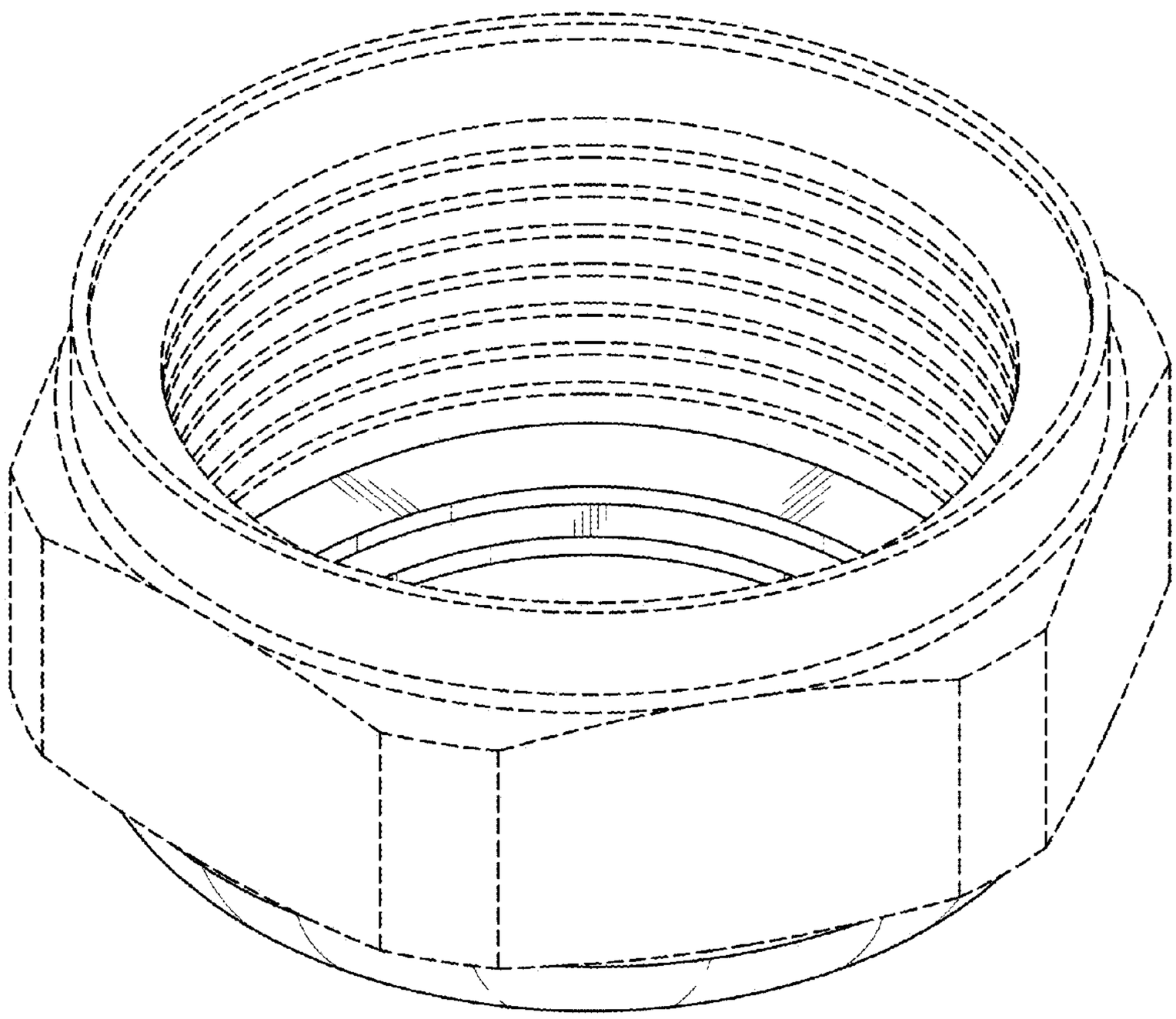

Fig. 2

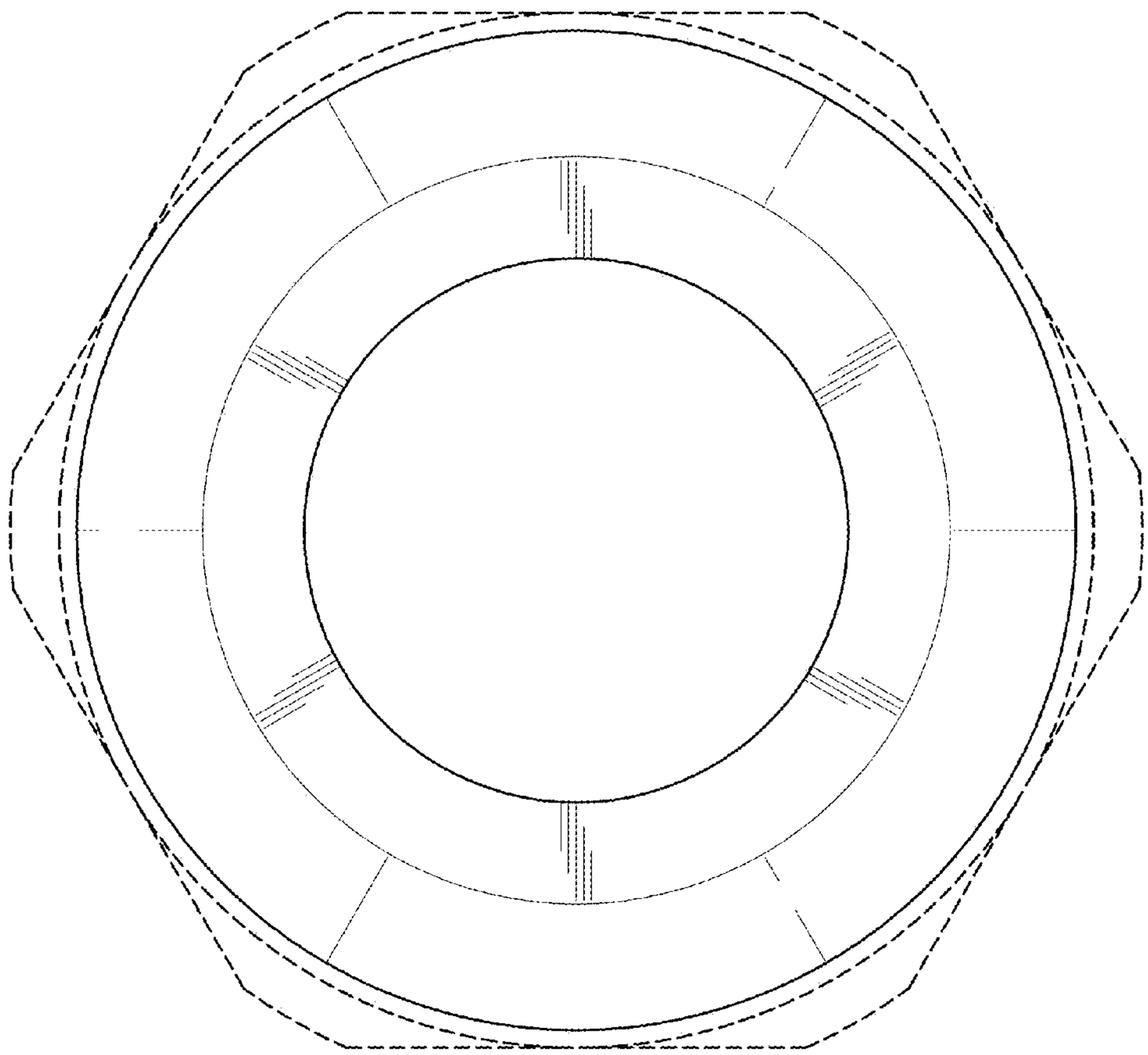

Fig. 3

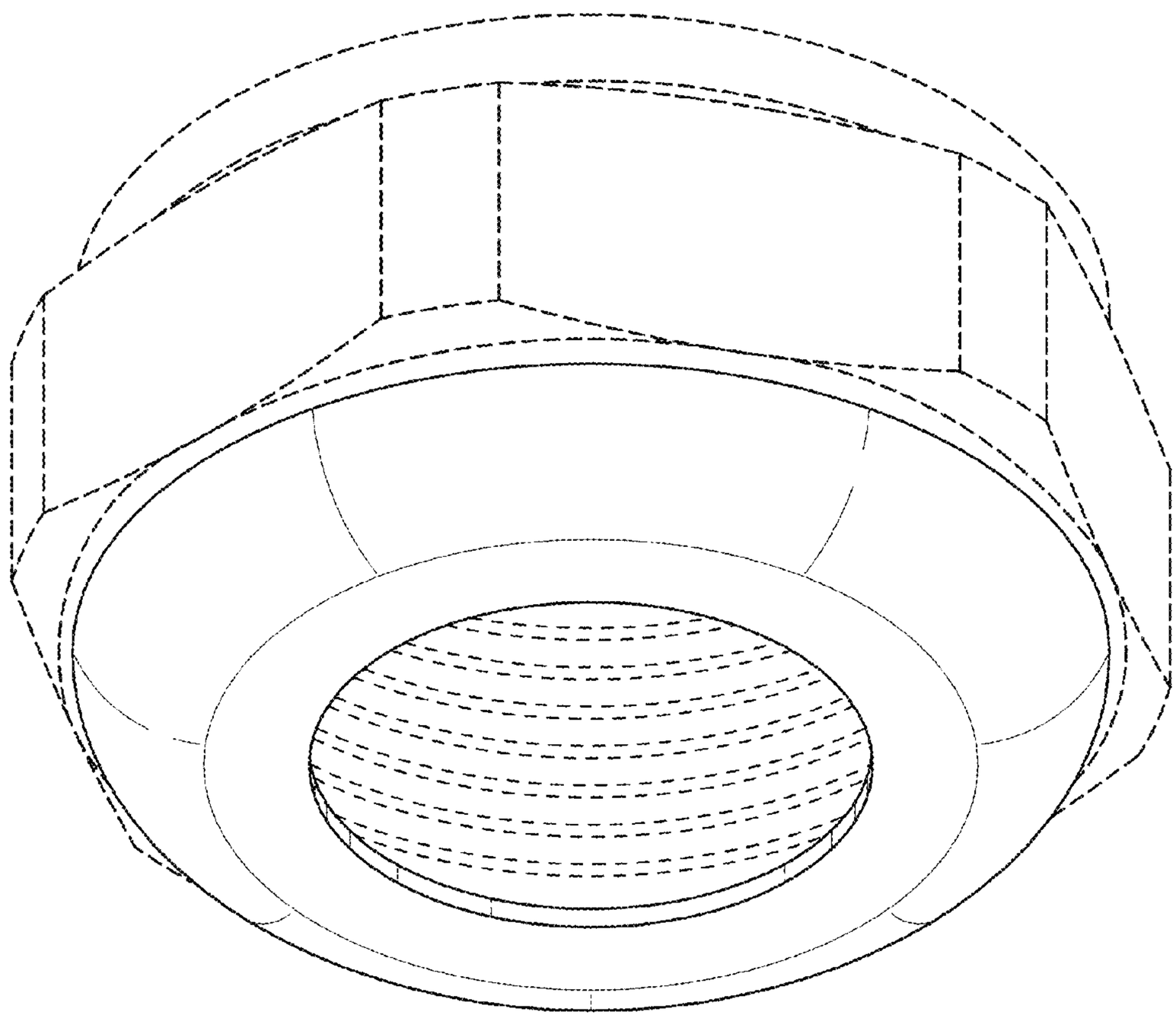

Fig. 4

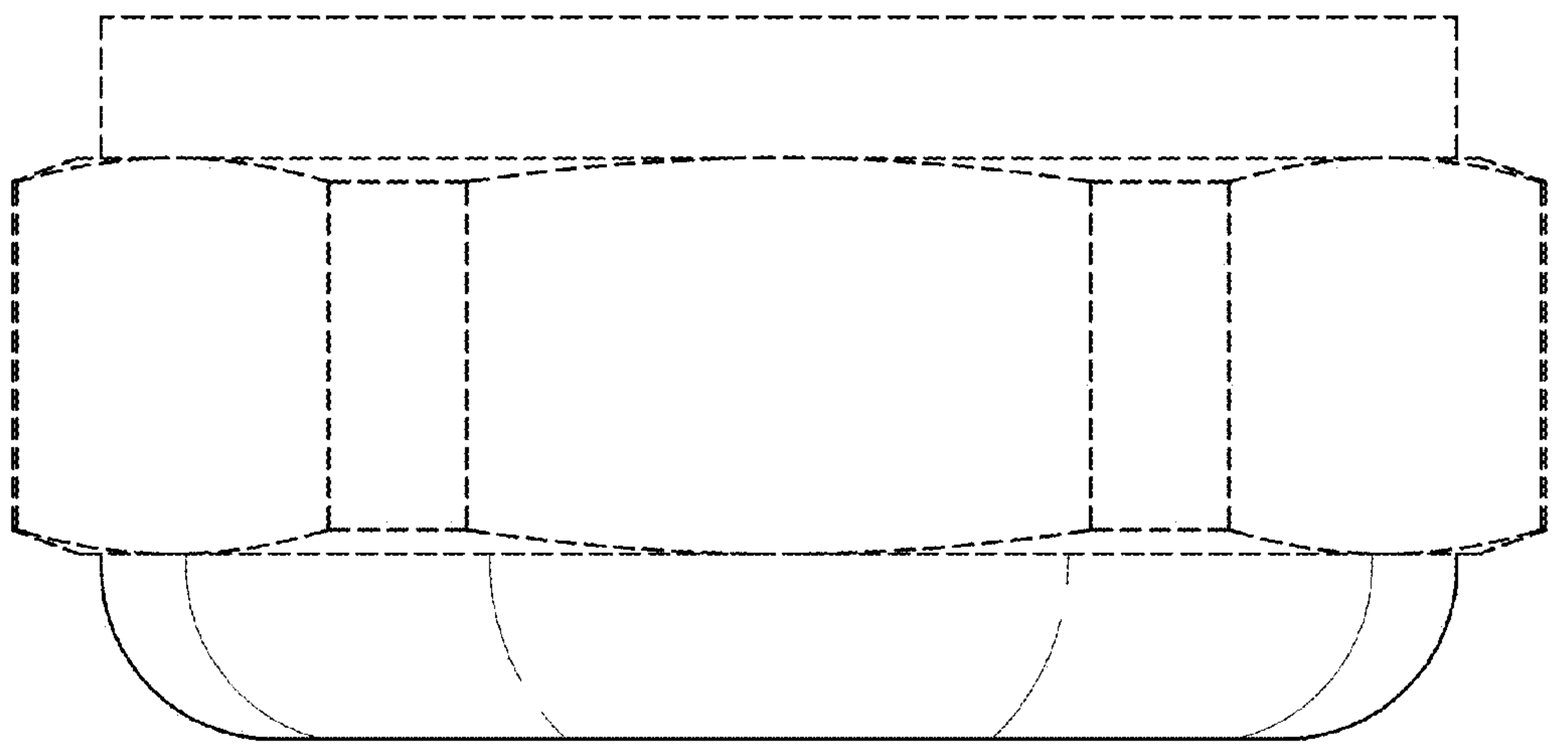

Fig. 5

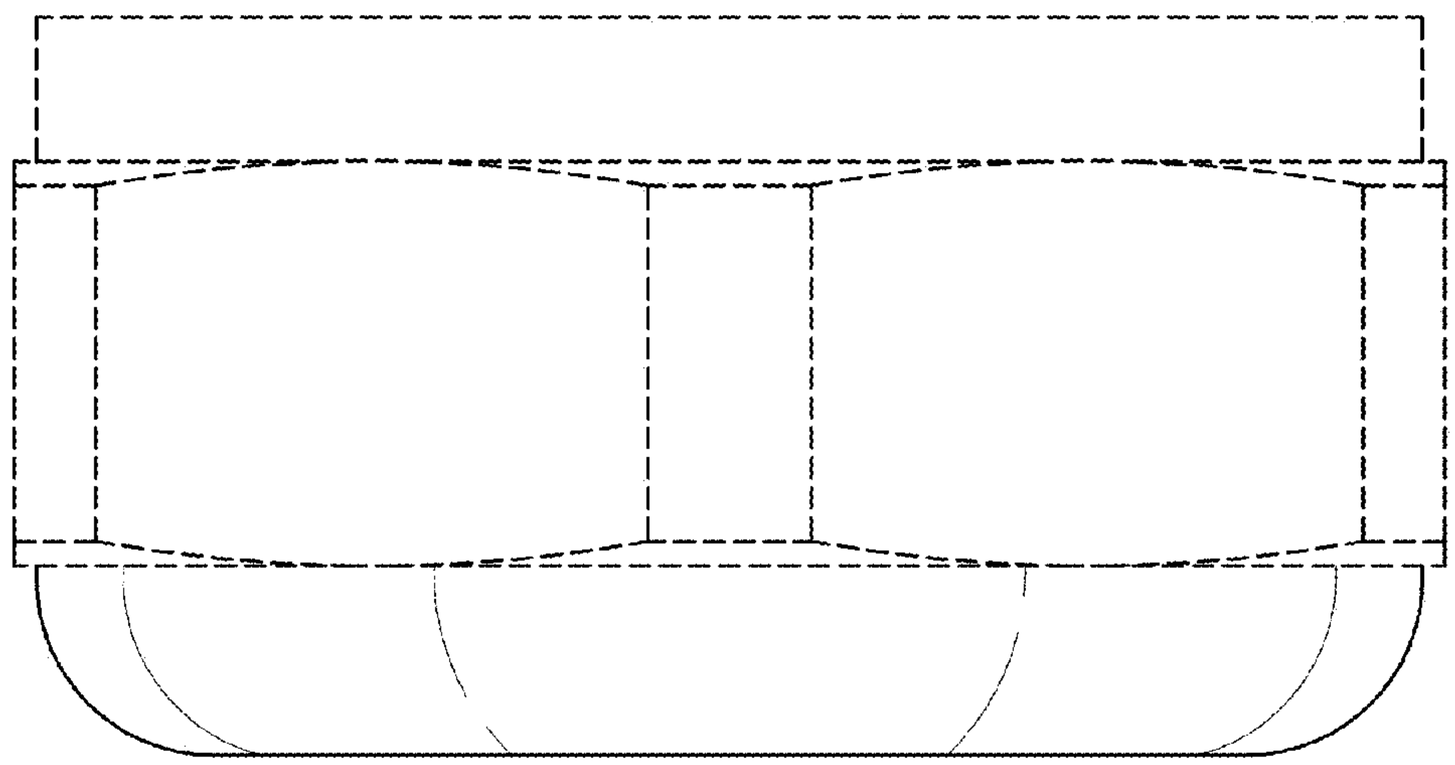

Fig. 6