US00D747295S

(12) United States Design Patent

Eastwood et al.

(10) Patent No.: US D747,295 S
(45) Date of Patent: ** Jan. 12, 2016

(54) **IN-EAR HEADPHONE**

(71) Applicant: **Intel Corporation**, Santa Clara, CA (US)

(72) Inventors: **Mark Eastwood**, Kentfield, CA (US); **Hans Moritz**, Novato, CA (US)

(73) Assignee: **Intel Corporation**, Santa Clara, CA (US)

(**) Term: **14 Years**

(21) Appl. No.: **29/512,975**

(22) Filed: **Dec. 23, 2014**

(51) **LOC (10) Cl.** **14-01**

(52) **U.S. Cl.**
USPC **D14/223**

(58) **Field of Classification Search**
USPC D14/223, 205; 181/129, 130, 135; 379/430, 431; 381/380, 381
CPC H04R 1/10
See application file for complete search history.

(56) **References Cited**

U.S. PATENT DOCUMENTS

5,295,193	A	*	3/1994	Ono	381/151
6,760,458	B1	*	7/2004	Bogeskov-Jensen et al.	381/370
D510,337	S	*	10/2005	Tages	D14/205
D514,549	S	*	2/2006	Rath et al.	D14/223
D517,054	S	*	3/2006	Yang	D14/223
D539,268	S	*	3/2007	Suzuki	D14/206
D554,109	S	*	10/2007	Ledbetter et al.	D14/223
D556,740	S	*	12/2007	Xavier	D14/223
D561,738	S	*	2/2008	Ikeda et al.	D14/205
7,349,550	B2	*	3/2008	Oliveira et al.	381/380
D566,099	S	*	4/2008	Komiyama	D14/206
D581,395	S	*	11/2008	Sade et al.	D14/205
D604,272	S	*	11/2009	Kitayama	D14/223
D618,211	S	*	6/2010	Oguro et al.	D14/205
D645,457	S	*	9/2011	Carr et al.	D14/223
D653,244	S	*	1/2012	Birger	D14/223
D666,996	S	*	9/2012	Hardi et al.	D14/223
D689,471	S	*	9/2013	Hardi et al.	D14/223
D689,848	S	*	9/2013	Lee et al.	D14/223
D694,220	S	*	11/2013	Lee et al.	D14/223
D711,858	S	*	8/2014	Yang	D14/223
D714,260	S	*	9/2014	Han	D14/223
D728,533	S	*	5/2015	Poulsen et al.	D14/223
D732,508	S	*	6/2015	Funayama	D14/223
D733,101	S	*	6/2015	Pi et al.	D14/223
D733,689	S	*	7/2015	Narita	D14/223

* cited by examiner

Primary Examiner — Paula Greene
(74) *Attorney, Agent, or Firm* — Patent Capital Group

(57) **CLAIM**

The ornamental design for an in-ear headphone, as shown and described.

DESCRIPTION

FIG. **1** is a first perspective view illustrating a design for an in-ear headphone according to one embodiment;
FIG. **2** is a front view thereof;
FIG. **3** is a back view thereof;
FIG. **4** is a side view thereof;
FIG. **5** is another side view thereof;
FIG. **6** is a top view thereof;
FIG. **7** is a bottom view thereof;
FIG. **8** is a second perspective view thereof;
FIG. **9** is a view illustrating an environment of the in-ear headphone of FIGS. **1-8** positioned partially within an ear of a subject;
FIG. **10** is a first perspective view illustrating a design for an in-ear headphone according to another embodiment;
FIG. **11** is a front view thereof;
FIG. **12** is a back view thereof;
FIG. **13** is a side view thereof;
FIG. **14** is another side view thereof;
FIG. **15** is a top view thereof;
FIG. **16** is a bottom view thereof;
FIG. **17** is a second perspective view thereof; and,
FIG. **18** is a view illustrating an environment of the in-ear headphone of FIGS. **10-17** positioned partially within an ear of a subject.

The broken lines and the unshaded regions bounded by broken lines of the preceding FIGURES illustrate boundaries for the FIGURES; however, the broken lines and the unshaded regions bounded by broken lines form no part of the claimed design. Non-oblique line shading is meant to show contour and not surface ornamentation.

1 Claim, 18 Drawing Sheets

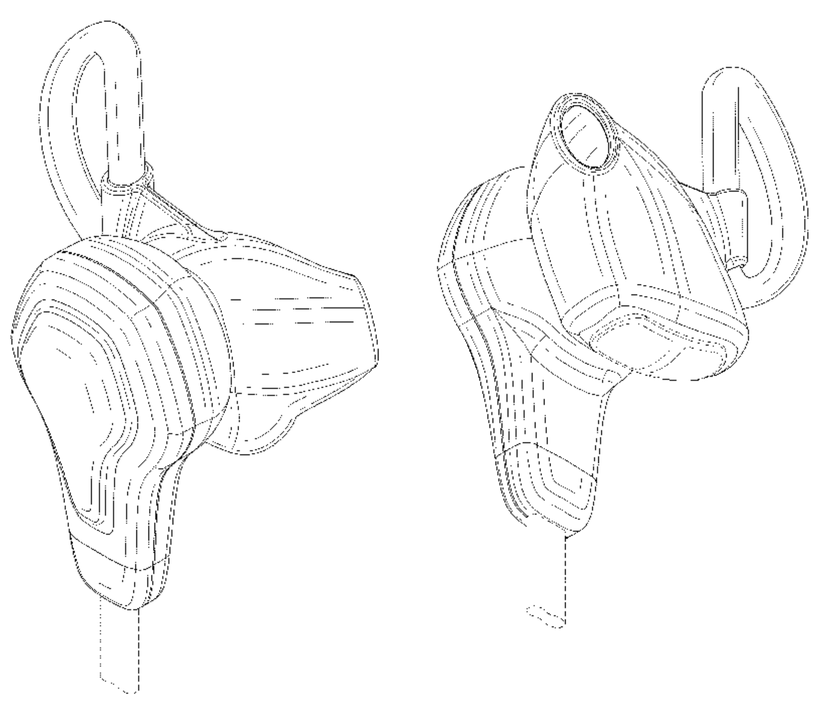

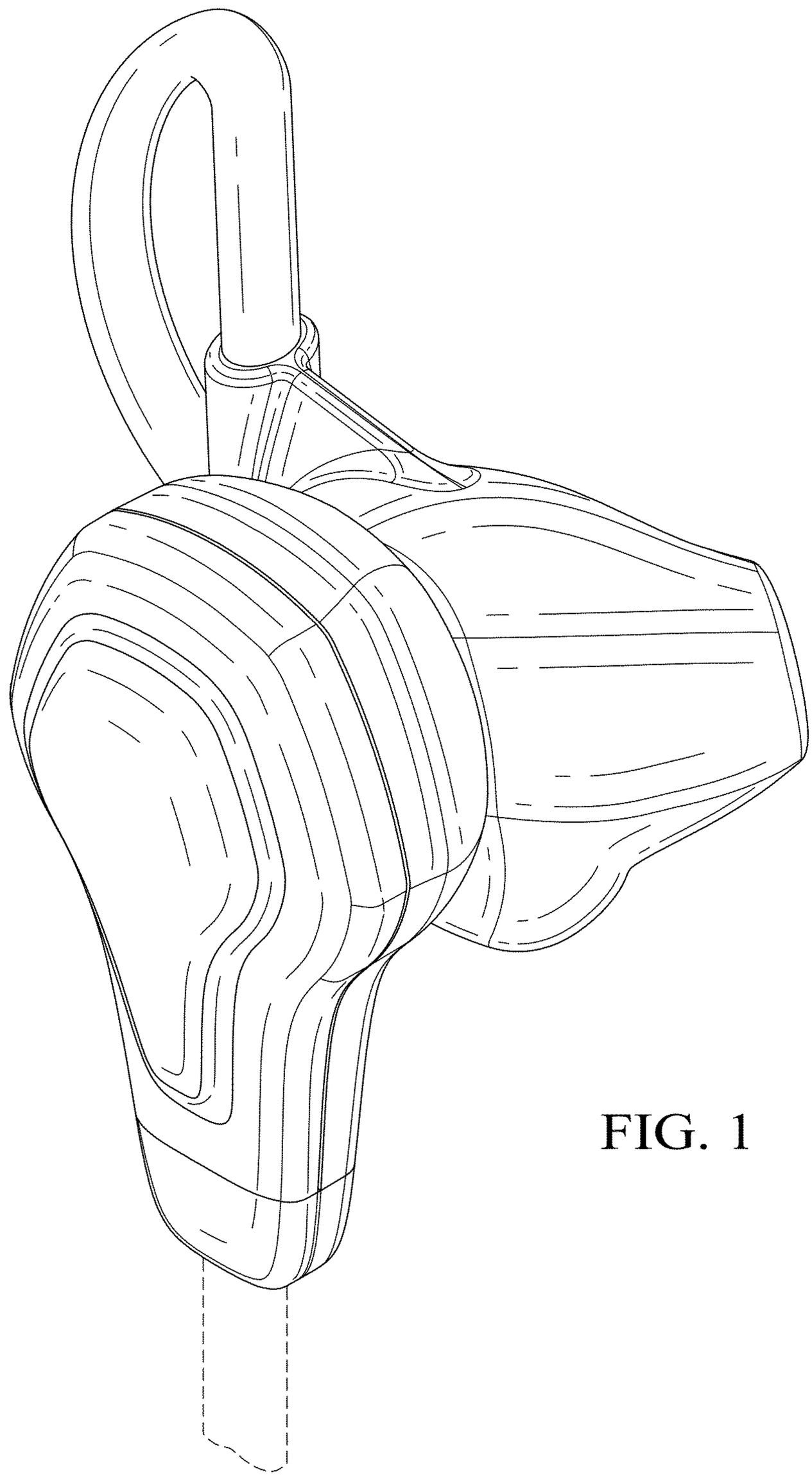

FIG. 1

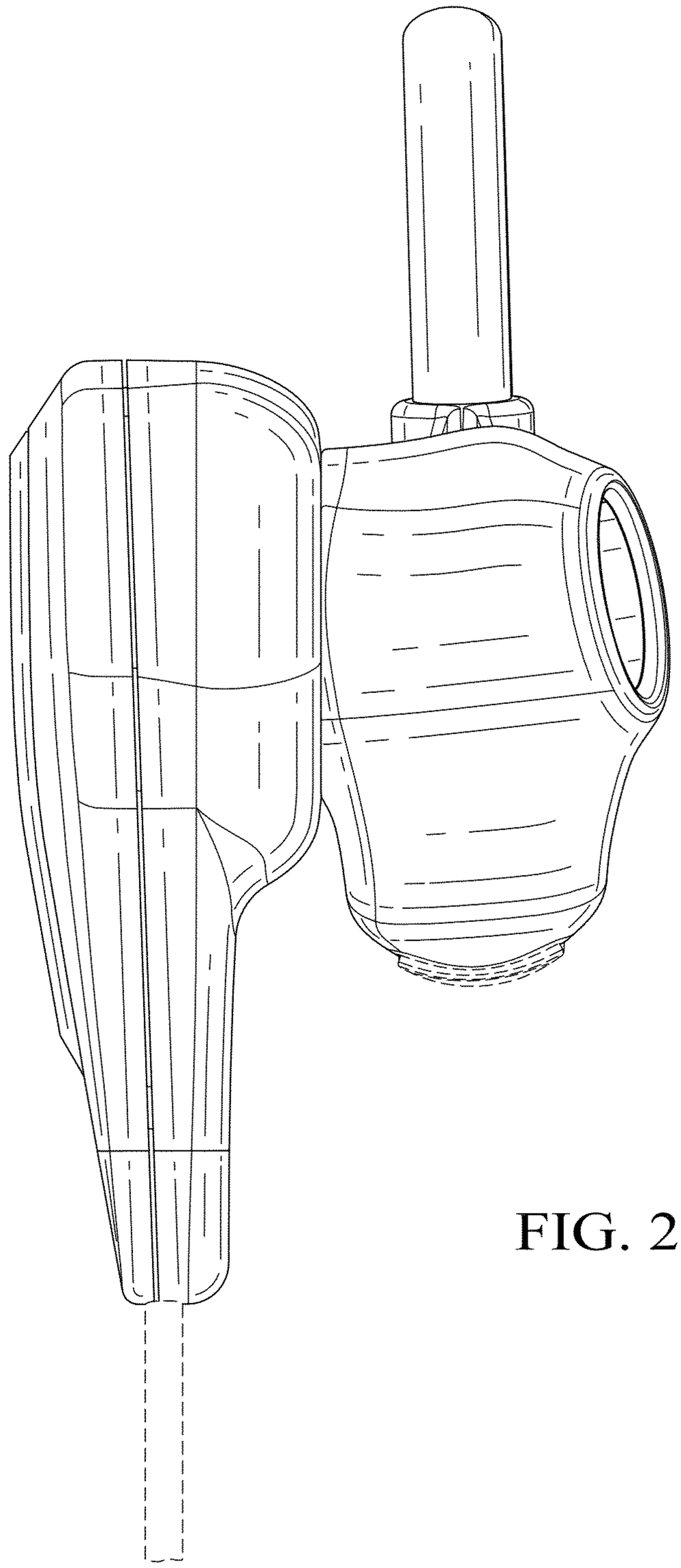

FIG. 2

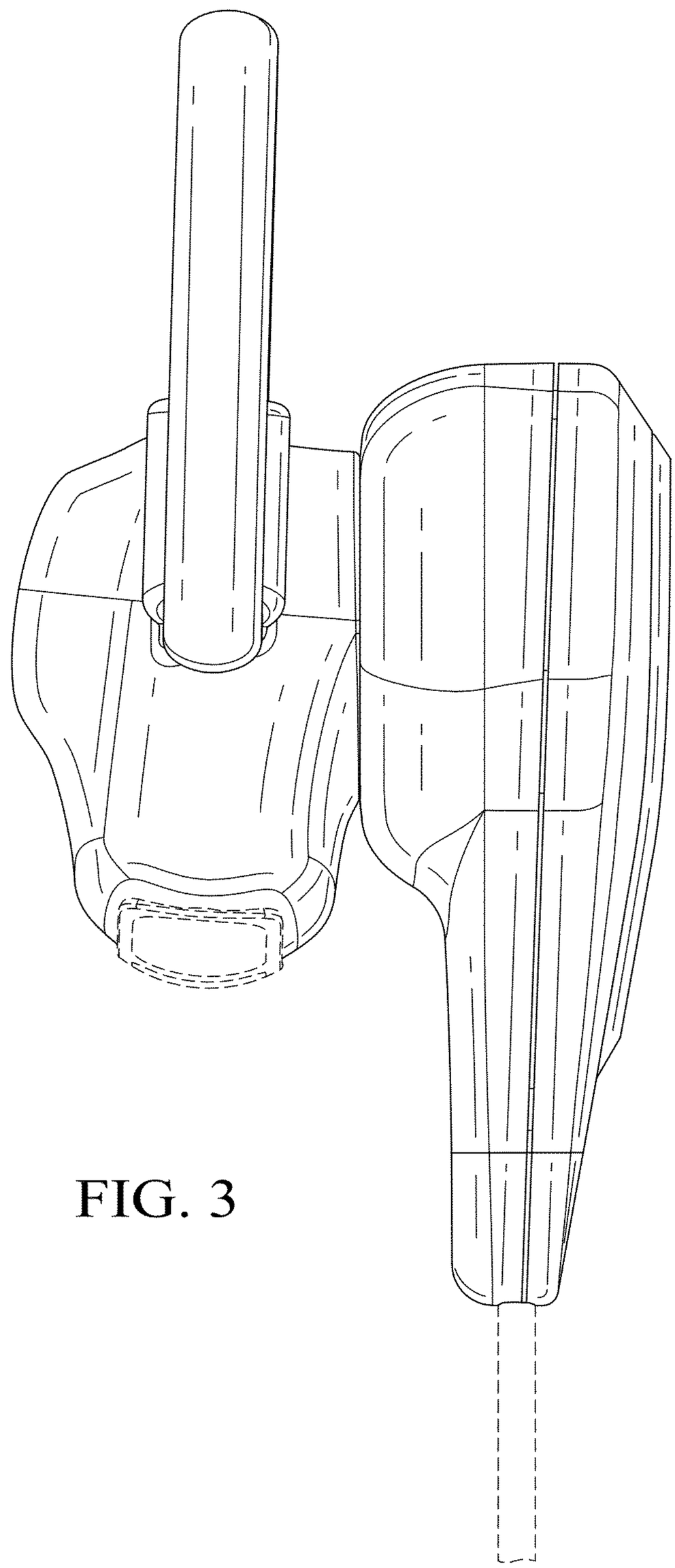

FIG. 3

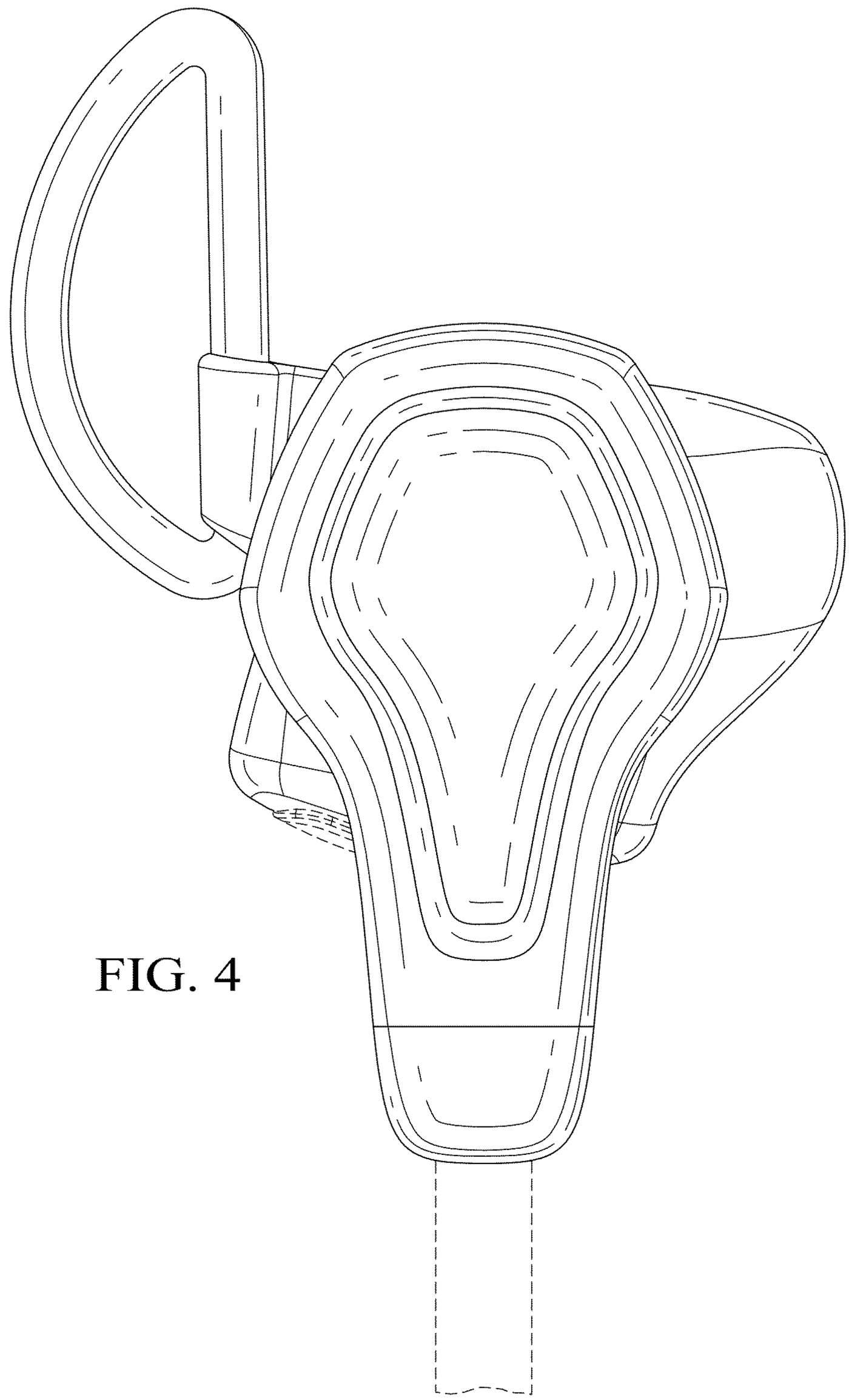

FIG. 4

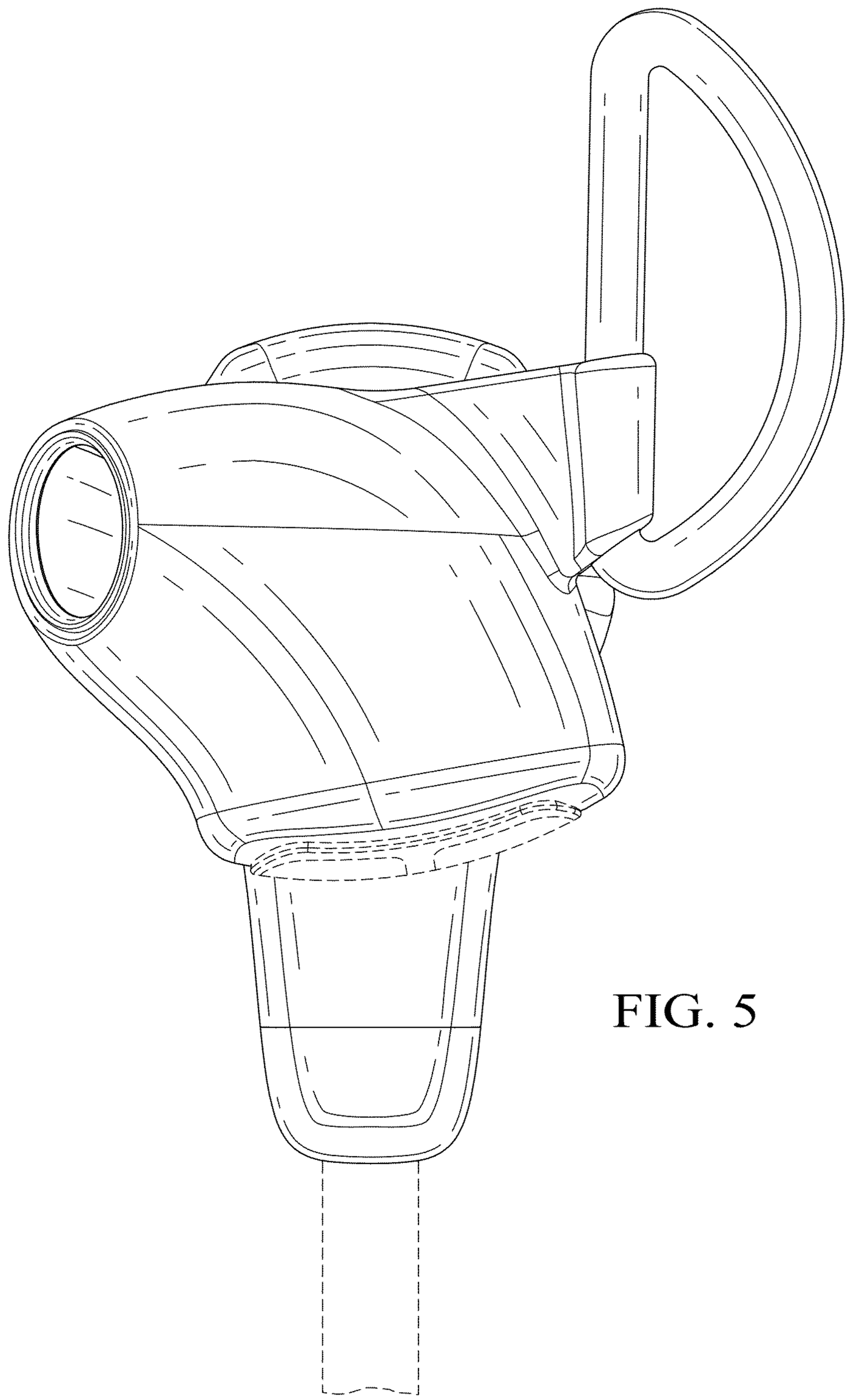

FIG. 5

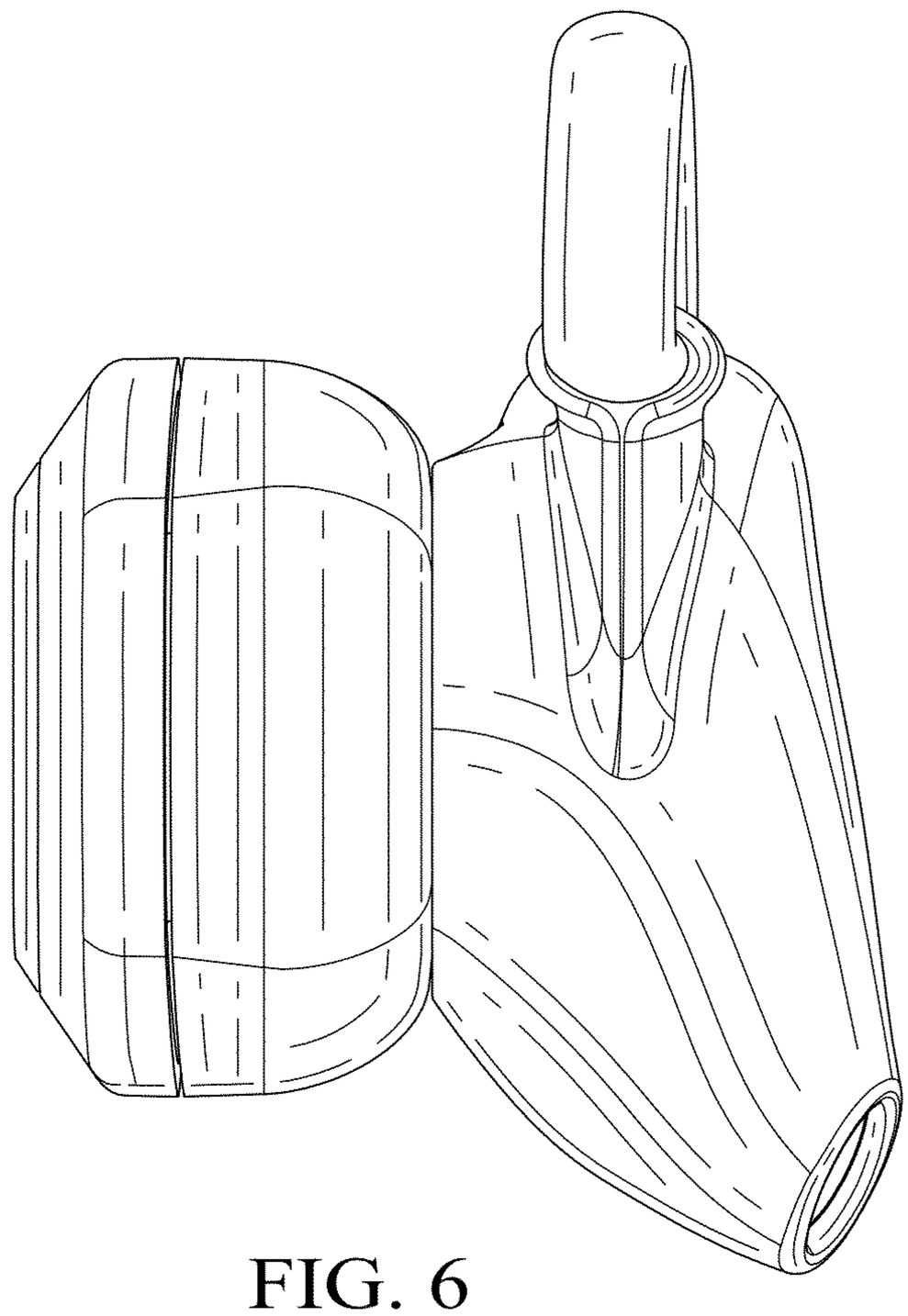

FIG. 6

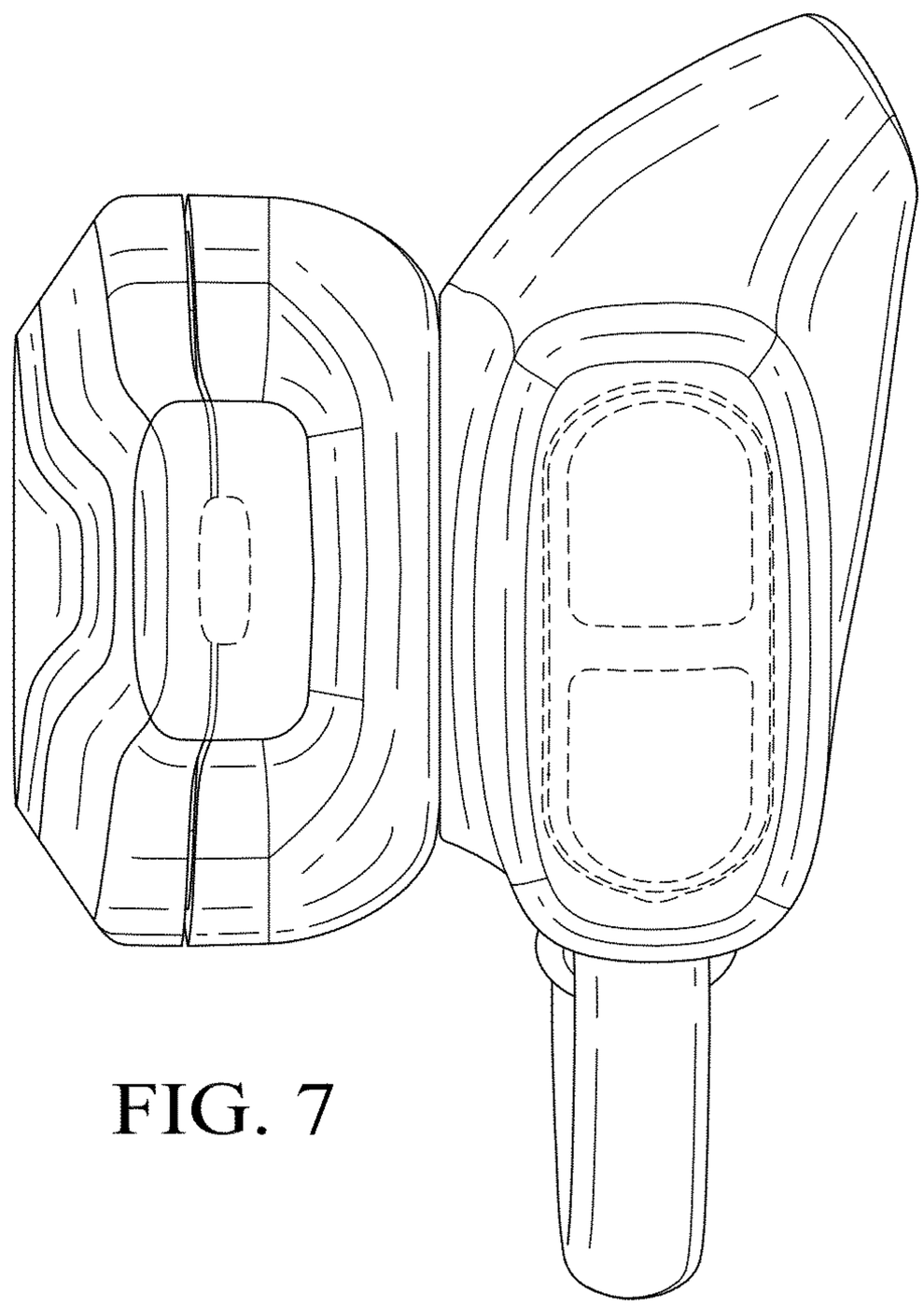

FIG. 7

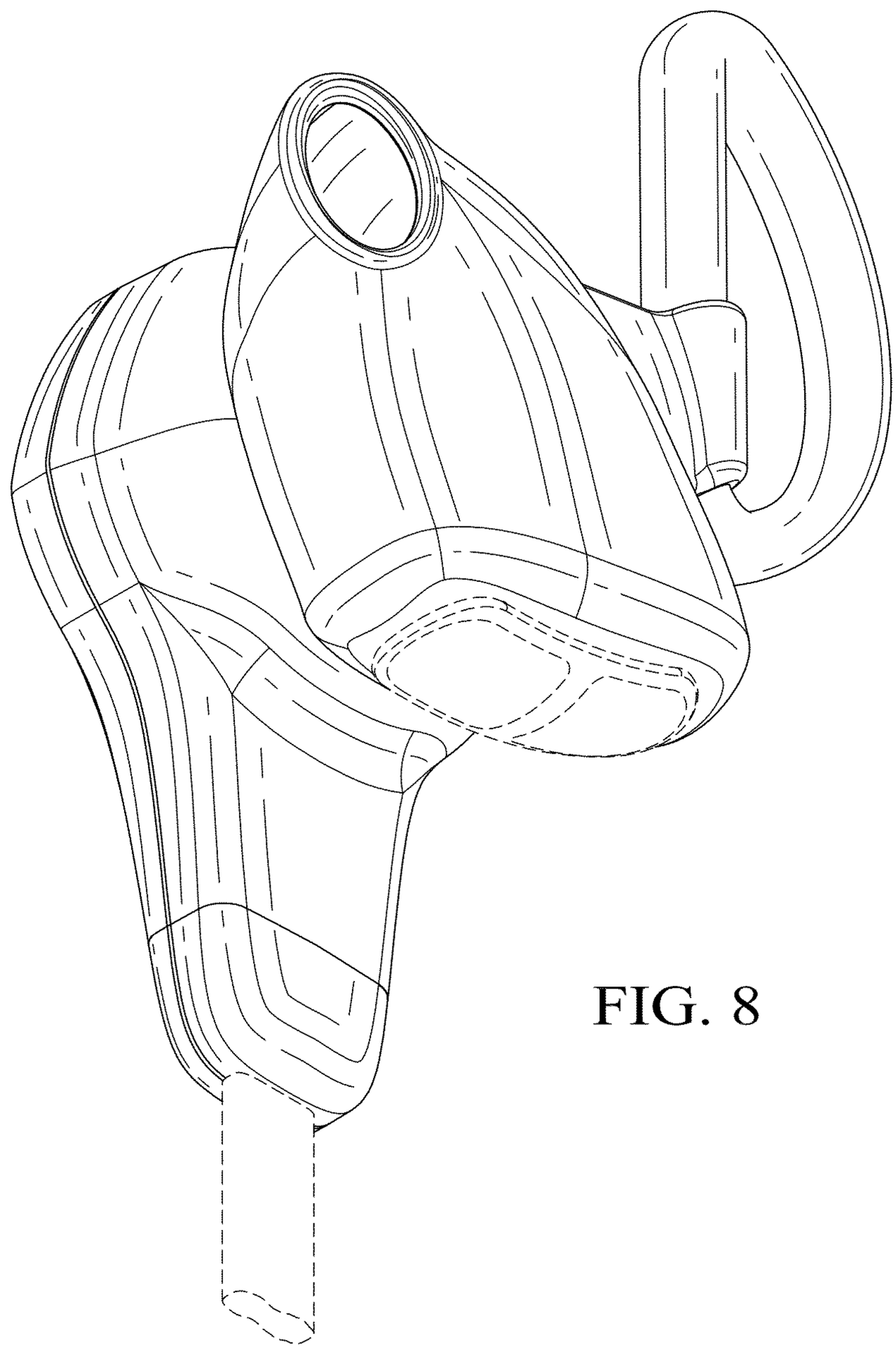

FIG. 8

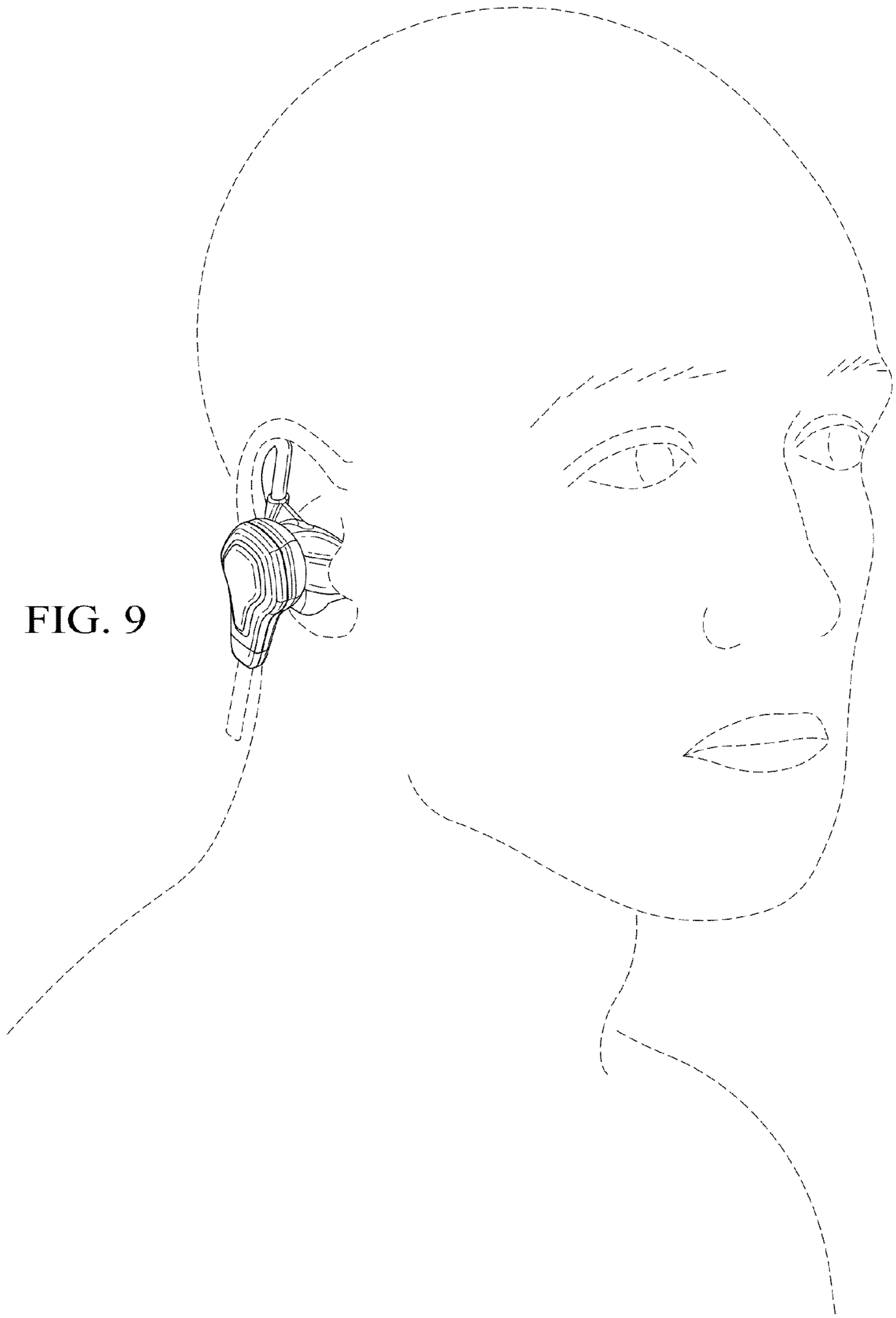

FIG. 9

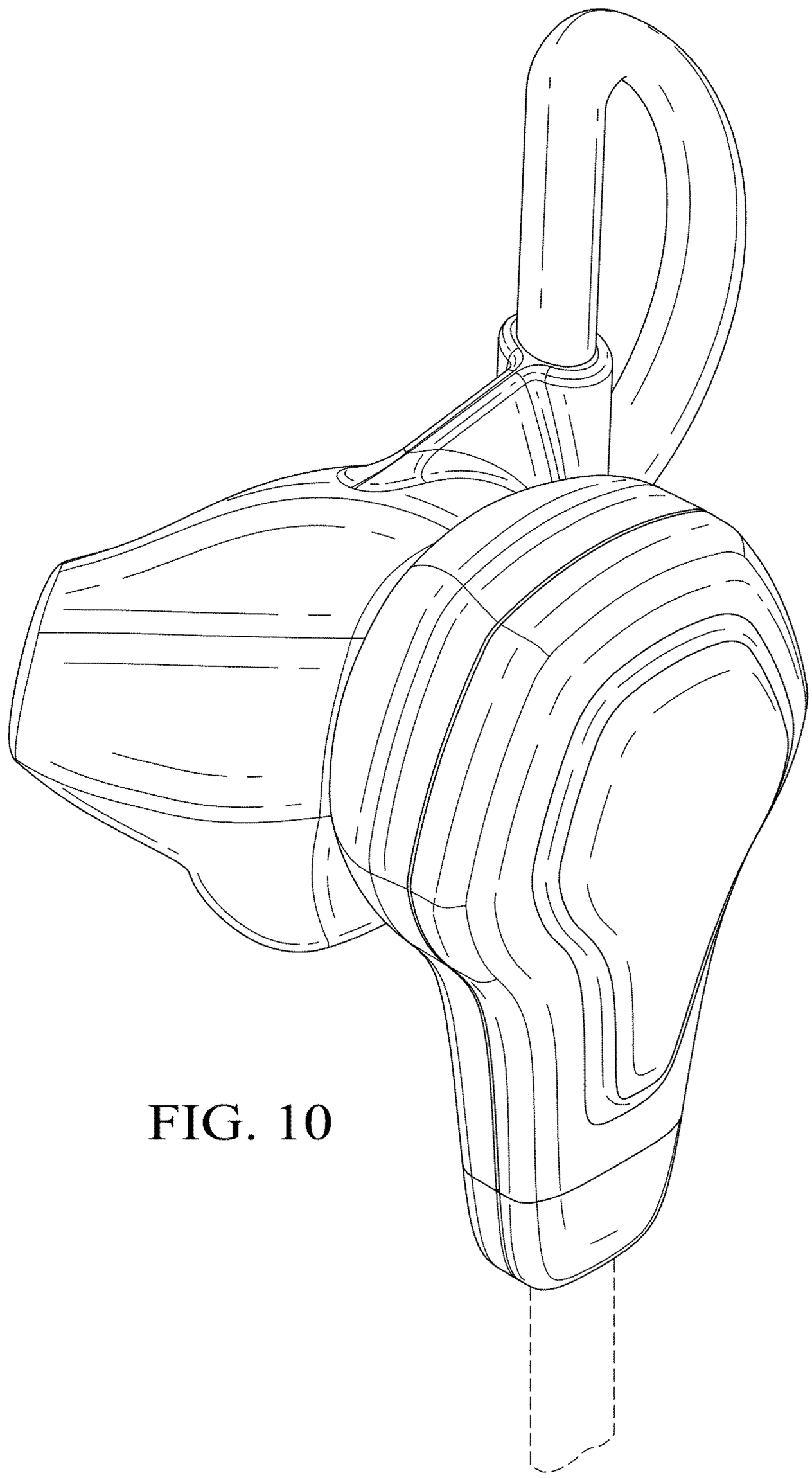

FIG. 10

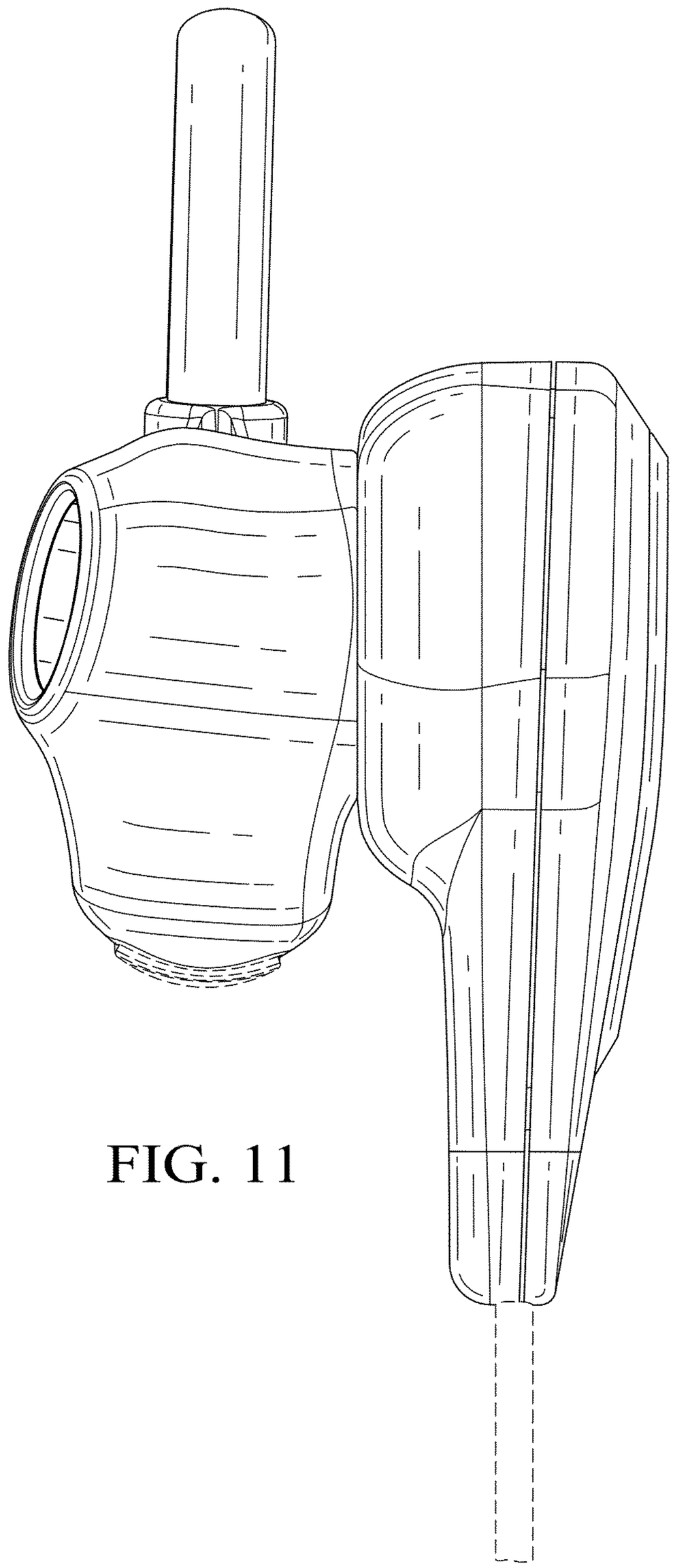

FIG. 11

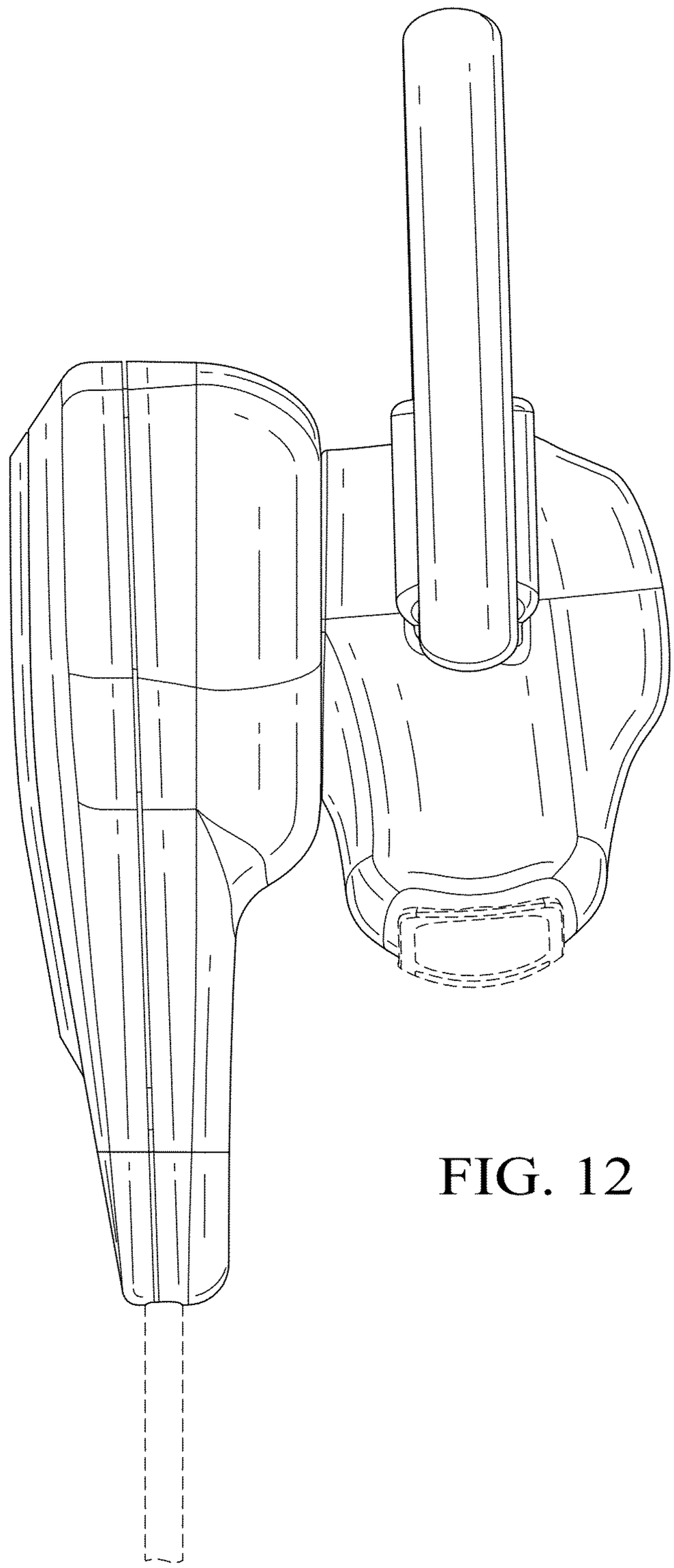

FIG. 12

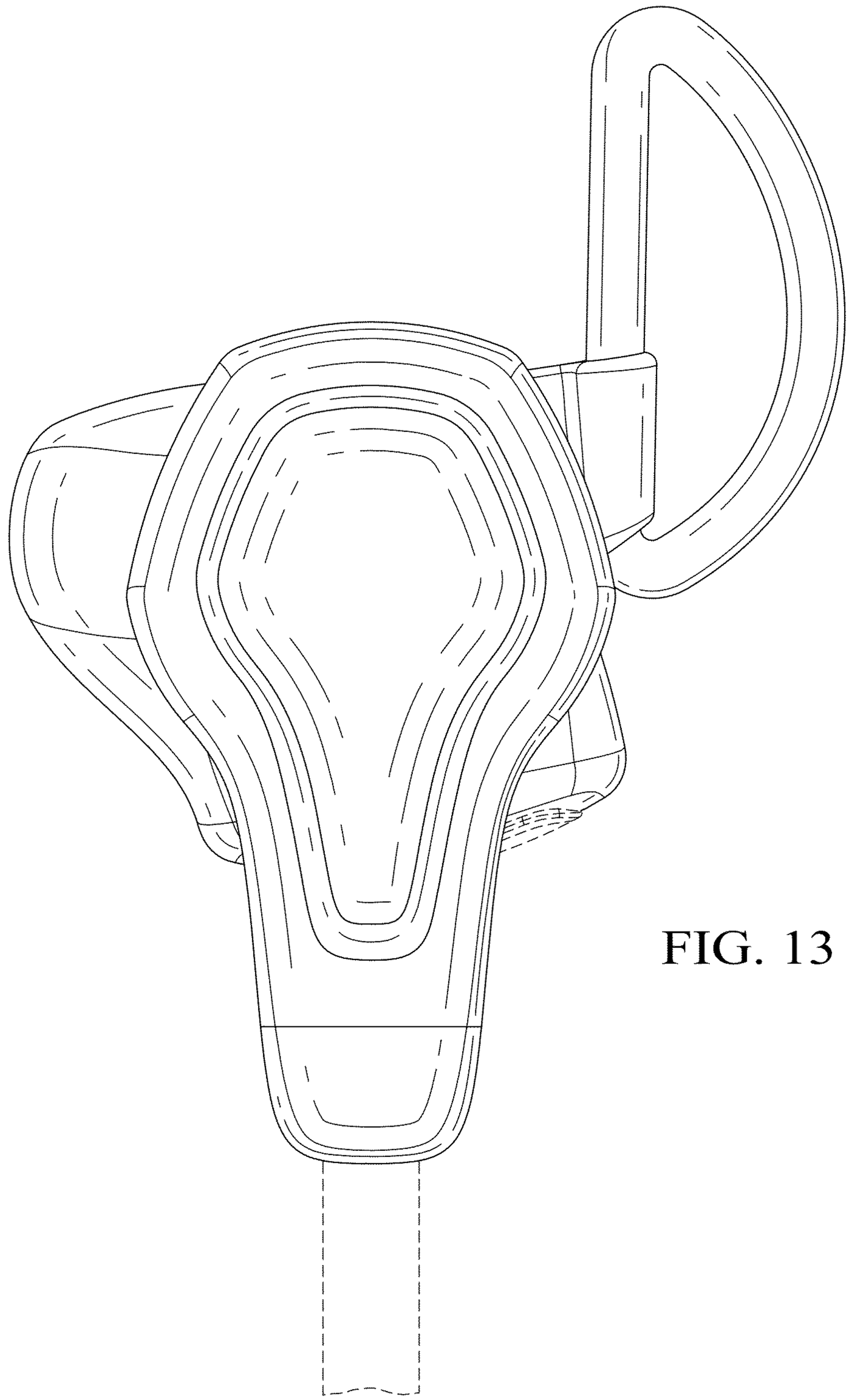

FIG. 13

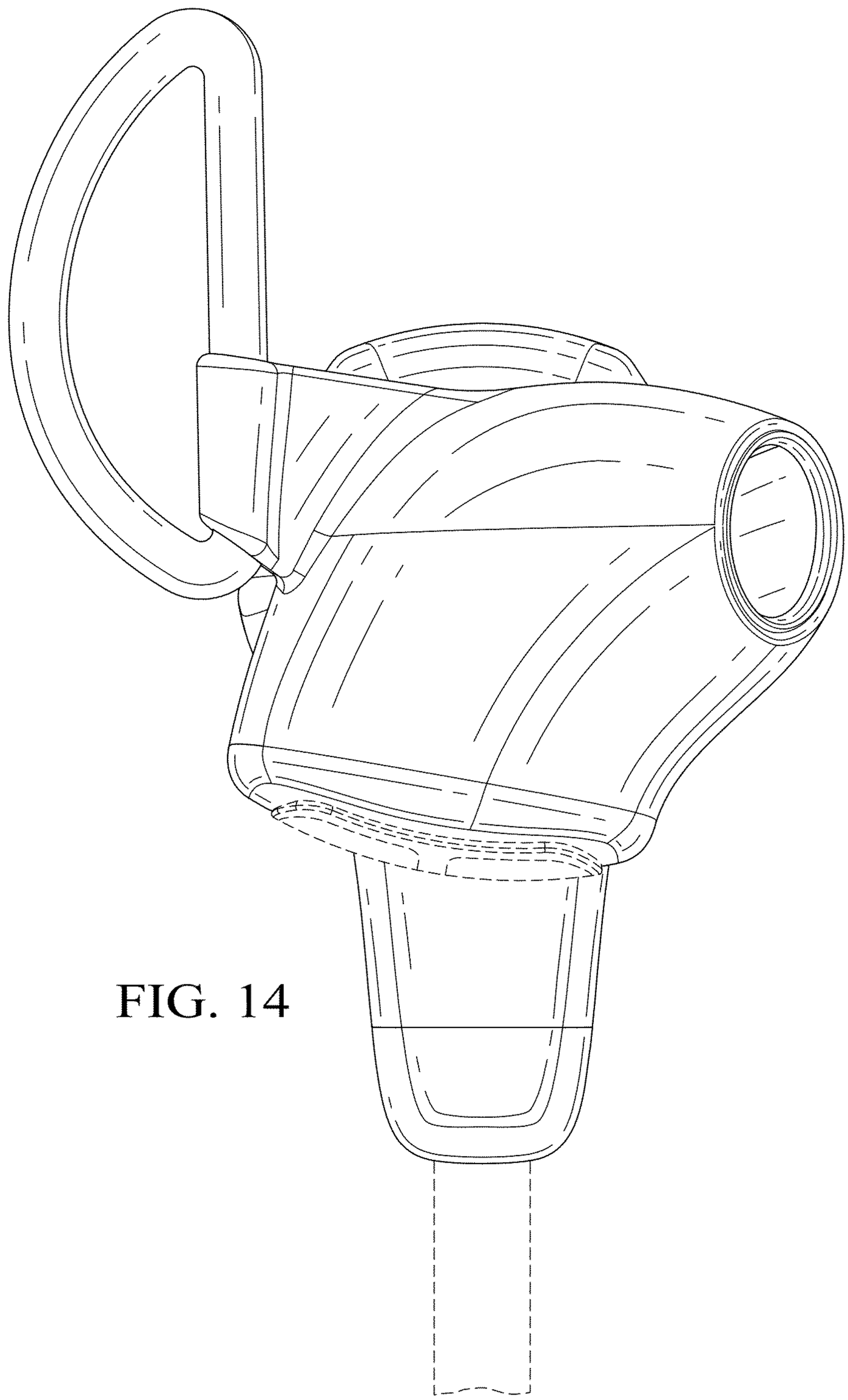

FIG. 14

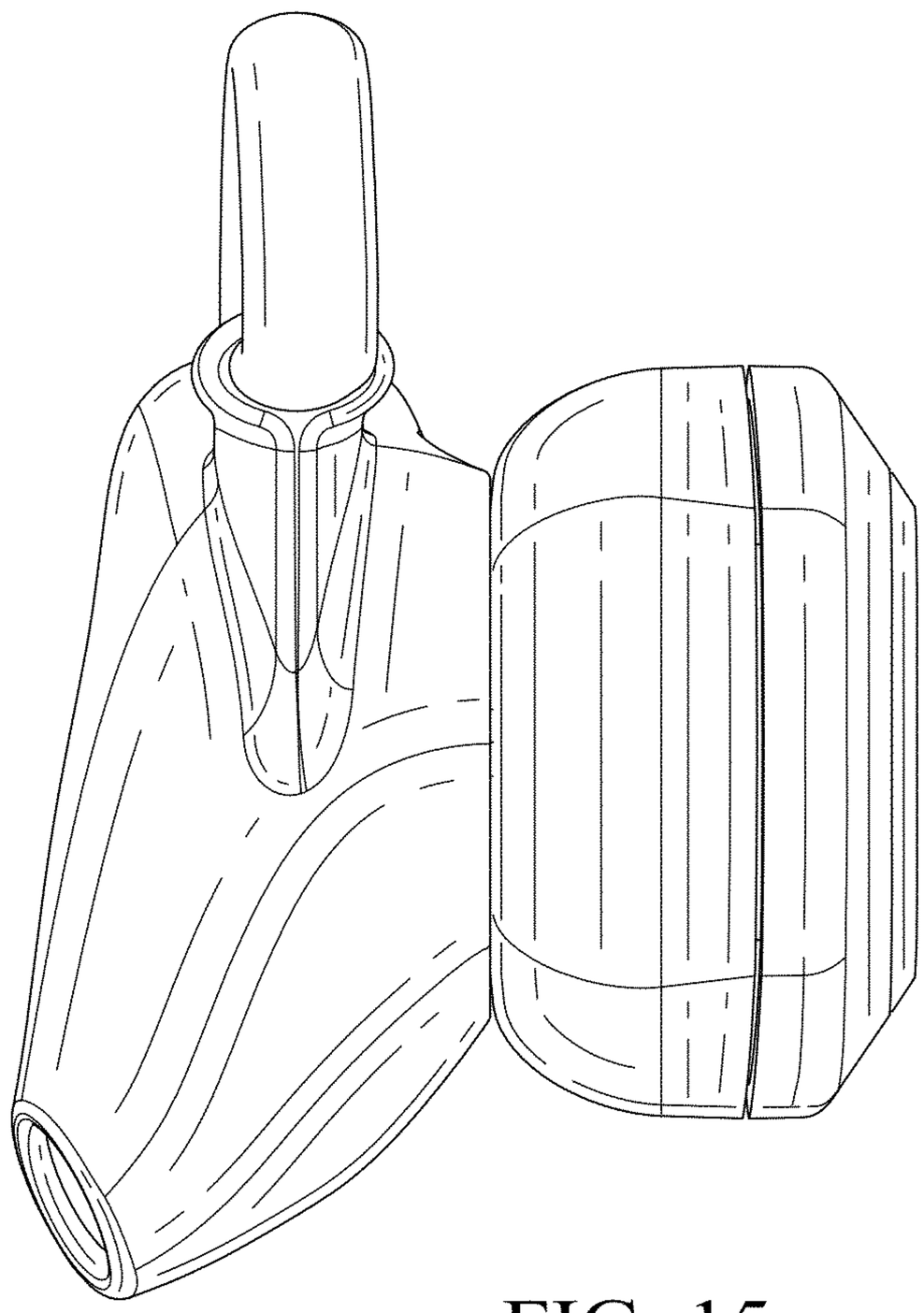

FIG. 15

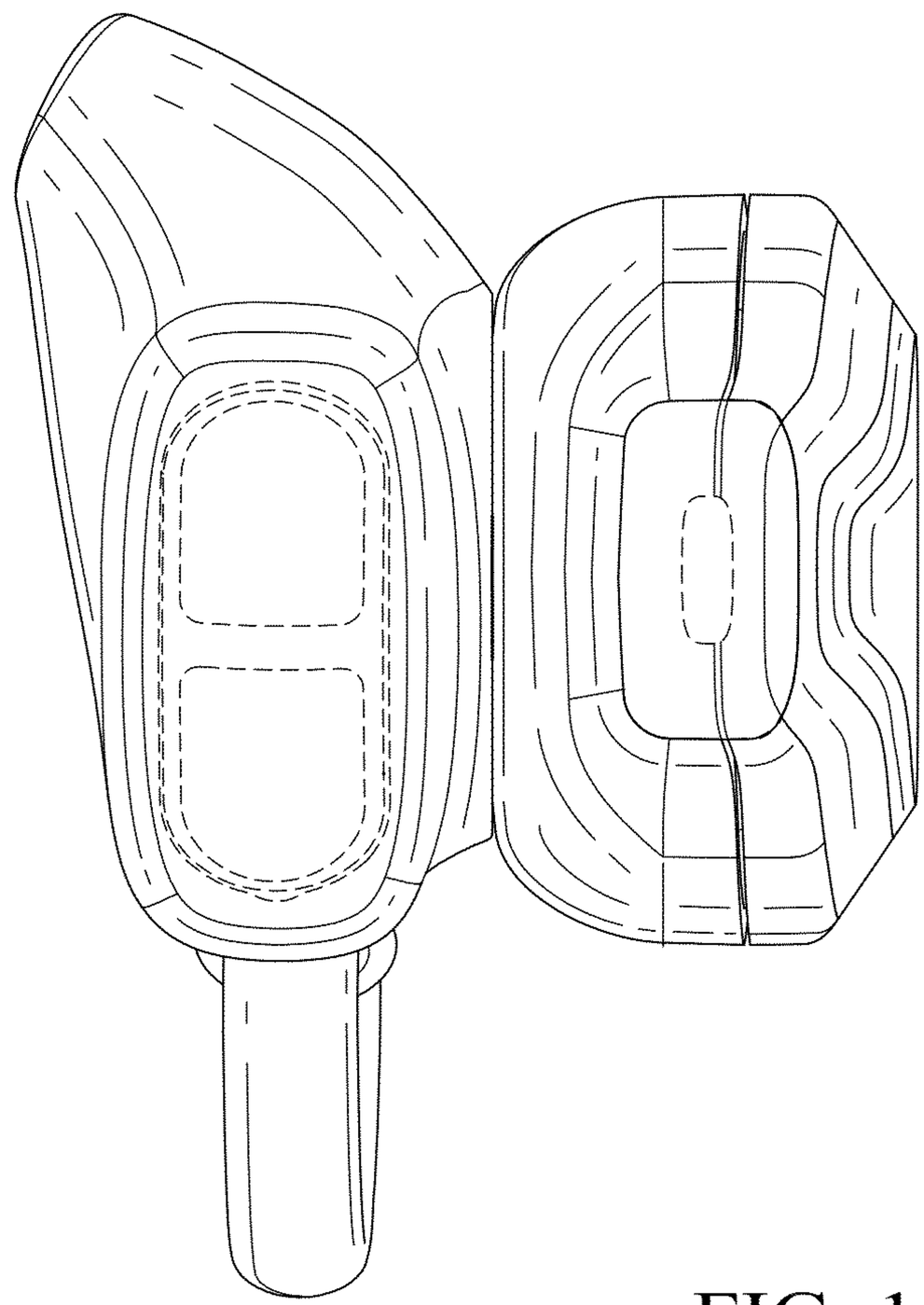

FIG. 16

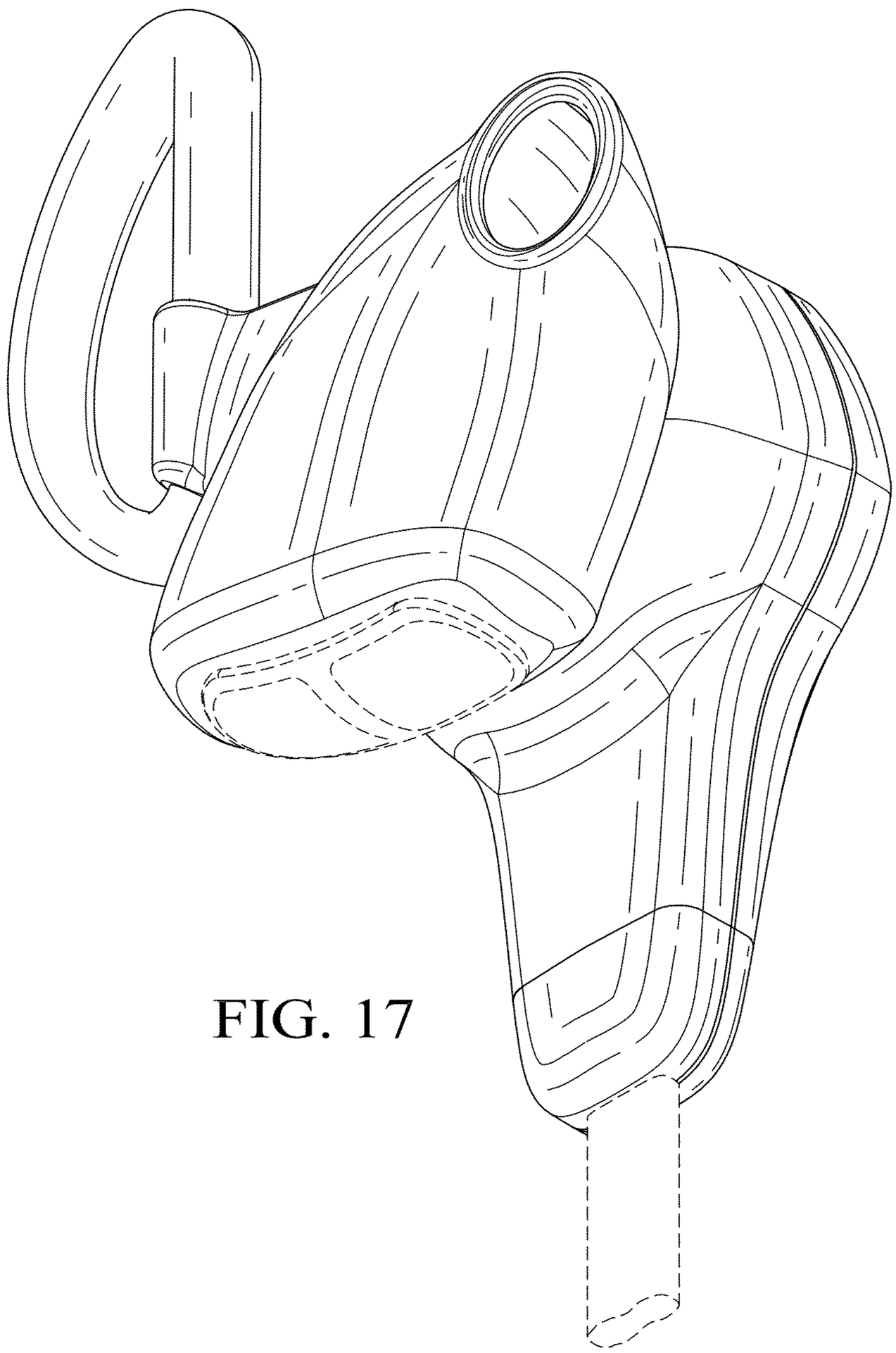

FIG. 17

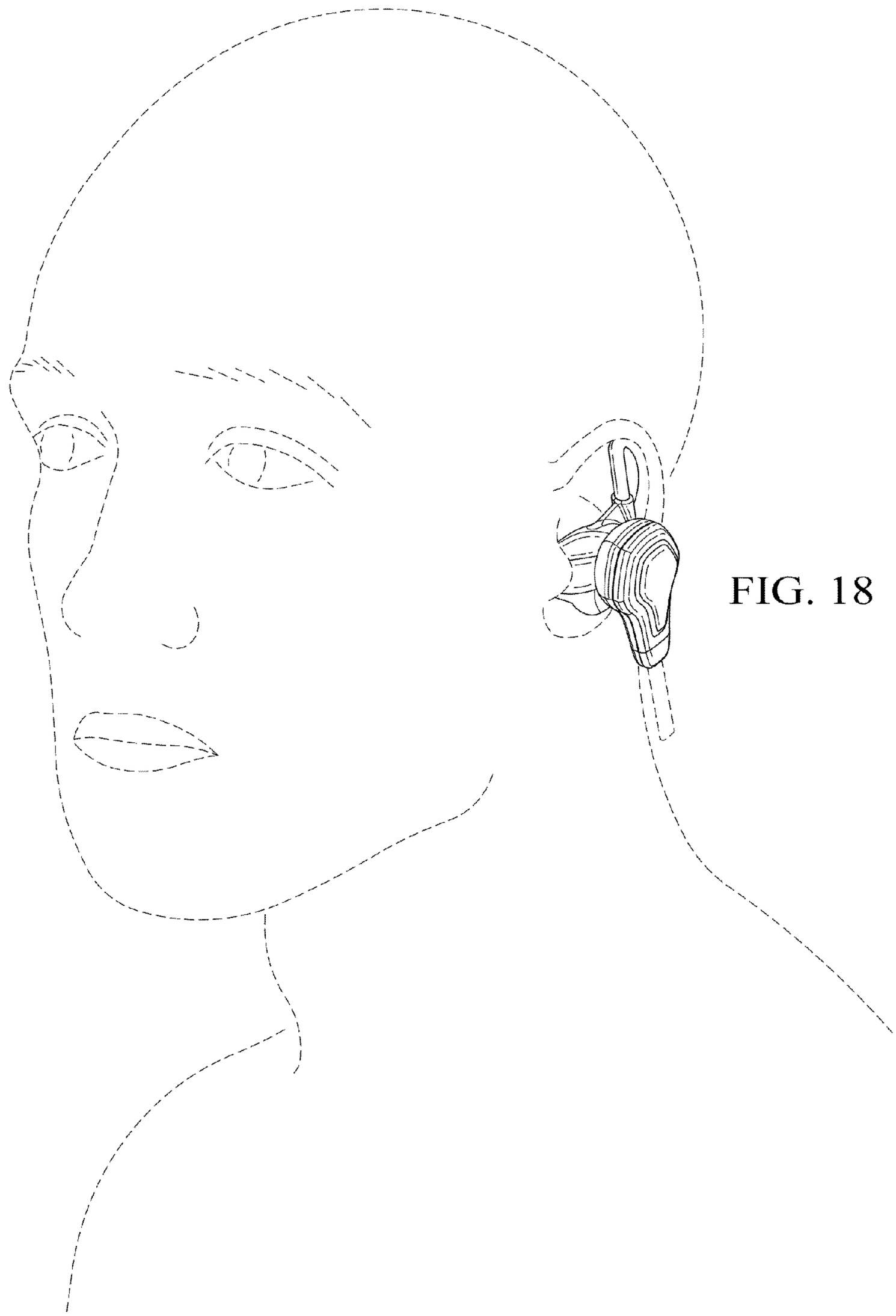

FIG. 18