US00D746328S

(12) United States Design Patent
Kim

(10) Patent No.: US D746,328 S
(45) Date of Patent: ** Dec. 29, 2015

(54) **DISPLAY SCREEN OR PORTION THEREOF WITH ICON**

(71) Applicant: **Samsung Electronics Co., Ltd.**, Suwon-si (KR)

(72) Inventor: **Jae-In Kim**, Goyang-si (KR)

(73) Assignee: **Samsung Electronics Co., Ltd.**, Suwon-si (KR)

(**) Term: **14 Years**

(21) Appl. No.: **29/476,206**

(22) Filed: **Dec. 12, 2013**

(30) **Foreign Application Priority Data**

Sep. 3, 2013 (KR) 30-2013-0045227

(51) **LOC (10) Cl.** **14-04**

(52) **U.S. Cl.**
USPC **D14/489**

(58) **Field of Classification Search**
USPC D14/485, 488–493, 486
CPC G06F 3/04817; G06F 8/34; G06F 3/048
See application file for complete search history.

(56) **References Cited**

U.S. PATENT DOCUMENTS

5,237,305	A *	8/1993	Ishikuro et al.	340/286.01
6,522,340	B1 *	2/2003	Morgan et al.	345/620
D487,469	S *	3/2004	Glaser et al.	D14/489
D662,110	S *	6/2012	Steele et al.	D14/492
D684,185	S *	6/2013	van Dongen et al.	D14/489
D707,705	S *	6/2014	Folken et al.	D14/490
D708,209	S *	7/2014	Glaeske et al.	D14/488
D710,884	S *	8/2014	Winther et al.	D14/490
D726,205	S *	4/2015	Angelides	D14/486
D727,336	S *	4/2015	Allison et al.	D14/485
2007/0288868	A1 *	12/2007	Rhee et al.	715/840
2008/0168361	A1 *	7/2008	Forstall et al.	715/753
2008/0297483	A1 *	12/2008	Kim et al.	345/173
2008/0313568	A1 *	12/2008	Park et al.	715/835
2009/0295788	A1 *	12/2009	Duncan et al.	345/418
2010/0287469	A1 *	11/2010	Wang et al.	715/702
2011/0029930	A1 *	2/2011	Watanabe et al.	715/846
2013/0187780	A1 *	7/2013	Angelides	340/573.1
2015/0002436	A1 *	1/2015	Yano et al.	345/173

OTHER PUBLICATIONS

Vector—sound icons, by rahulred, CanStockPhoto [online], published Jun. 14, 2011. Retrieved from the Internet <URL: http://www.canstockphoto.com/images-photos/speaker-icon.html#file_view.php?id=6574059>.*

(Continued)

Primary Examiner — Sheryl Lane
Assistant Examiner — Nicole Shiflet
(74) *Attorney, Agent, or Firm* — NSIP Law

(57) **CLAIM**

The ornamental design for a display screen or portion thereof with icon, as shown and described.

DESCRIPTION

FIG. **1** is a front view of a display screen or portion thereof with icon, showing my new design;
FIG. **2** is a front view of a display screen or portion thereof with icon, showing an alternative embodiment of the new design;
FIG. **3** is a front view of a display screen or portion thereof with icon, showing an alternative embodiment of the new design; and,
FIG. **4** is a front view of a display screen or portion thereof with icon, showing an alternative embodiment of the new design.
The dot-dash broken lines illustrating portions of the display screen are included for the purpose of illustrating environmental structure and form no part of the claimed design.

1 Claim, 2 Drawing Sheets

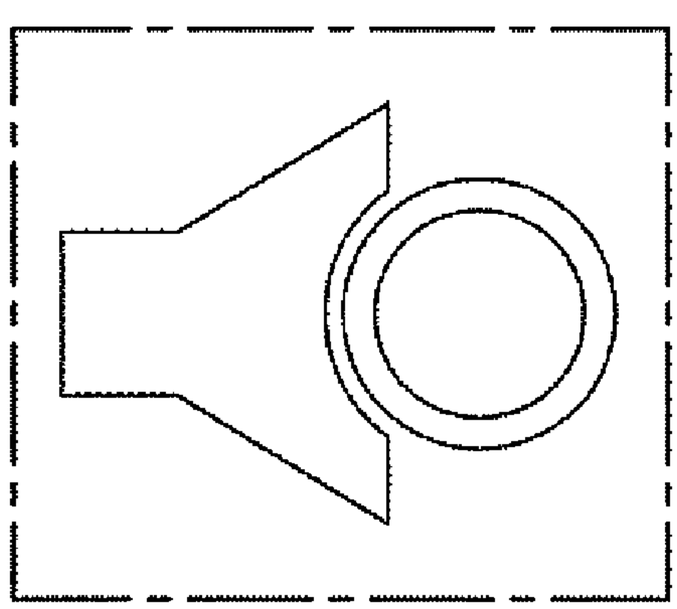

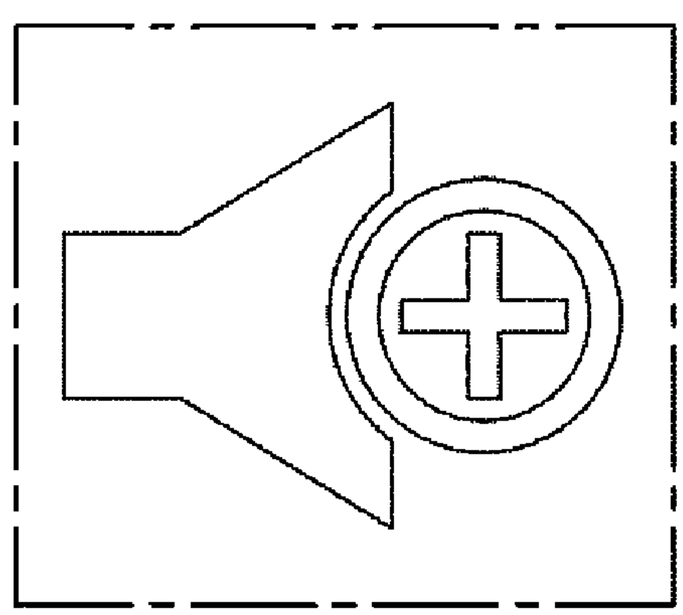

(56) **References Cited**

OTHER PUBLICATIONS

Mute Speaker Sign Icon, by Serhii Lohvyniuk, ShutterStock [online], [retrieved on Aug. 11, 2015]. Retrieved from the Internet <URL: http://www.shutterstock.com/pic-234002041/stock-vector-mute-speaker-sign-icon-sound-symbol-set-of-colourful-buttons-vector-illustration.html>.*

Speaker with Prohibition Sign, by Nobelus, ShutterStock [online], [retrieved on Aug. 11, 2015]. Retrieved from the Internet <URL: http://www.shutterstock.com/pic-267230042/stock-vector-speaker-with-prohibition-sign-silence-mute.html?src=Eki6ehb355SQ5aJPjTll1A-1-18>.*

* cited by examiner

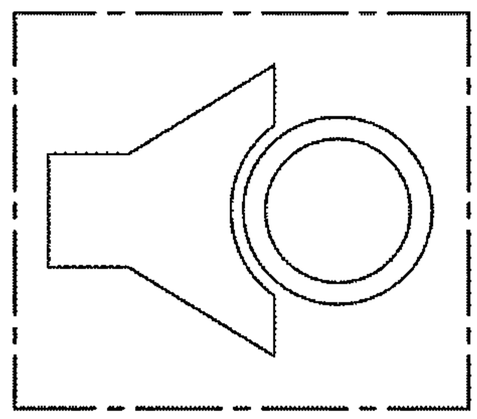

FIG. 1

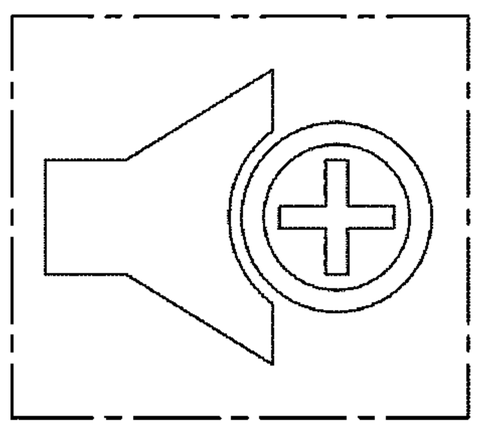

FIG. 2

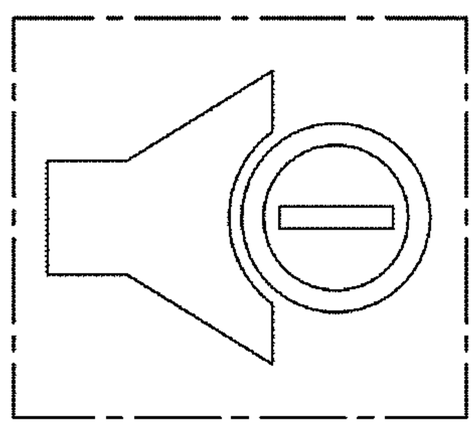

FIG. 3

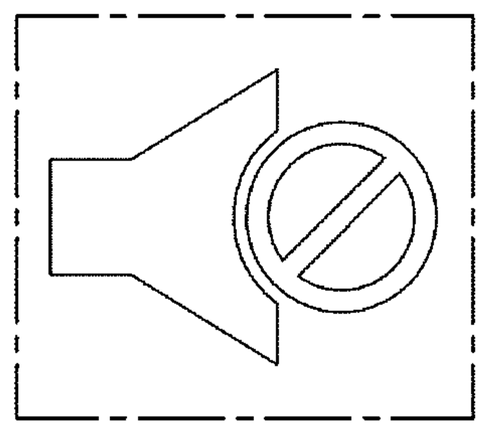

FIG. 4