US00D745961S

(12) United States Design Patent
Pickett

(10) **Patent No.: US D745,961 S**
(45) **Date of Patent: ** Dec. 22, 2015**

(54) **CEILING FAN MOTOR HOUSING**

(71) Applicant: **YOUNGO LIMITED**, Central (HK)

(72) Inventor: **Mark Pickett**, Altadena, CA (US)

(73) Assignee: **YOUNGO LIMITED**, Central (HK)

(**) Term: **14 Years**

(21) Appl. No.: **29/502,611**

(22) Filed: **Sep. 17, 2014**

(51) **LOC (10) Cl.** **23-04**

(52) **U.S. Cl.**
USPC **D23/411**

(58) **Field of Classification Search**
USPC D23/370–385, 411–414, 59; 392/360–364
CPC F04D 29/34; F04D 29/38; F04D 25/088
See application file for complete search history.

(56) **References Cited**

U.S. PATENT DOCUMENTS

D437,043 S * 1/2001 Wettergren D23/370
D524,434 S * 7/2006 Hidalgo D23/377
D527,452 S * 8/2006 Hidalgo D23/411
D527,453 S * 8/2006 Hidalgo D23/411
D551,753 S * 9/2007 Ertze D23/411
D583,922 S * 12/2008 Hidalgo D23/377

* cited by examiner

Primary Examiner — Sandra Snapp
(74) *Attorney, Agent, or Firm* — Bruce Stone LLP; Joseph Bruce

(57) **CLAIM**

The ornamental design for a ceiling fan motor housing, as shown and described.

DESCRIPTION

FIG. **1** is a perspective view of the present design;
FIG. **2** is a front view of the present design;
FIG. **3** is a rear view of the present design;
FIG. **4** is a left side view of the present design;
FIG. **5** is a right side view of the present design;
FIG. **6** is a top view of the present design; and,
FIG. **7** is a bottom view of the present design.
The broken lines showing structural features are for illustrative purposes only and form no part of the claimed design.

1 Claim, 7 Drawing Sheets

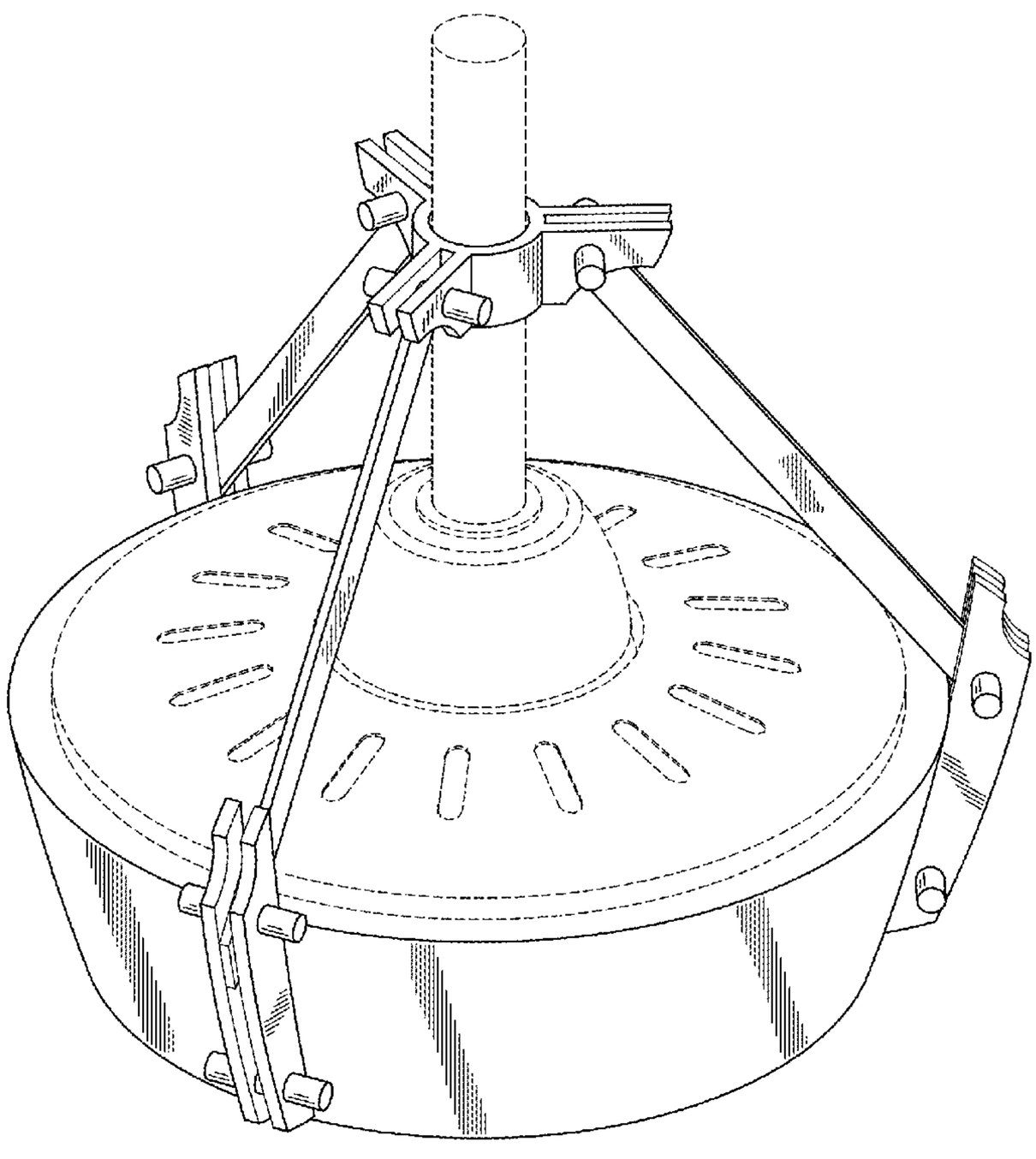

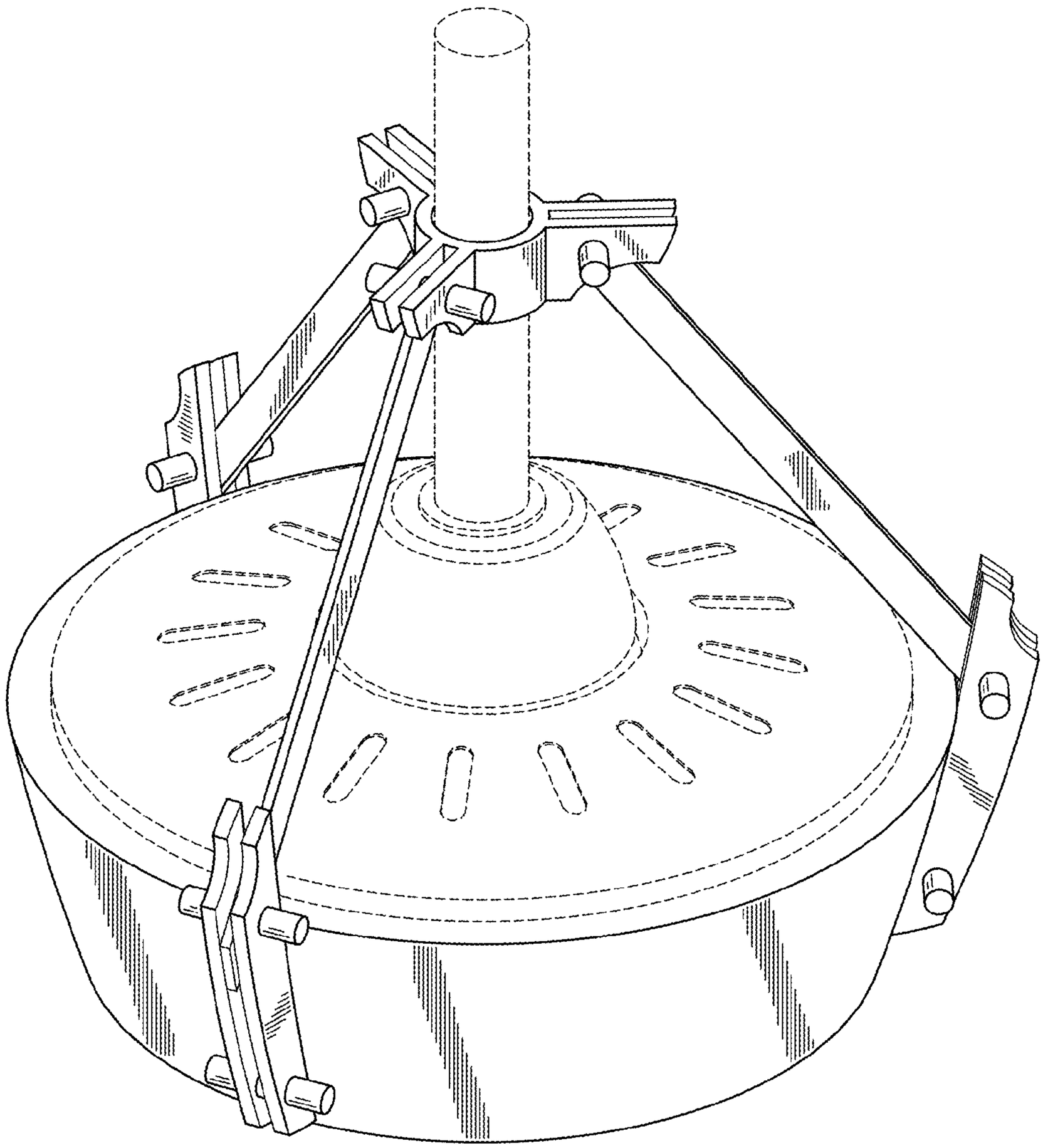

FIG. 1

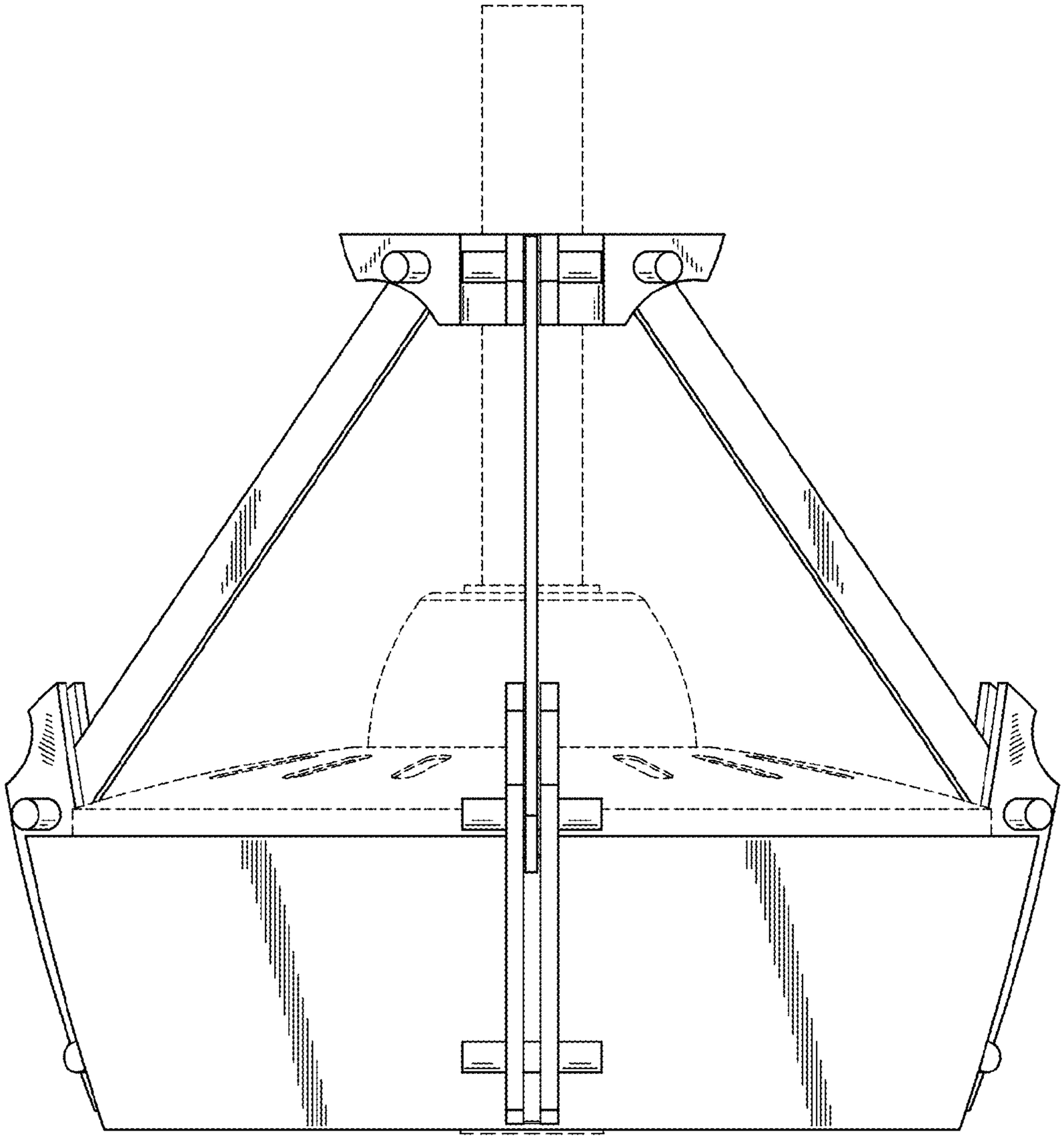

FIG. 2

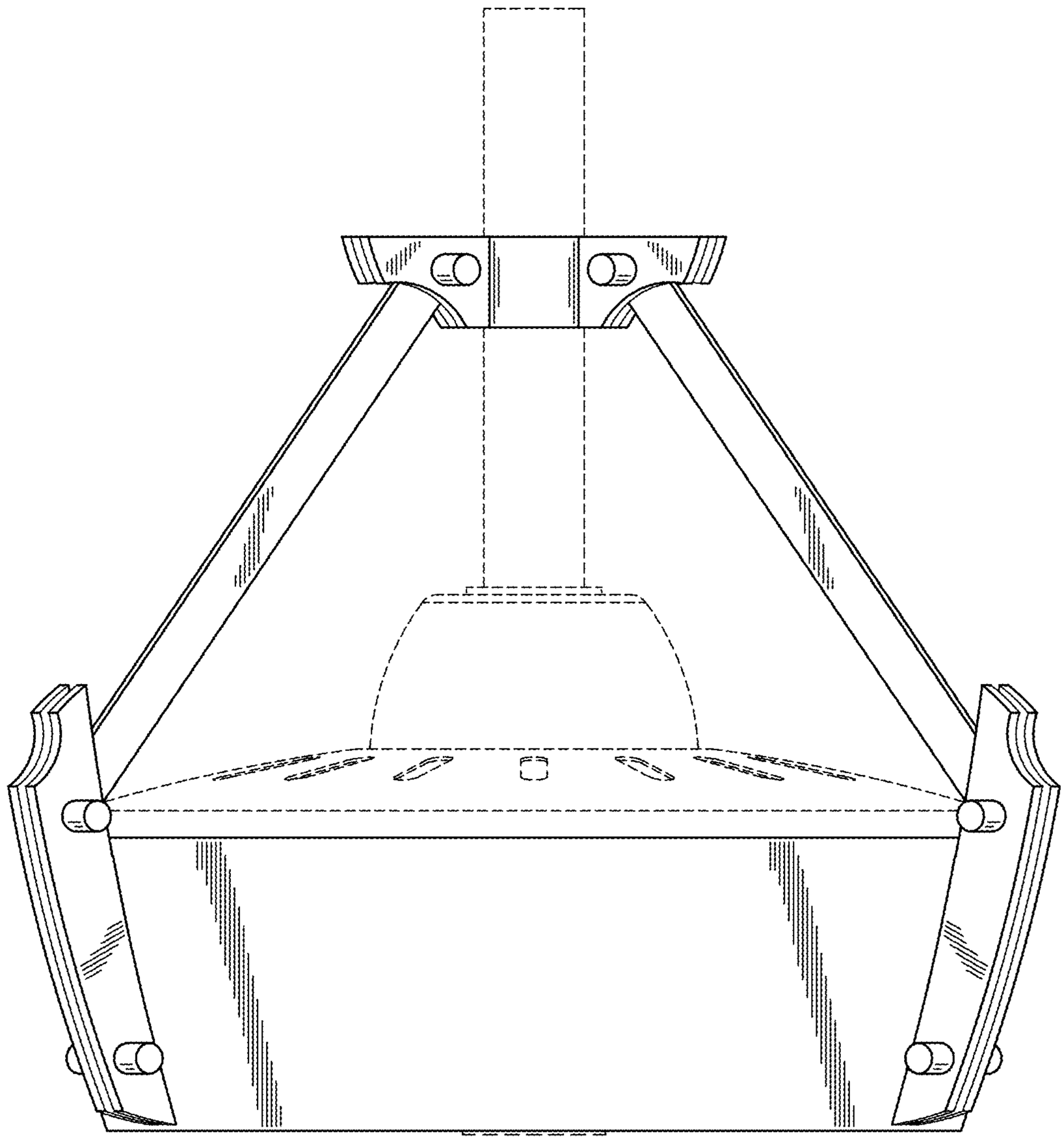

FIG. 3

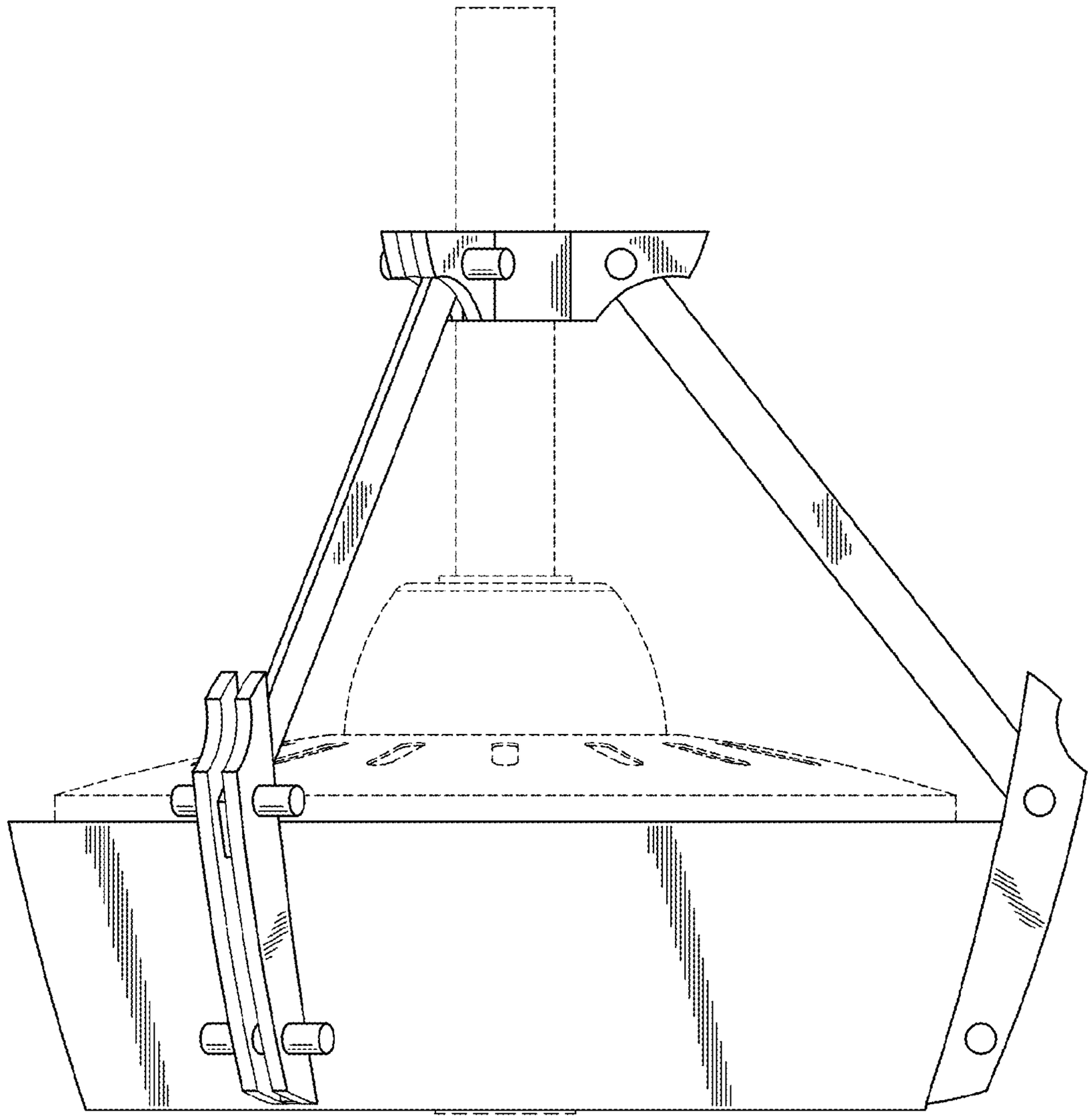

FIG. 4

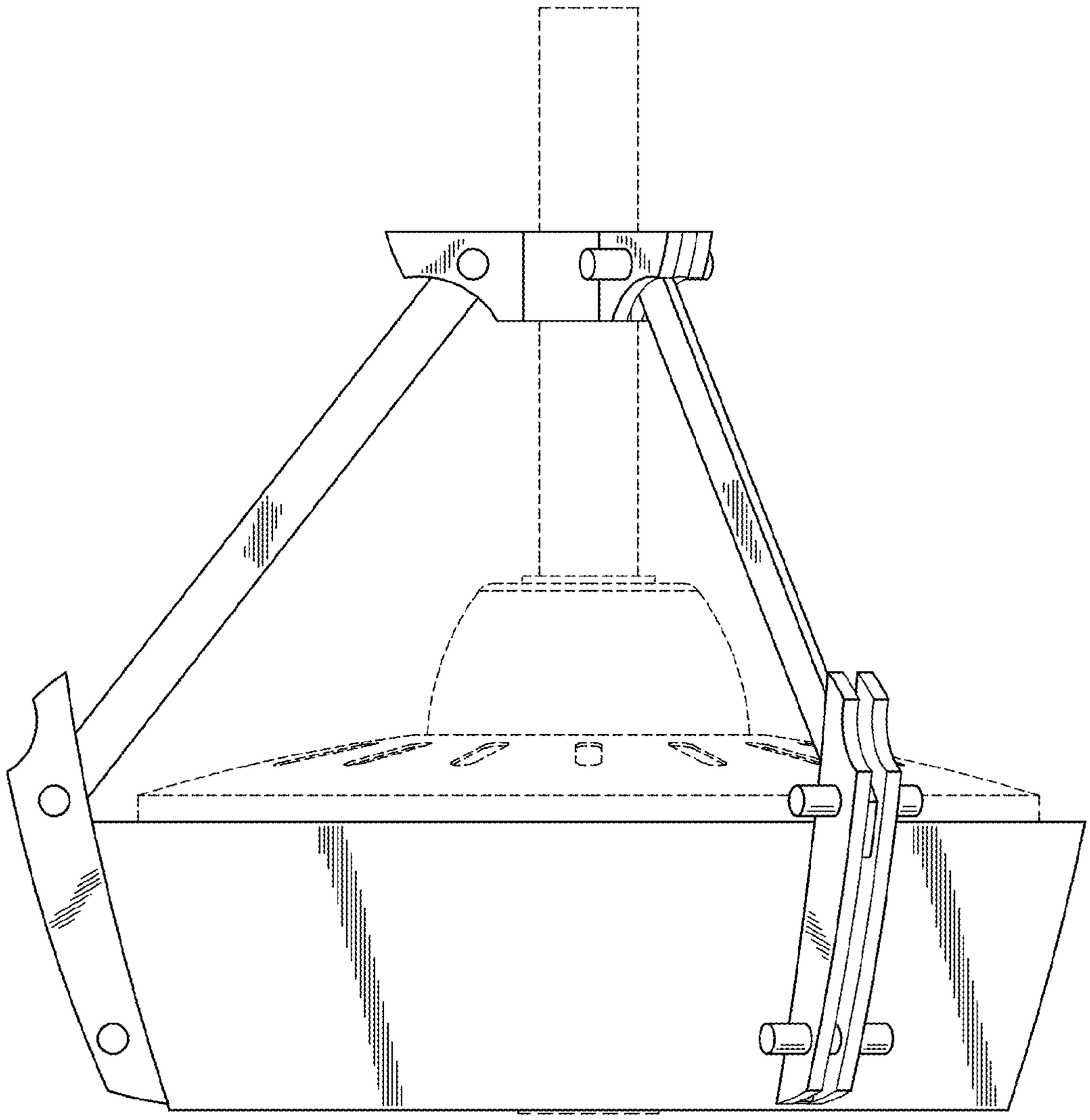

FIG. 5

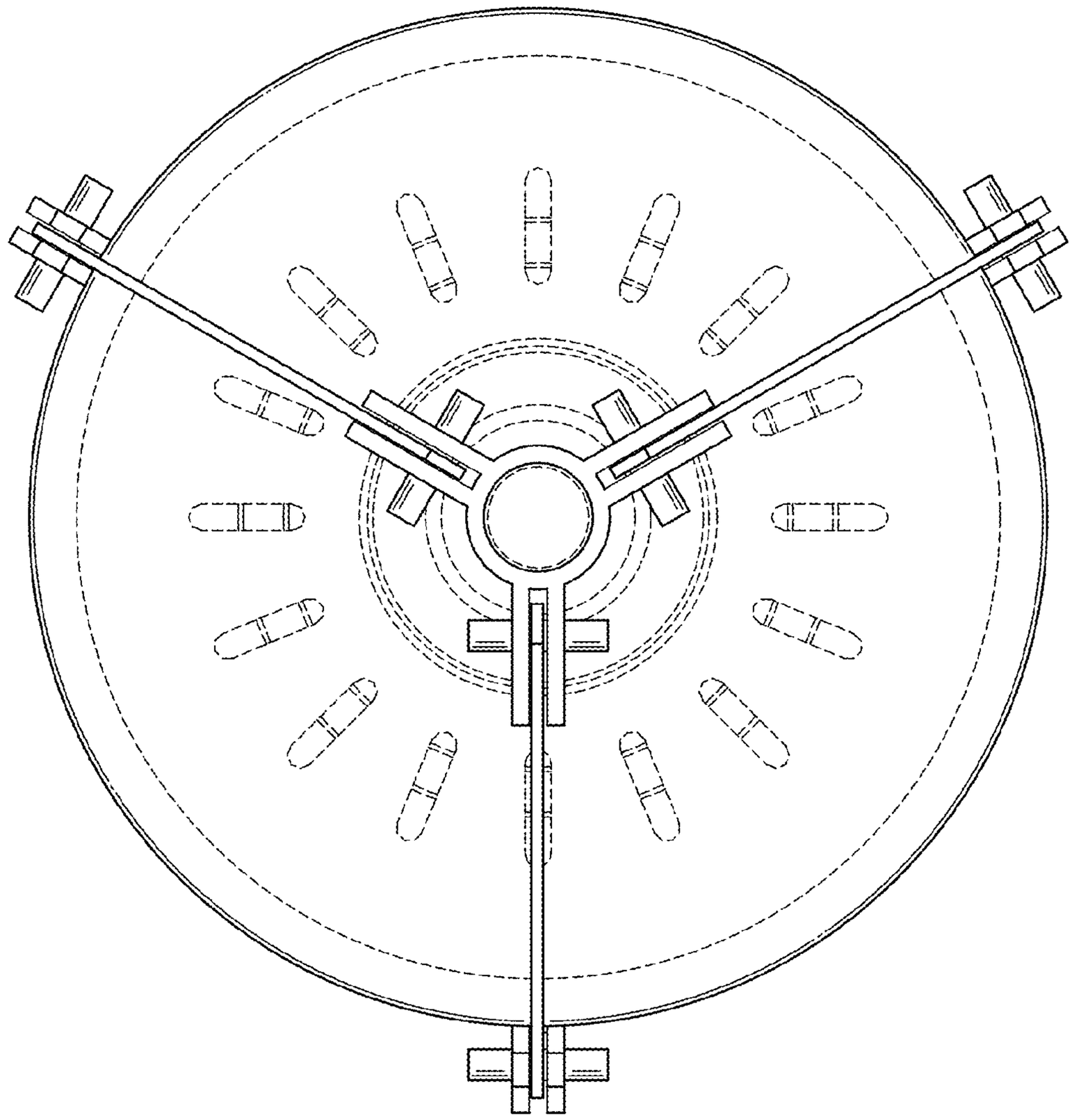

FIG. 6

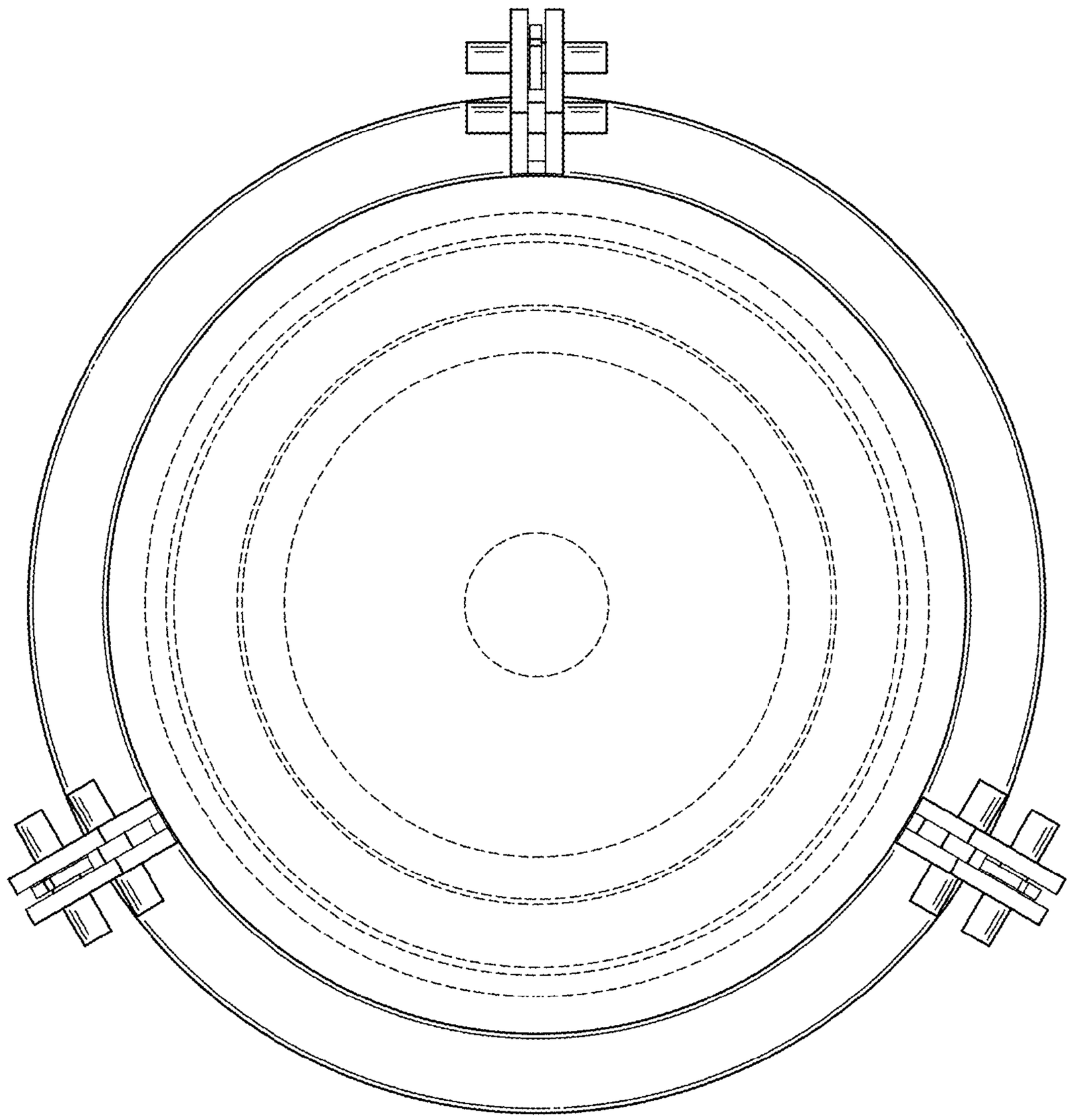

FIG. 7