US00D745131S

(12) United States Design Patent

Sinur et al.

(10) Patent No.: US D745,131 S
(45) Date of Patent: ** Dec. 8, 2015

(54) **RANGE HOOD**

(71) Applicant: **Broan-NuTone LLC**, Hartford, WI (US)

(72) Inventors: **Richard R. Sinur**, West Bend, WI (US); **Gregory T. Ruggles**, Hartford, WI (US); **Brian R. Wellnitz**, Grafton, WI (US)

(73) Assignee: **Broan-NuTone LLC**, Hartford, WI (US)

(**) Term: **14 Years**

(21) Appl. No.: **29/493,756**

(22) Filed: **Jun. 12, 2014**

Related U.S. Application Data

(63) Continuation of application No. 29/458,592, filed on Jun. 20, 2013, now Pat. No. Des. 709,606, and a continuation of application No. 29/458,589, filed on Jun. 20, 2013.

(51) **LOC (10) Cl.** **23-04**

(52) **U.S. Cl.**
USPC **D23/372**

(58) **Field of Classification Search**
USPC ..... D23/370–385, 411–414, 365; 415/60, 415/66, 68, 208.1, 213.1, 214.1; 310/257; 361/695; 126/299 D, 299 R
CPC F24C 15/20
See application file for complete search history.

(56) **References Cited**

U.S. PATENT DOCUMENTS

2,487,607 A 11/1949 Sonntag
D179,237 S 11/1956 Bernstein

(Continued)

OTHER PUBLICATIONS

"U.S. Appl. No. 29/458,592, Non Final Office Action mailed Sep. 27, 2013", 7 pgs.

(Continued)

Primary Examiner — Susan Bennett Hattan
Assistant Examiner — Janice Hallmark
(74) *Attorney, Agent, or Firm* — Schwegman Lundberg & Woessner, P.A.

(57) **CLAIM**

The ornamental design for a range hood, as shown and described.

DESCRIPTION

FIG. **1** is a top perspective view of one embodiment of a range hood.
FIG. **2** is a bottom perspective view of one embodiment of a range hood of FIG. **1**.
FIG. **3** is a top view of one embodiment of a range hood of FIG. **1**.
FIG. **4** is a front view of one embodiment of a range hood of FIG. **1**.
FIG. **5** is side view of one embodiment of a range hood of FIG. **1**.
FIG. **6** is a rear view of one embodiment of a range hood of FIG. **1**.
FIG. **7** is a bottom view of one embodiment of a range hood of FIG. **1**.
FIG. **8** is a top perspective view of a second embodiment of a range hood.
FIG. **9** is a bottom perspective view of a second embodiment of a range hood of FIG. **8**.
FIG. **10** is a top view of a second embodiment of a range hood of FIG. **8**.
FIG. **11** is a front view of a second embodiment of a range hood of FIG. **8**.
FIG. **12** is a side view of a second embodiment of a range hood of FIG. **8**.
FIG. **13** is a rear view of a second embodiment of a range hood of FIG. **8**; and,
FIG. **14** is a bottom view of a second embodiment of a range hood of FIG. **8**.
The features shown in broken lines depict environmental subject matter only and form no part of the claimed design.

1 Claim, 12 Drawing Sheets

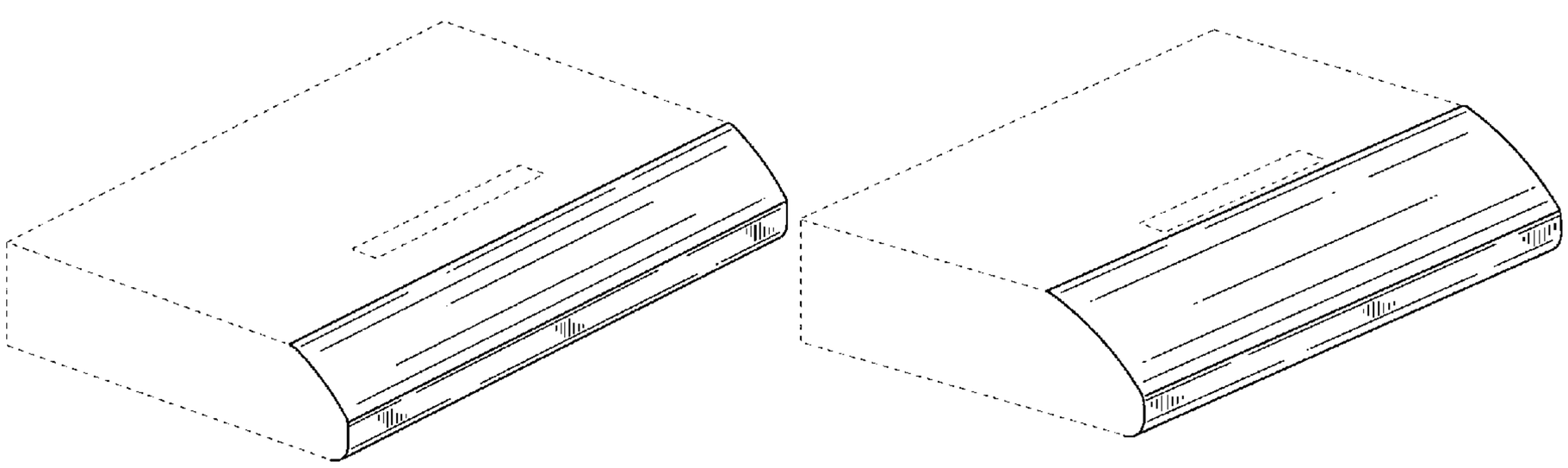

(56) **References Cited**

U.S. PATENT DOCUMENTS

2,807,994	A	10/1957	Bernstein	
2,886,124	A	5/1959	Scharmer	
2,993,428	A	7/1961	Wermager	
3,075,335	A	1/1963	Bandlow et al.	
3,098,423	A	7/1963	Giannini	
3,125,869	A	3/1964	Winton	
3,194,146	A	7/1965	Jenson	
3,585,920	A	6/1971	Johnson	
3,690,245	A	9/1972	Ferlise et al.	
4,120,290	A	10/1978	Bowen, Jr. et al.	
4,259,944	A	4/1981	Kalthoff et al.	
D274,934	S	7/1984	Johnson	
4,898,149	A	2/1990	Cohn	
D312,685	S	12/1990	Fleming et al.	
D315,204	S	3/1991	Fleming et al.	
5,027,790	A	7/1991	Chern	
D325,966	S	5/1992	Wei	
D327,541	S	6/1992	Chen	
5,230,327	A	7/1993	Jang et al.	
5,305,734	A	4/1994	Jang	
5,363,837	A	11/1994	Jang	
5,377,665	A	1/1995	Jang	
D361,376	S	8/1995	Isabelle et al.	
5,448,987	A	9/1995	Jang	
D367,319	S	2/1996	Isabelle et al.	
D375,351	S	11/1996	Conforti	
D380,823	S	7/1997	LaZar	
5,678,532	A	10/1997	Wu	
D392,380	S	3/1998	Schrank et al.	
D395,495	S	6/1998	Wu	
D433,495	S	11/2000	Segers	
D436,658	S	1/2001	Goulet	
6,216,686	B1	4/2001	Chiu	
D450,829	S	11/2001	Bothe et al.	
D451,587	S	12/2001	Goulet	
6,401,709	B1 *	6/2002	Okamoto et al.	126/299 D
6,427,679	B1	8/2002	Chen	
D473,297	S	4/2003	Bothe et al.	
D482,769	S	11/2003	Bothe et al.	
6,802,310	B1 *	10/2004	Yeung	126/299 D
D521,622	S	5/2006	Bothe et al.	
D532,507	S	11/2006	Vetter	
D535,150	S	1/2007	Tse	
D535,381	S	1/2007	Chiang	
D557,786	S	12/2007	Tse	
D558,322	S	12/2007	Lebeuf et al.	
D566,822	S	4/2008	Blanchette et al.	
D567,929	S	4/2008	Tse	
D571,446	S	6/2008	Martin et al.	
D594,956	S	6/2009	Blanchette et al.	
D611,590	S	3/2010	Grey	
D611,591	S	3/2010	Grey	
D635,235	S	3/2011	Hoshino et al.	
D659,232	S	5/2012	Funnell, II	
D676,542	S	2/2013	Sinur et al.	
D677,775	S	3/2013	Funnell, II	
D694,385	S	11/2013	Funnell, II	
D694,393	S	11/2013	Funnell, II	
D695,387	S	12/2013	Murphey et al.	
D699,831	S	2/2014	Funnell, II	
D709,606	S *	7/2014	Sinur et al.	D23/372
2007/0256681	A1	11/2007	Chiang et al.	
2008/0190411	A1	8/2008	Chiang et al.	
2011/0036340	A1	2/2011	Chu	
2013/0087133	A1	4/2013	Davis et al.	

OTHER PUBLICATIONS

"U.S. Appl. No. 29/458,592, Notice of Allowance mailed Mar. 4, 2014", 6 pgs.

"Maytag 30 in. Non-Vented Range Hood in Stainless Steel", Model # UXT4030AYS, Home Depot, [Online] Retrieved From Internet: <http://www.homedepot.co m/p/Maytag-30-in-Non-Vented-Range-Hood-in-Stainless-Steel-UXT4030AYS/202832999#customer_reviews>, (Jul. 9, 2011).

"Whirlpool 30" and 36" Range Hood Models UXT3030AY/UXT3036AY", Installation Instructions and Use & Care Guide, [Online] Retrieved From Internet: <http://www.whirlpool.ca/digitalassets/UXT3030AYB/Use%20and%20Care_EN.pdf>, (2011).

"U.S. Appl. No. 29/458,589, Notice of Allowance mailed Jul. 9, 2015", 11 pgs.

"U.S. Appl. No. 29/458,589, Response filed Apr. 27, 2015 to Restriction Requirement mailed Apr. 9, 2015", 4 pgs.

"U.S. Appl. No. 29/458,589, Restriction Requirement mailed Apr. 8, 2015", 4 pgs.

"U.S. Appl. No. 29/458,592, Response filed Dec. 27, 2013 to Non Final Office Action mailed Sep. 27, 2013", 8 pgs.

* cited by examiner

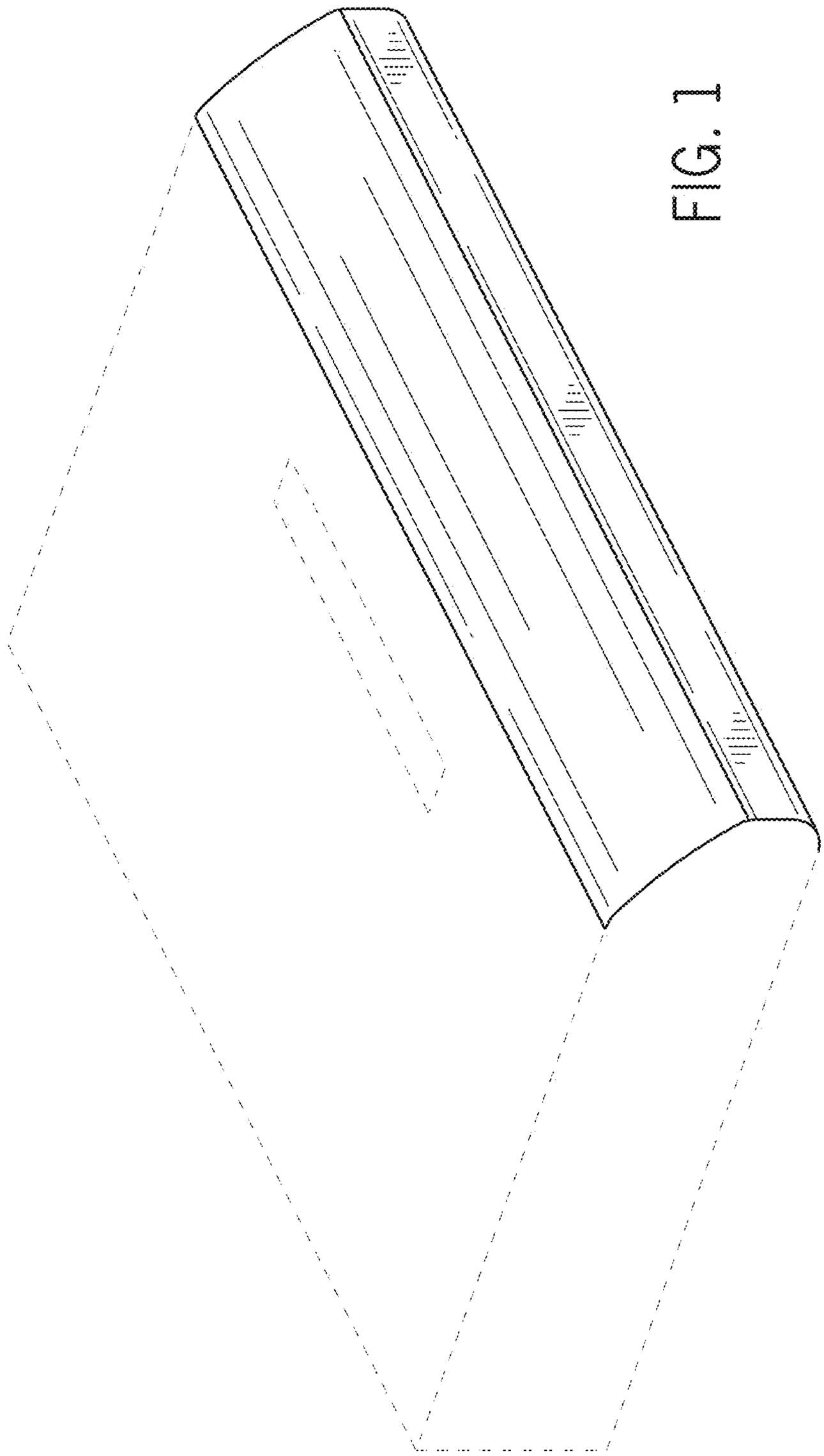

FIG. 1

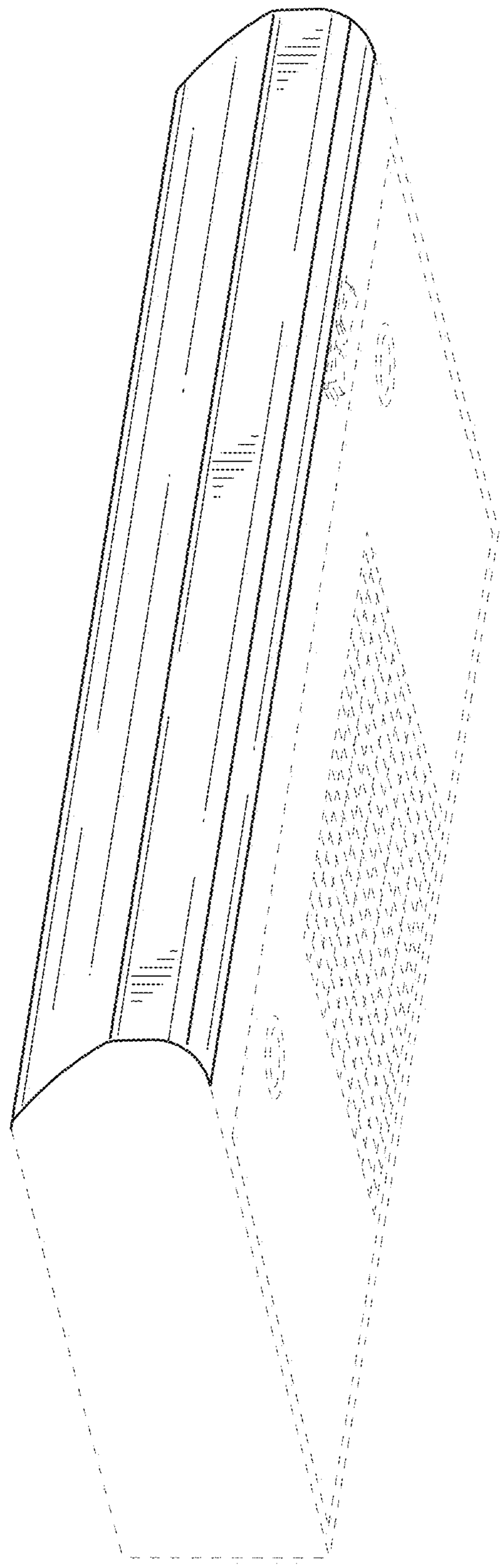

FIG. 2

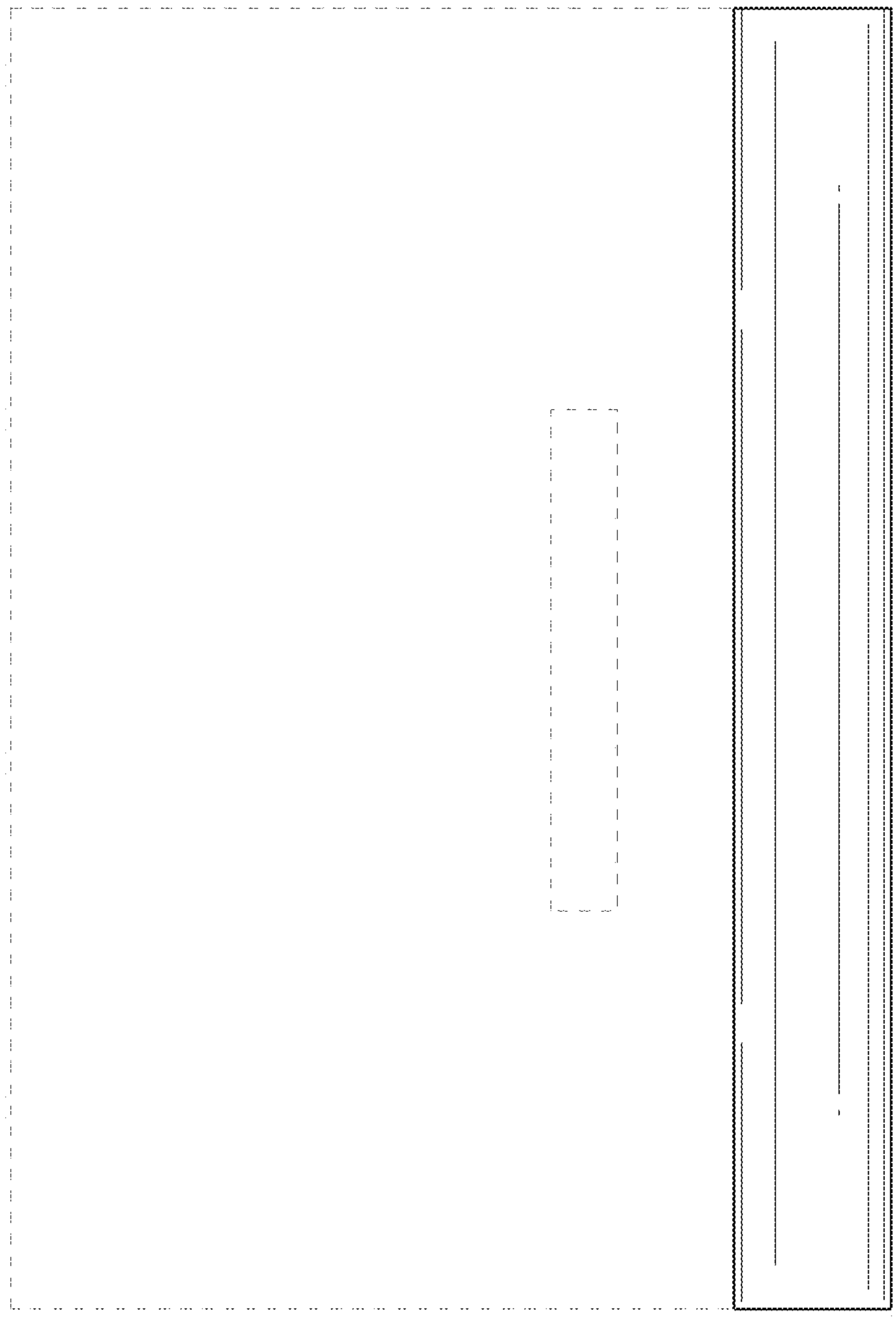

FIG. 3

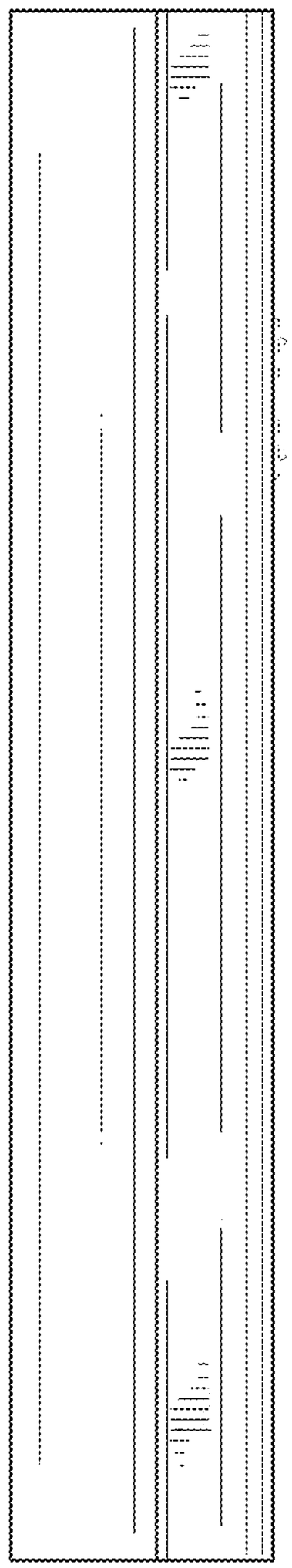

FIG. 4

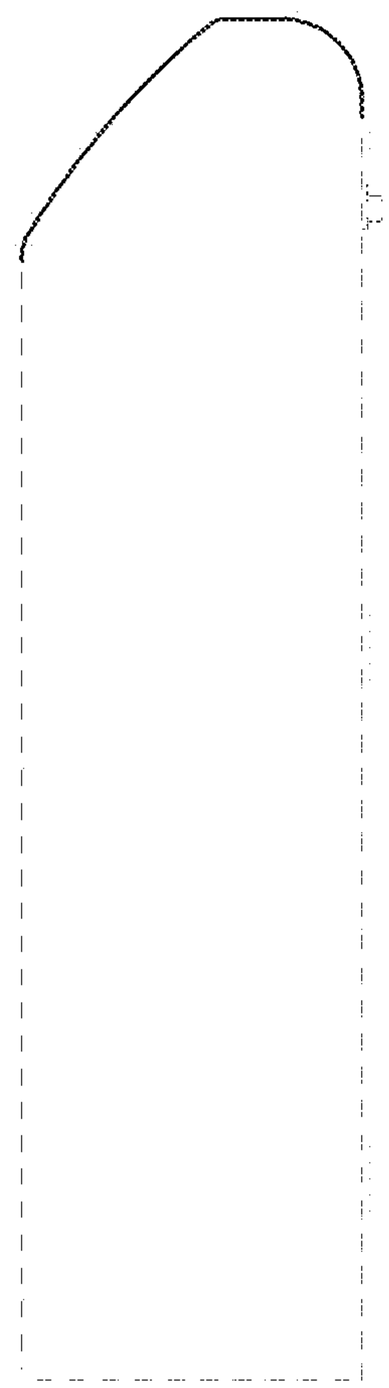

FIG. 5

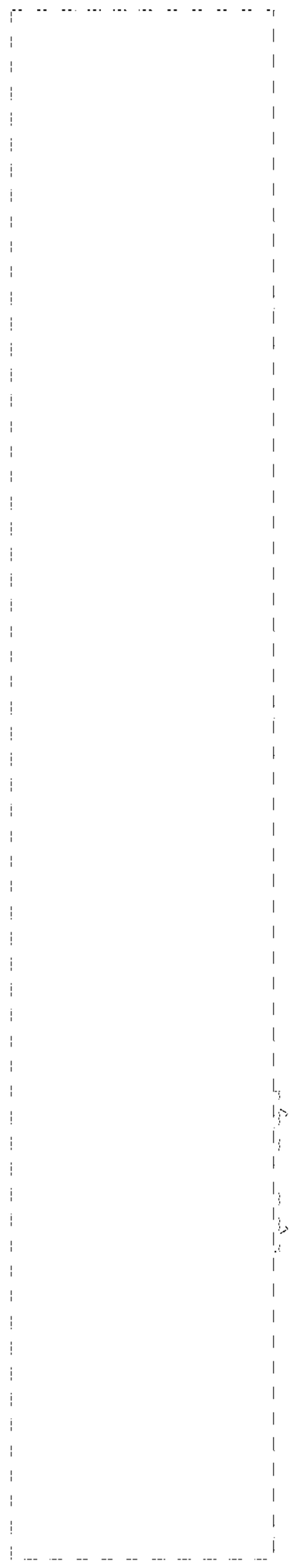

FIG. 6

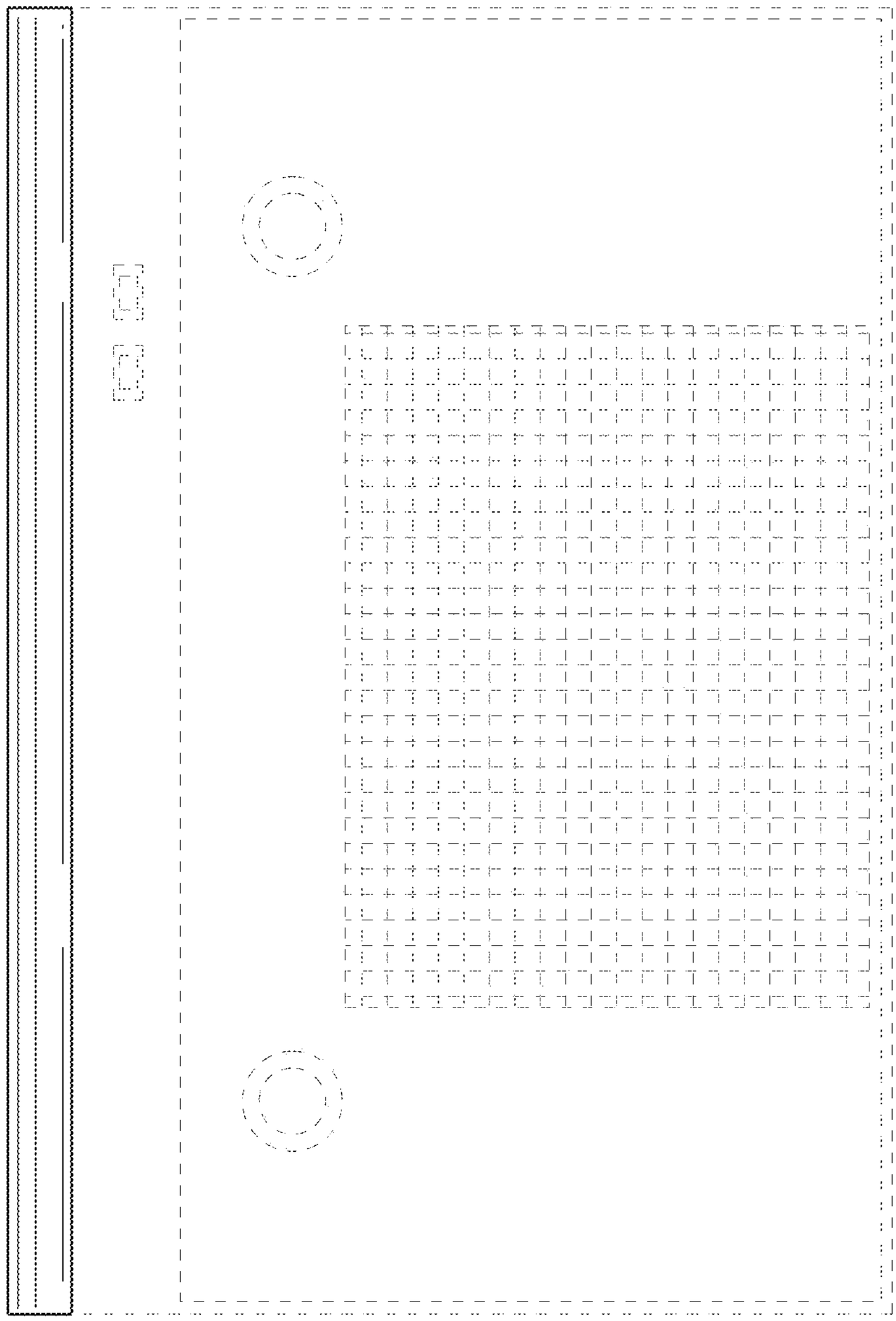

FIG. 7

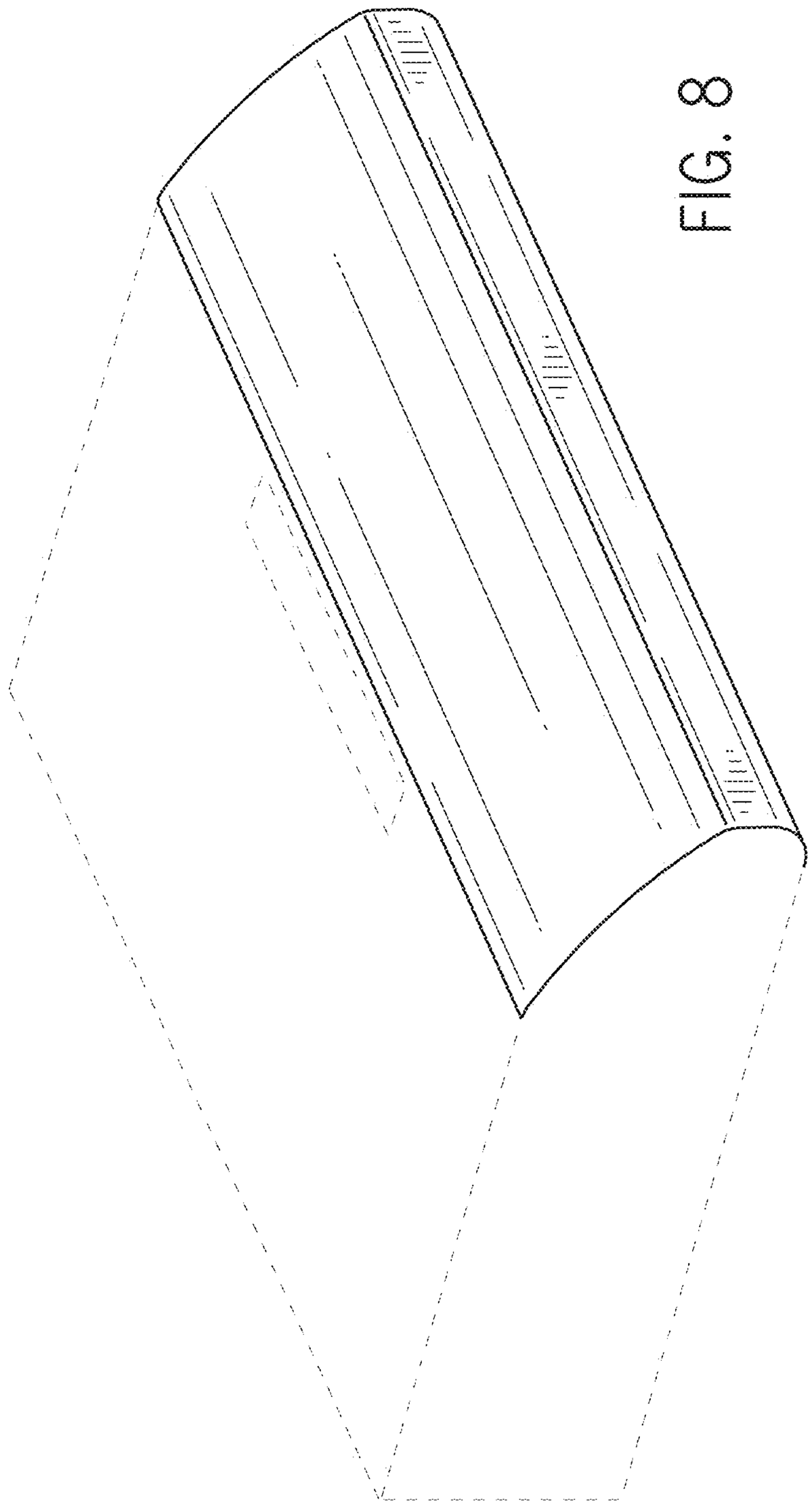

FIG. 8

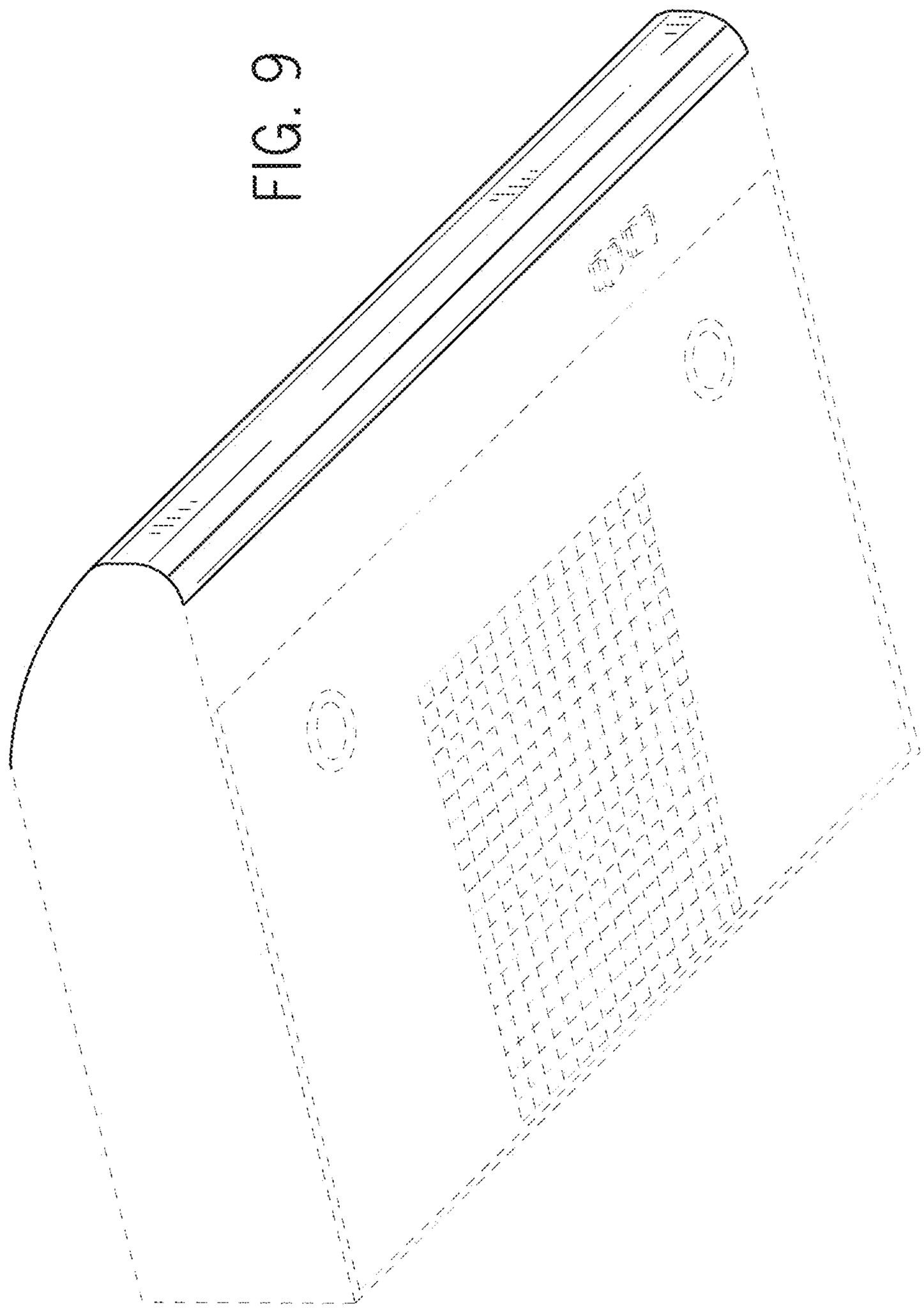

FIG. 9

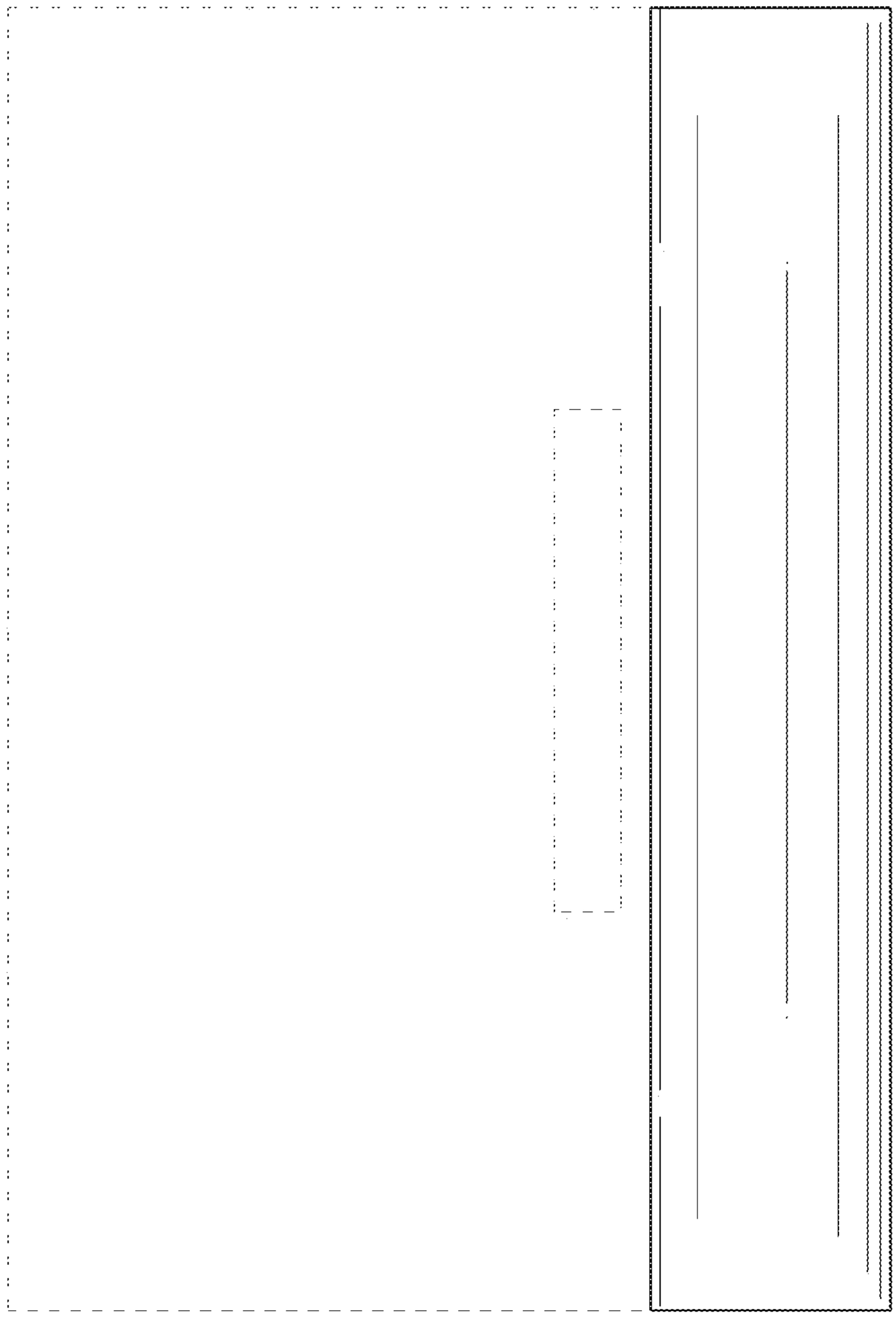

FIG. 10

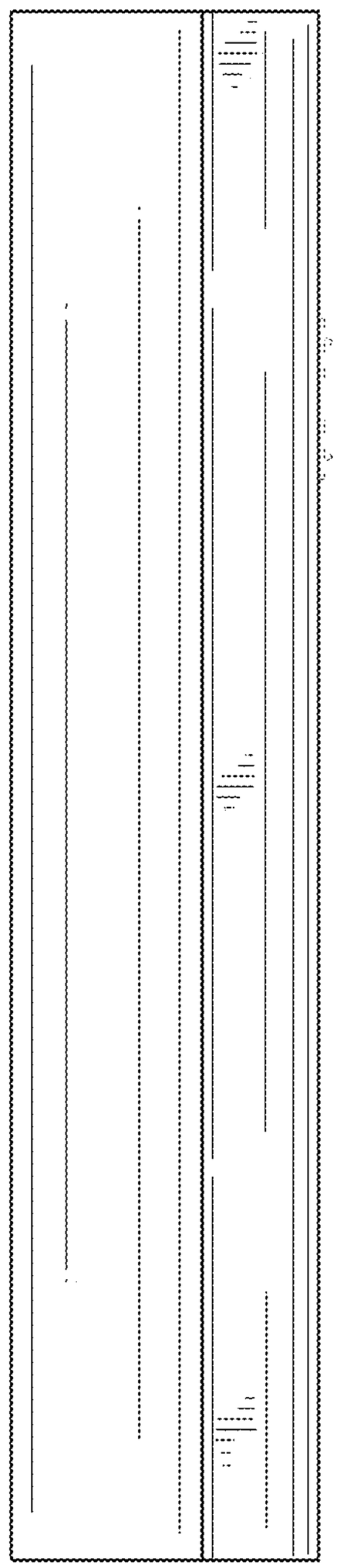

FIG. 11

FIG. 12

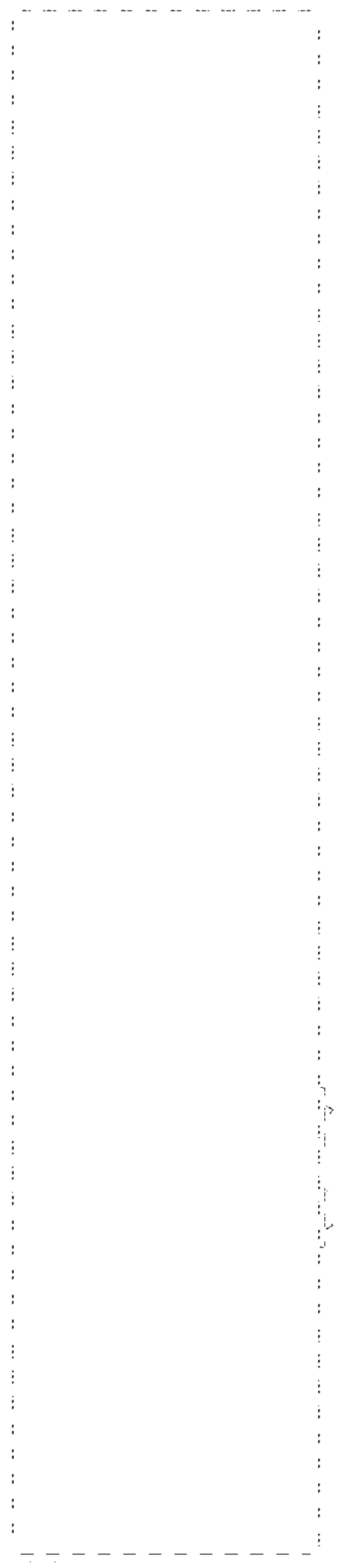

FIG. 13

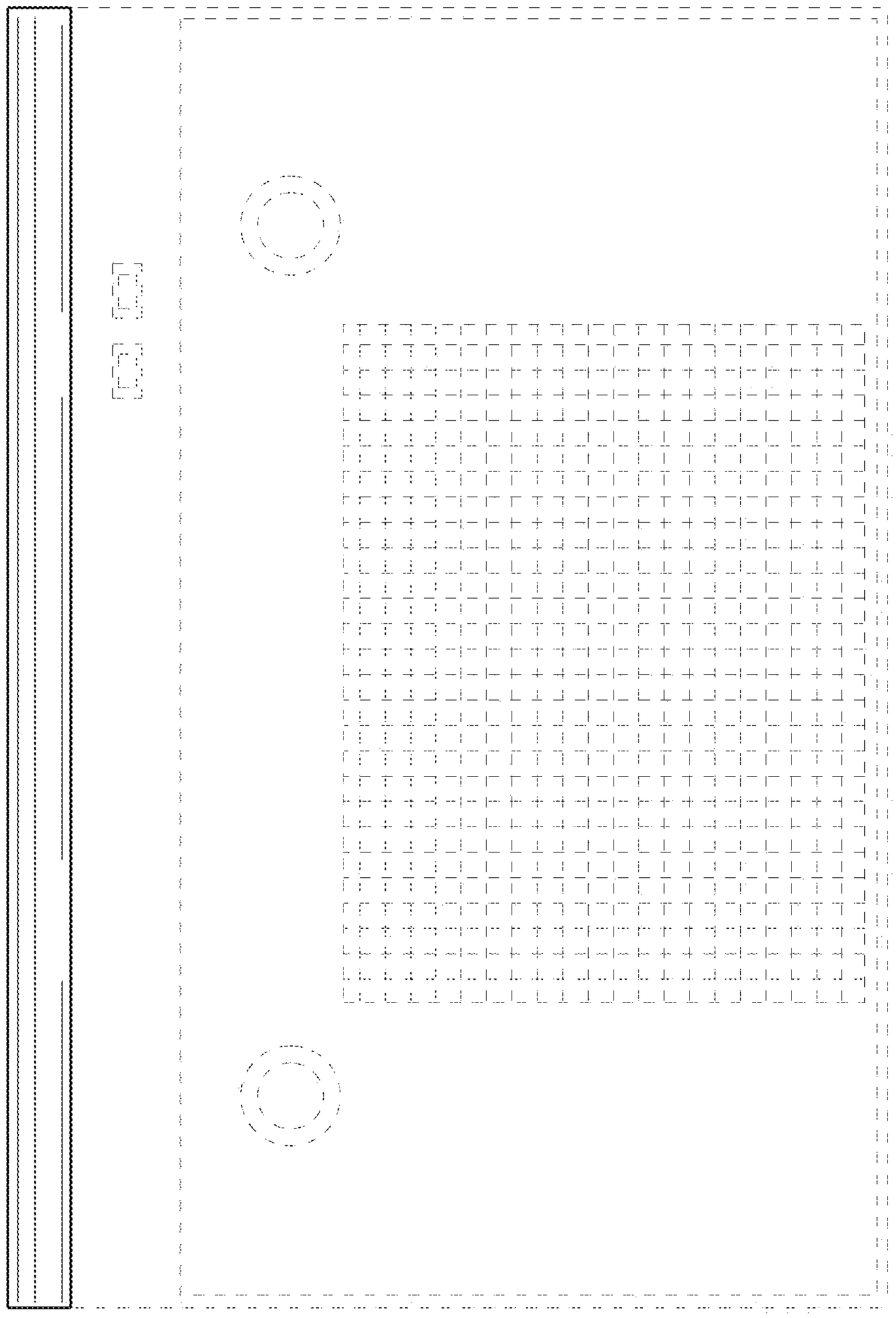

FIG. 14