US00D744947S

(12) United States Design Patent

Rabalais et al.

(10) Patent No.: US D744,947 S
(45) Date of Patent: ** Dec. 8, 2015

(54) **POWER SUPPLY FOR A BATTERY CHARGER**

(71) Applicant: **The Gillette Company**, Boston, MA (US)

(72) Inventors: **Brian Adam Rabalais**, New Milford, CT (US); **Eric Justin Price**, Wilton, CT (US); **Francisco Jose Restrepo**, Norwalk, CT (US); **Chen Jian**, ShenZhen (CN); **Zhang Yun**, ShenZhen (CN); **Paul Edward Backett**, Portland, OR (US); **David John Sayler**, Portland, OR (US); **Chunshik Kim**, Portland, OR (US)

(73) Assignee: **The Gillette Company**, Boston, MA (US)

(**) Term: **14 Years**

(21) Appl. No.: **29/526,158**

(22) Filed: **May 7, 2015**

Related U.S. Application Data

(62) Division of application No. 29/466,827, filed on Sep. 12, 2013, now Pat. No. Des. 731,966.

(51) **LOC (10) Cl.** **13-02**

(52) **U.S. Cl.**
USPC **D13/108**

(58) **Field of Classification Search**
USPC D13/107–110, 118–119, 184, 199; D14/251, 253, 432, 434
CPC H02J 7/025; H02J 7/0042; H02J 7/0044; H02J 7/0045; H02J 7/0054; H02J 7/0003; B60L 11/182; Y02E 60/12; Y02T 10/7005; Y02T 10/7088; Y02T 90/14; Y02T 90/163; Y02T 90/122; Y02T 90/128; H01M 2/1022; H01M 2/1055; H01M 10/46; H01M 10/44; H01M 10/425; H01F 38/14; H01R 13/6675
See application file for complete search history.

(56) **References Cited**

U.S. PATENT DOCUMENTS

D331,220	S	11/1992	Tsuchiya
D339,563	S	9/1993	Usami
D344,261	S	2/1994	Watanabe
D350,113	S	8/1994	Nagele
D357,224	S	4/1995	Nagele et al.
D367,257	S	2/1996	Buelow et al.
5,611,701	A	3/1997	Hahn
5,613,863	A	3/1997	Klaus et al.
D400,855	S	11/1998	Lee
D406,259	S	3/1999	Lindahl
D442,544	S	5/2001	Ku

(Continued)

Primary Examiner — Rosemary K Tarcza
(74) *Attorney, Agent, or Firm* — Leo J. White; Kevin C. Johnson; Steven W. Miller

(57) **CLAIM**

The ornamental design for a power supply for a battery charger, as shown and described above.

DESCRIPTION

FIG. **1** is a top perspective view of a design for a power supply for a battery charger of the present invention;
FIG. **2** is a top view thereof;
FIG. **3** is a bottom view thereof;
FIG. **4** is a front view thereof;
FIG. **5** is a back view thereof;
FIG. **6** is a right side view thereof;
FIG. **7** is a left side view thereof; and,
FIG. **8** is a bottom perspective view thereof.
The broken lines shown in the drawings are included for the purpose of illustrating environmental structure and form no part of the claimed design.

1 Claim, 7 Drawing Sheets

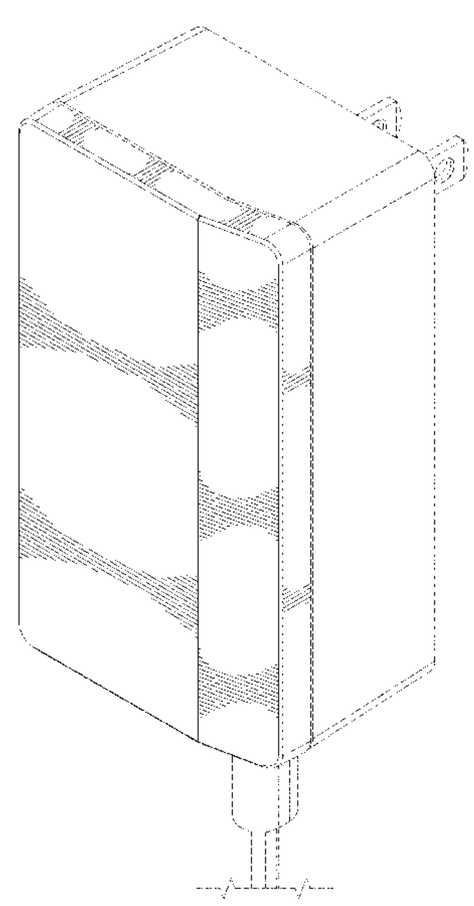

(56) **References Cited**

U.S. PATENT DOCUMENTS

D449,030	S		10/2001	Baxter et al.	
D454,537	S		3/2002	O'Connor et al.	
D456,008	S		4/2002	Kawanobe et al.	
D465,764	S		11/2002	Salazar et al.	
D473,515	S		4/2003	Salazar et al.	
D511,743	S	*	11/2005	Hriscu	D13/107
D543,935	S		6/2007	Ke	
D546,281	S		7/2007	Bell	
D552,029	S	*	10/2007	Kingston	D13/108
D564,960	S		3/2008	Sacco et al.	
D565,506	S		4/2008	Sacco et al.	
D572,654	S		7/2008	Kang et al.	
D572,655	S		7/2008	Oslecki et al.	
D574,321	S		8/2008	Oslecki et al.	
D596,562	S		7/2009	Hong et al.	
D623,129	S		9/2010	Kawakami et al.	
7,794,251	B2		9/2010	Wen et al.	
D638,355	S		5/2011	Chen	
D638,356	S		5/2011	Chen	
D676,382	S		2/2013	McSweyn	
D677,221	S		3/2013	McSweyn	
D677,223	S		3/2013	Cho	
D682,202	S		5/2013	Weaver et al.	
D683,310	S		5/2013	McSweyn	
D687,375	S		8/2013	Franco et al.	
D687,770	S	*	8/2013	Rabalais	D13/107
D689,818	S		9/2013	Sasada	
D692,825	S		11/2013	Izen	
D695,214	S		12/2013	Roberts et al.	
D713,788	S		9/2014	Hasegawa et al.	
D718,710	S		12/2014	Rabalais et al.	
D718,711	S		12/2014	Rabalais et al.	
2011/0148357	A1		6/2011	Lu	
2011/0210699	A1		9/2011	Wu	
2013/0307464	A1		11/2013	Zhu	

* cited by examiner

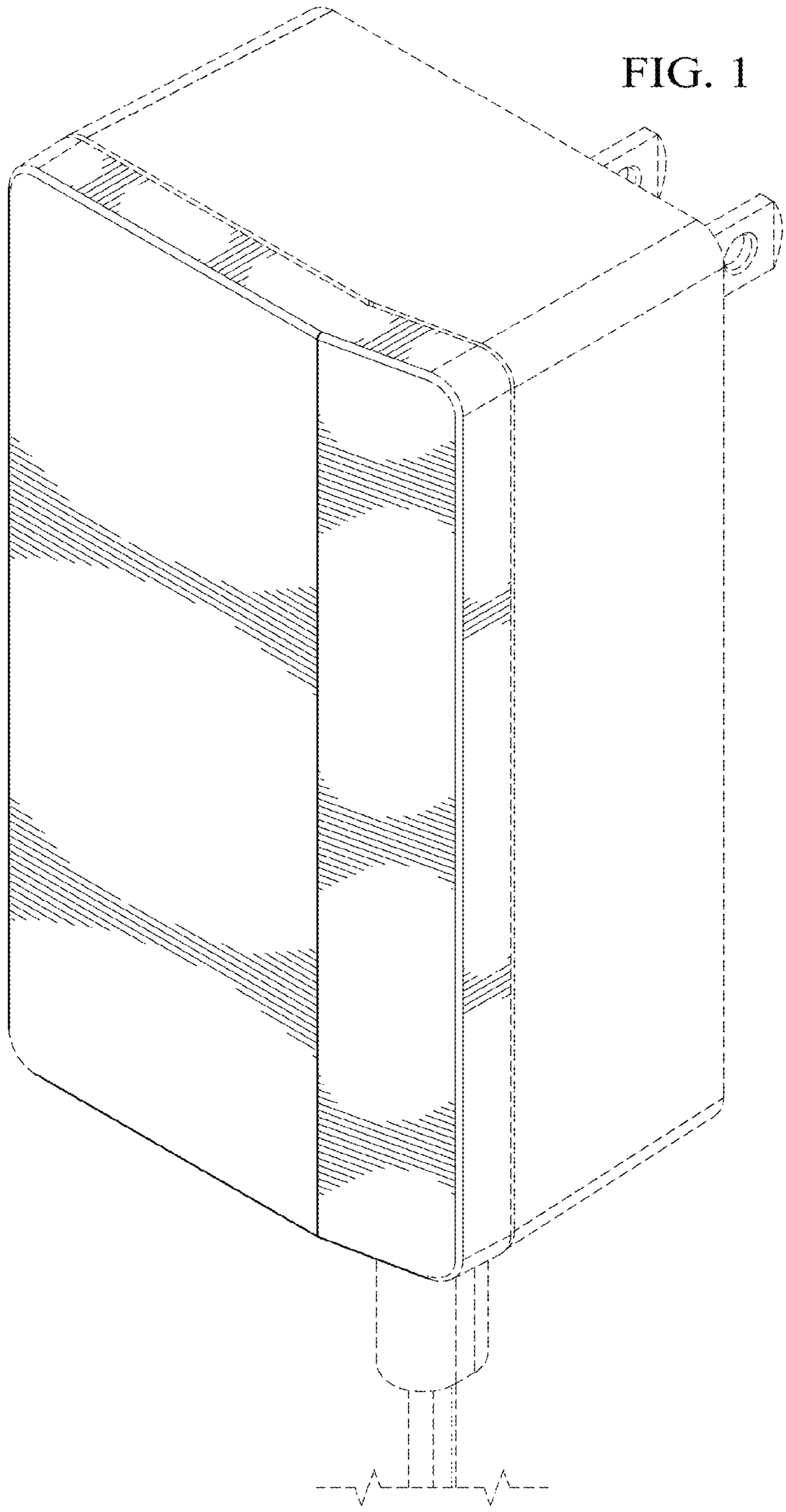
FIG. 1

FIG. 2

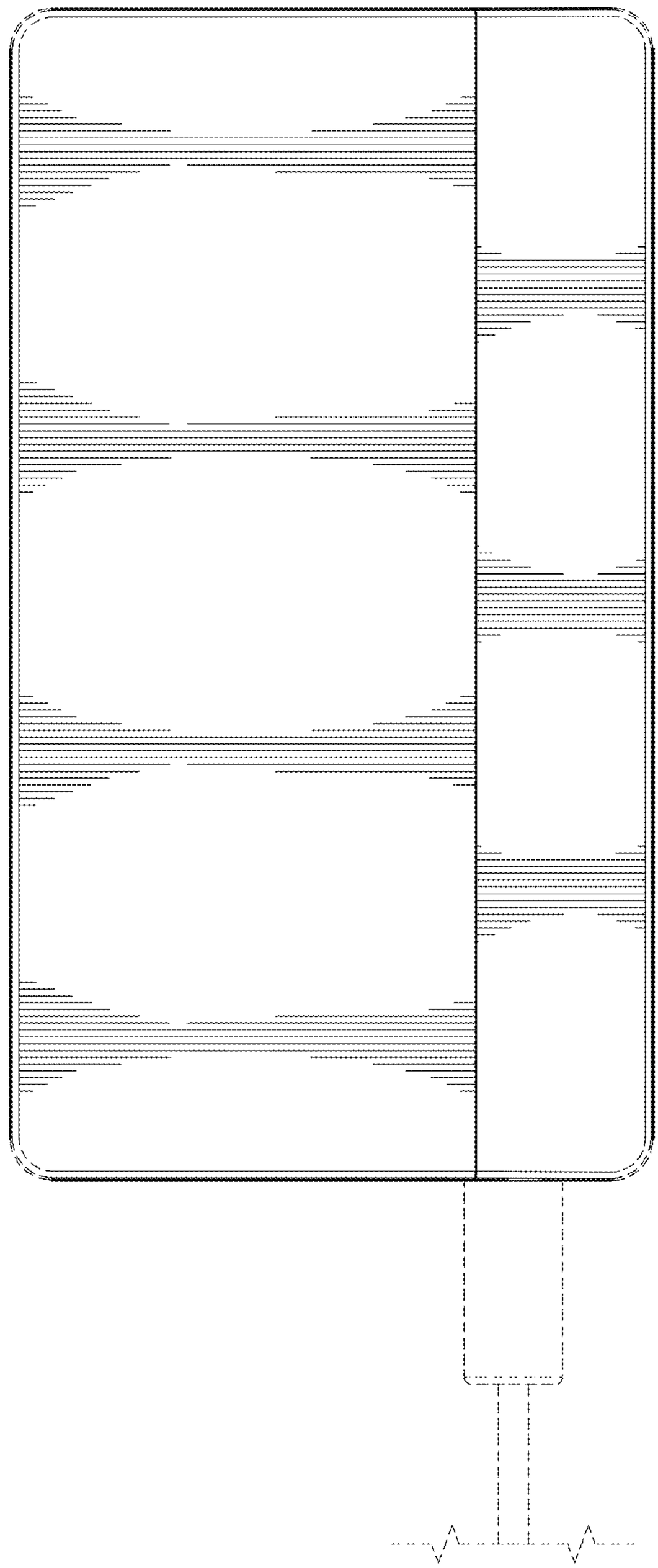

FIG. 3

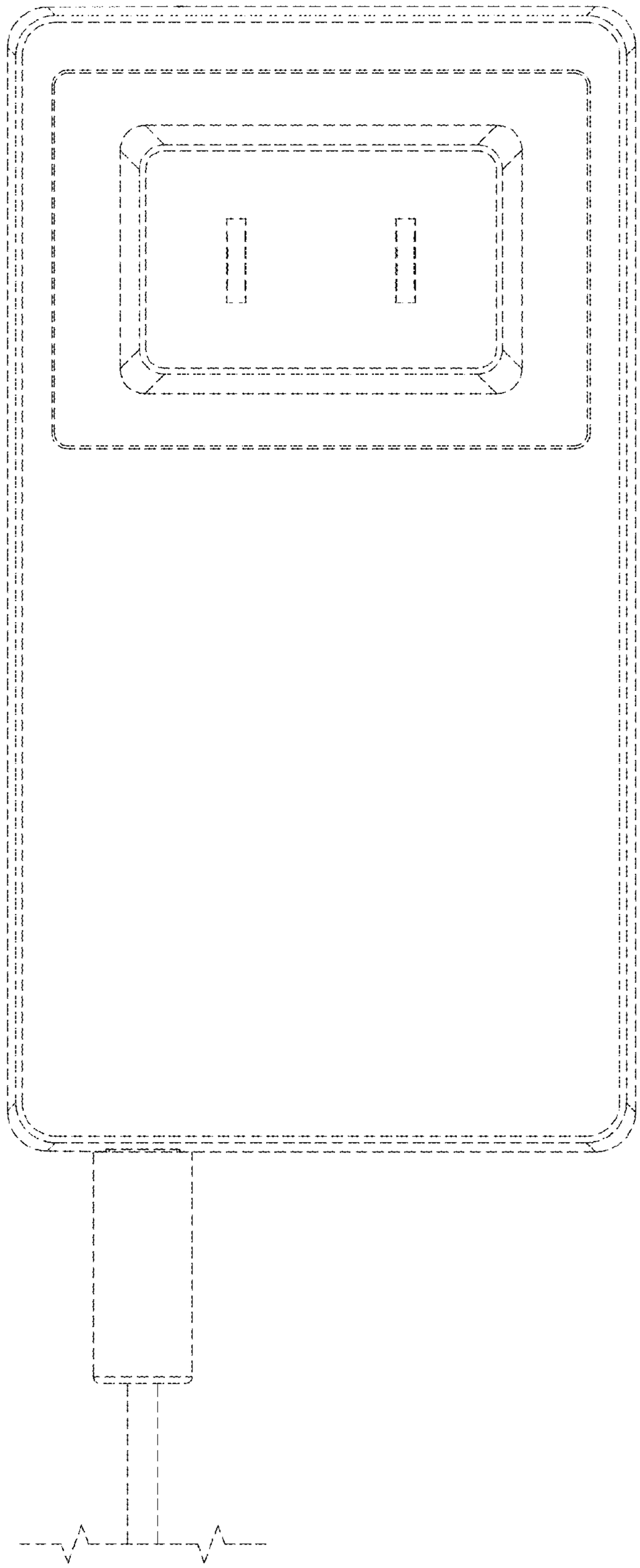

FIG. 4

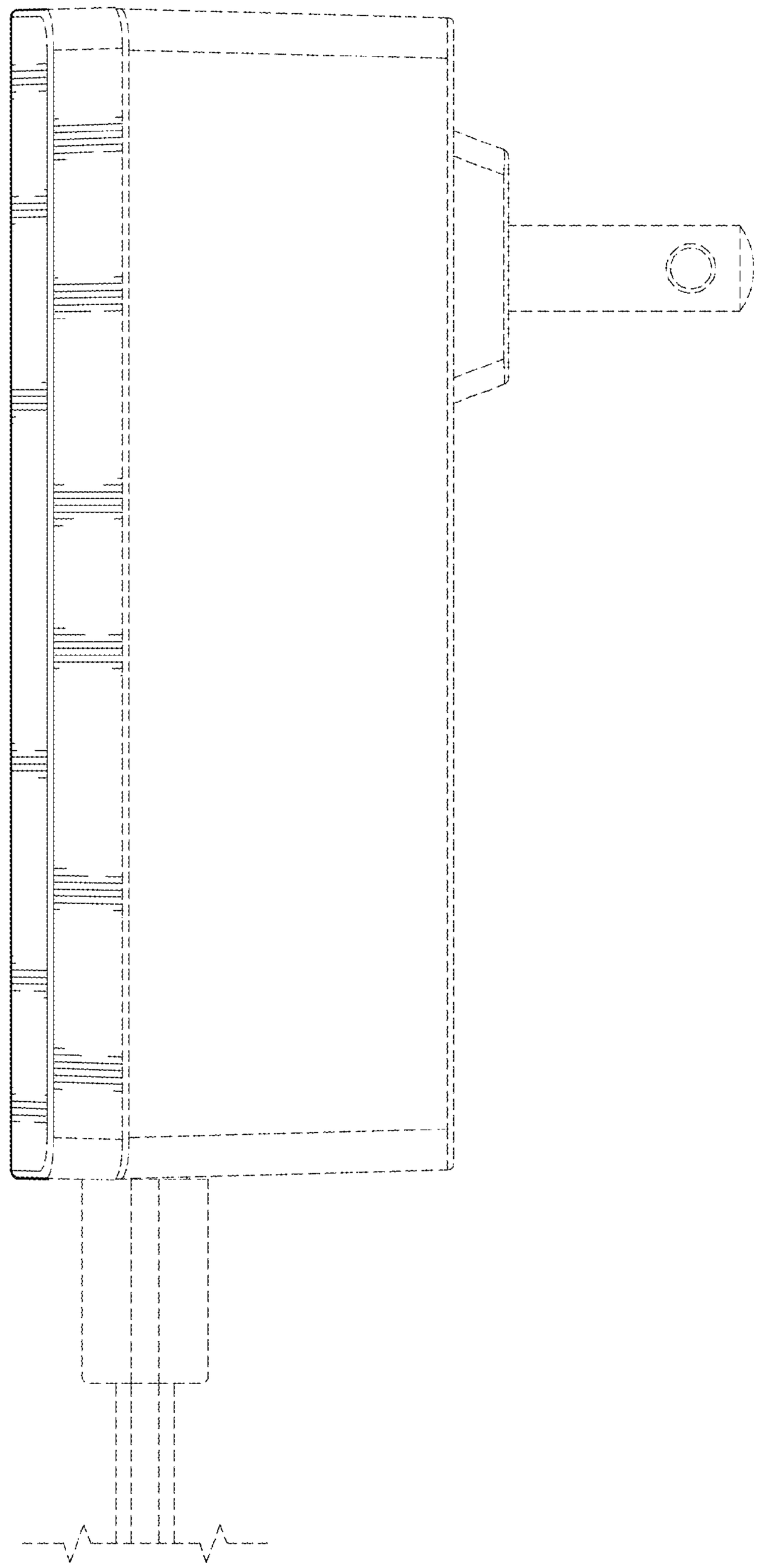

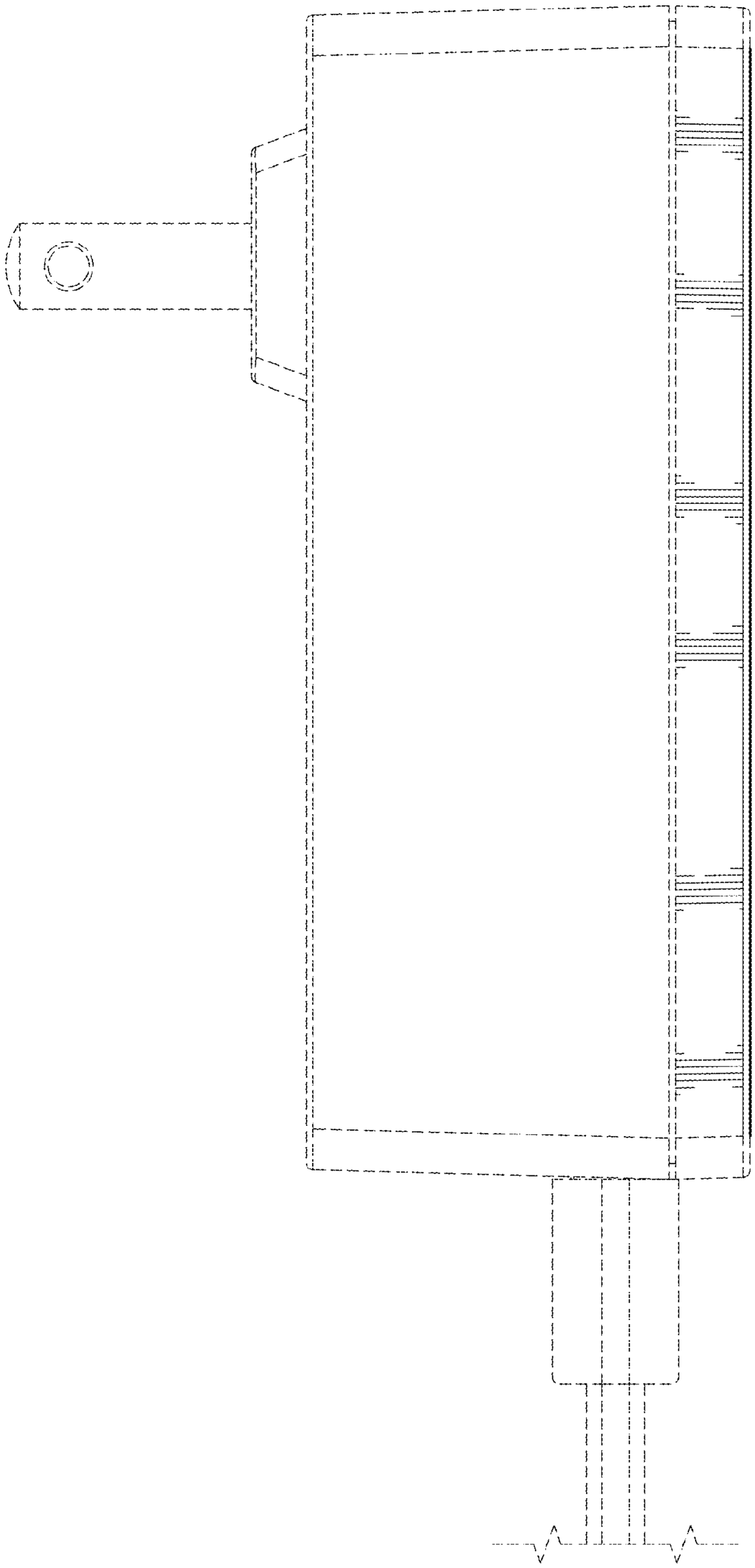

FIG. 5

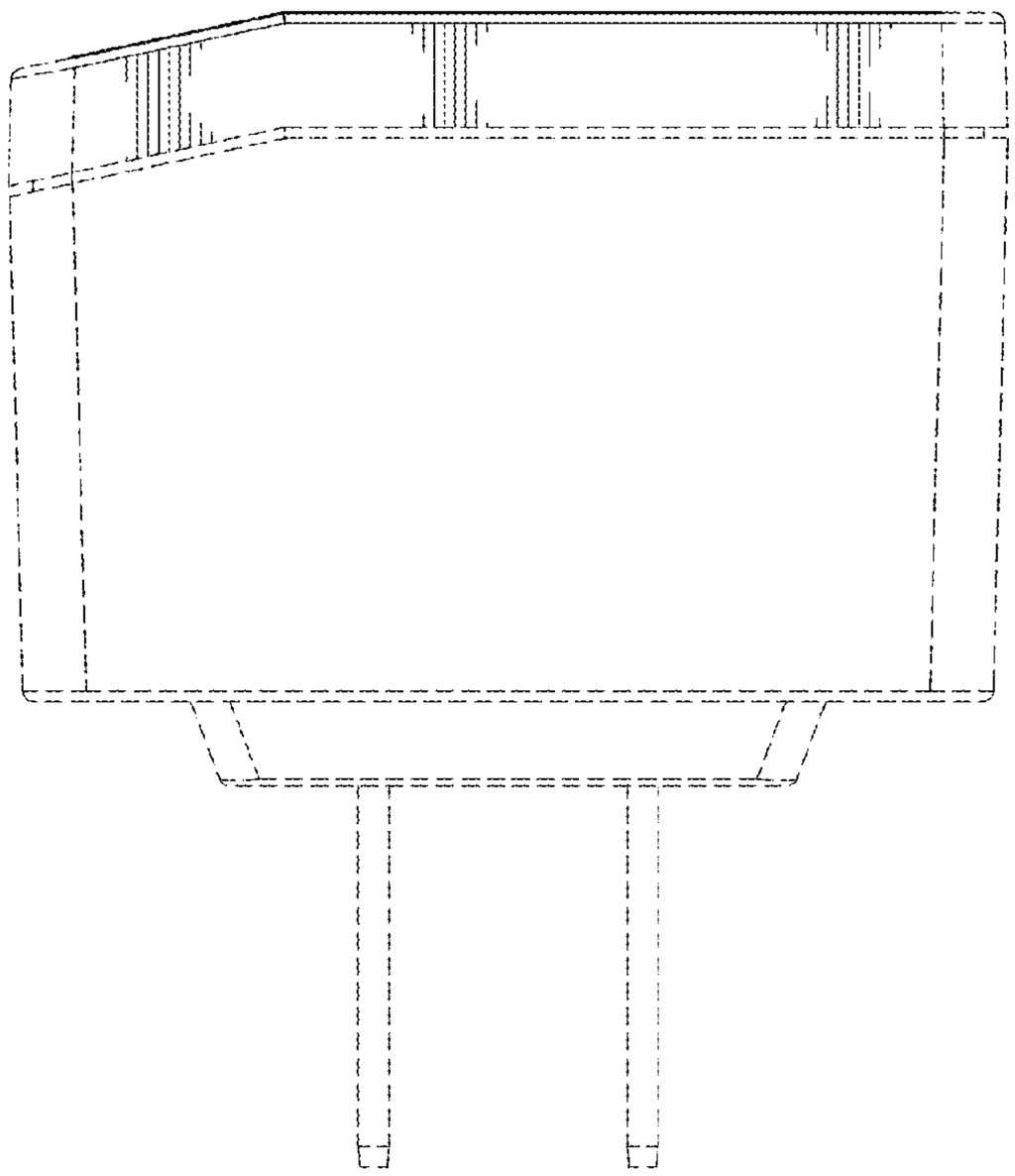

FIG. 6

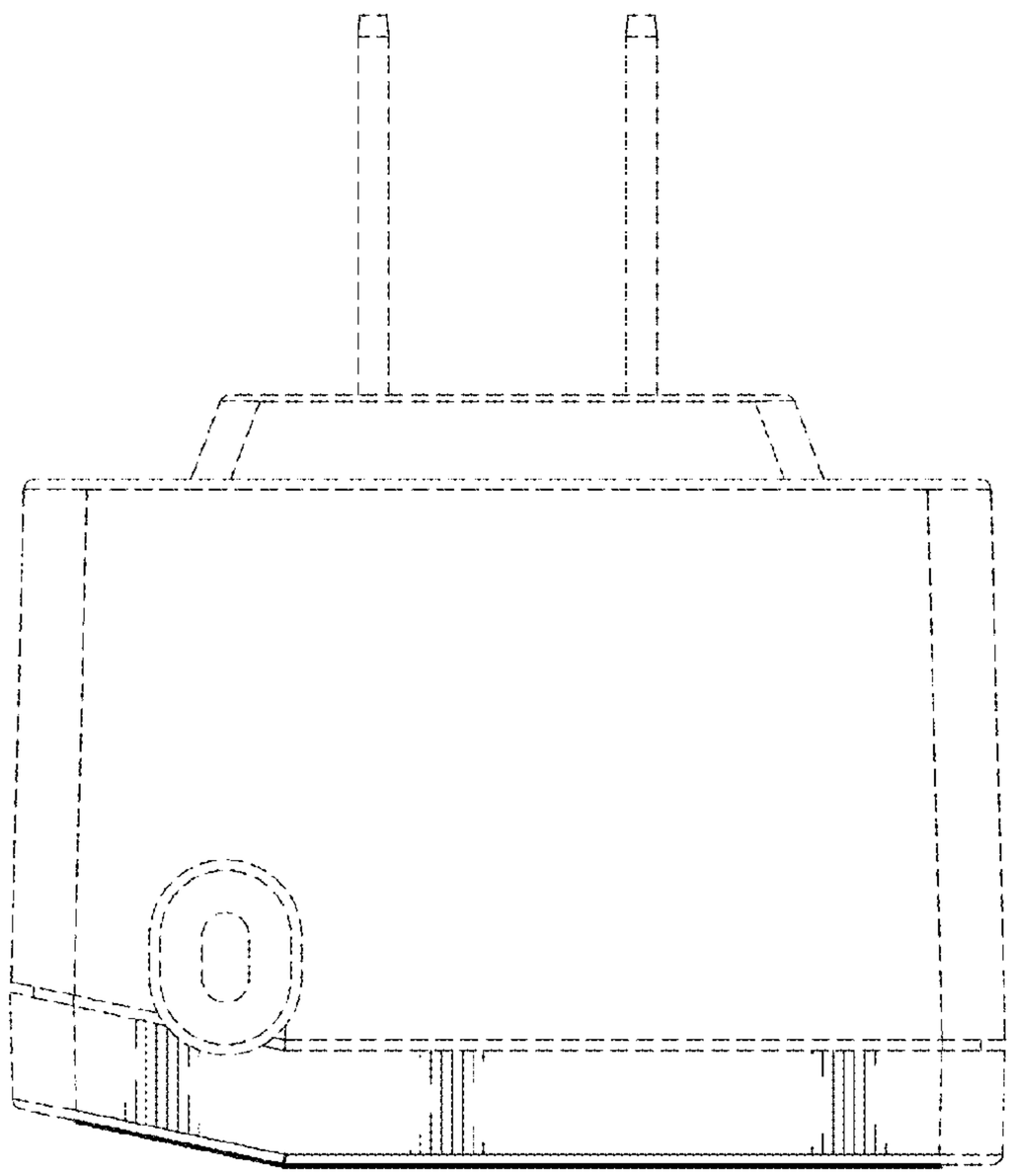

FIG. 7
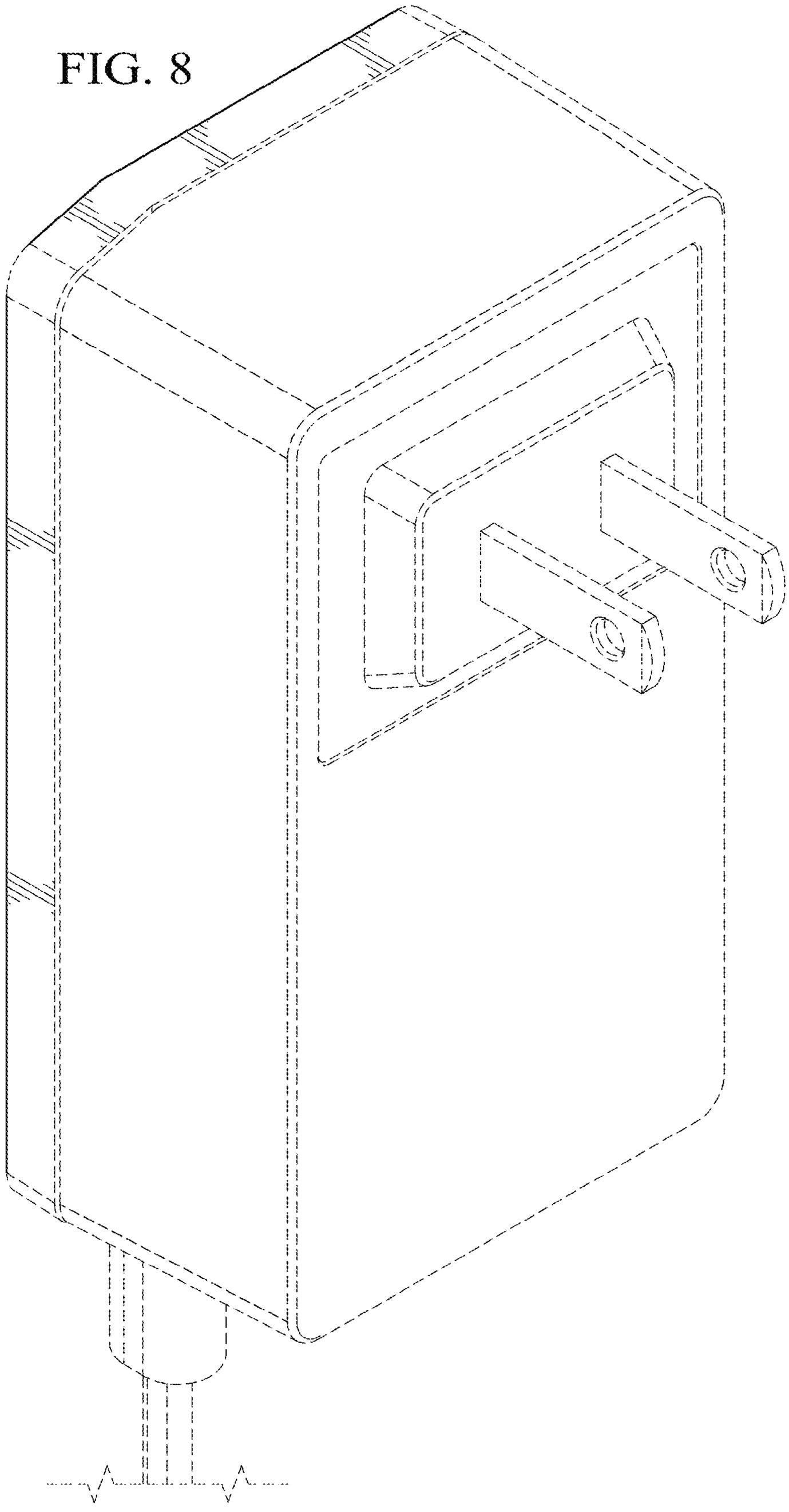
FIG. 8