US00D743915S

(12) United States Design Patent

Sakai et al.

(10) Patent No.: US D743,915 S
(45) Date of Patent: ** Nov. 24, 2015

(54) **REMOTE CONTROLLER FOR AIR CONDITIONER**

(71) Applicants: **Yuki Sakai**, Tokyo (JP); **Takayuki Nishiguchi**, Tokyo (JP)

(72) Inventors: **Yuki Sakai**, Tokyo (JP); **Takayuki Nishiguchi**, Tokyo (JP)

(73) Assignee: **Mitsubishi Electric Corporation**, Tokyo (JP)

(**) Term: **14 Years**

(21) Appl. No.: **29/441,538**

(22) Filed: **Jan. 7, 2013**

(30) **Foreign Application Priority Data**

Jul. 12, 2012 (JP) 2012-016593

(51) **LOC (10) Cl.** **14-03**

(52) **U.S. Cl.**
USPC **D13/168**

(58) **Field of Classification Search**
USPC D13/168; D10/49, 50; D14/218
CPC H03J 1/0025; H03J 9/02; H03J 9/04; H03J 9/06; H01H 9/0235; H04B 1/202; G05B 11/01; G08C 17/00; G08C 17/02; F24F 11/0012; F24F 11/0009; F24F 2011/0068
See application file for complete search history.

(56) **References Cited**

U.S. PATENT DOCUMENTS

5,590,831	A	*	1/1997	Manson et al.	236/51
6,116,512	A	*	9/2000	Dushane et al.	236/51
D621,370	S	*	8/2010	Chouji et al.	D13/168
D648,285	S	*	11/2011	Kashimoto	D13/168
D653,221	S	*	1/2012	Kashimoto	D13/168
D657,754	S	*	4/2012	Kashimoto	D13/168
8,167,216	B2	*	5/2012	Schultz et al.	236/51
D667,797	S	*	9/2012	Saitou	D13/168
D680,973	S	*	4/2013	Nakai	D13/168
D693,778	S	*	11/2013	Sakai et al.	D13/168
D708,588	S	*	7/2014	Ikegaya	D13/168

FOREIGN PATENT DOCUMENTS

AU	338124 S	8/2011
AU	340503 S	1/2012

(Continued)

OTHER PUBLICATIONS

Office Action, dated Oct. 3, 2013, issued by the Federal Service for Intellectual Property of the Russian Federation, in counterpart Application No. 2013500047.

Primary Examiner — Selina Sikder
(74) *Attorney, Agent, or Firm* — Sughrue Mion, PLLC

(57) **CLAIM**

The ornamental design for a remote controller for air conditioner, as shown and described.

DESCRIPTION

FIG. **1** is a perspective view of front, right and top side of a remote controller for air conditioner showing our new design;
FIG. **2** is a front view thereof;
FIG. **3** is a rear view thereof;
FIG. **4** is a right side view thereof, a left side view is a mirror image thereof;
FIG. **5** is a top view thereof;
FIG. **6** is a bottom view thereof;
FIG. **7** is a reference cross sectional end view of cutting part at **7-7** in FIG. **5** omitting the interior mechanism; and,
FIG. **8** is a reference rear view for showing a situation in which a hook is slid.
The portions of the article in broken lines are shown for illustrative purposes only and form no part of the claimed design.

1 Claim, 7 Drawing Sheets

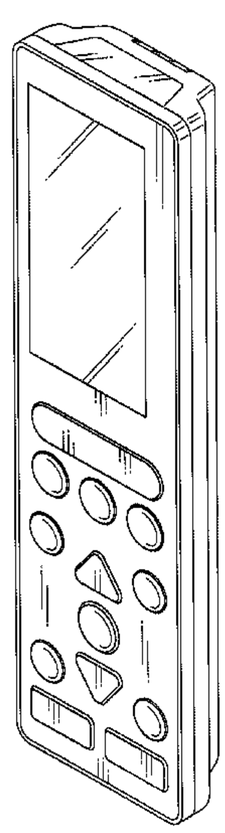

(56) **References Cited**

FOREIGN PATENT DOCUMENTS

DE	M8906984	11/1990
FR	932833-001	11/1993
JP	1311901 S	10/2007
JP	1324288 S	3/2008
JP	1336895 S	8/2008
JP	1400597 S	11/2010

* cited by examiner

Fig. 1

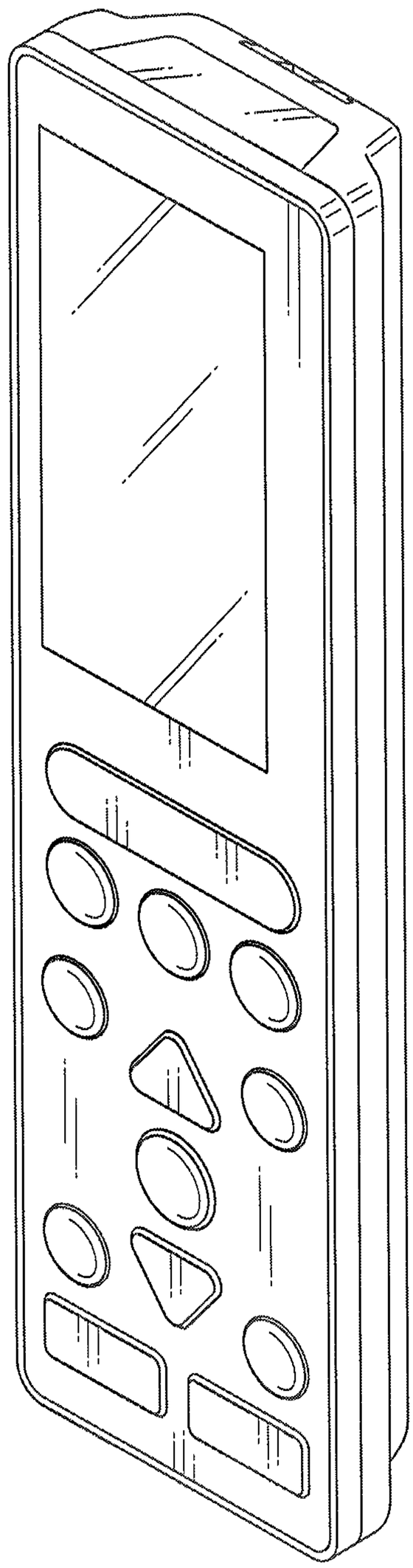

Fig. 2

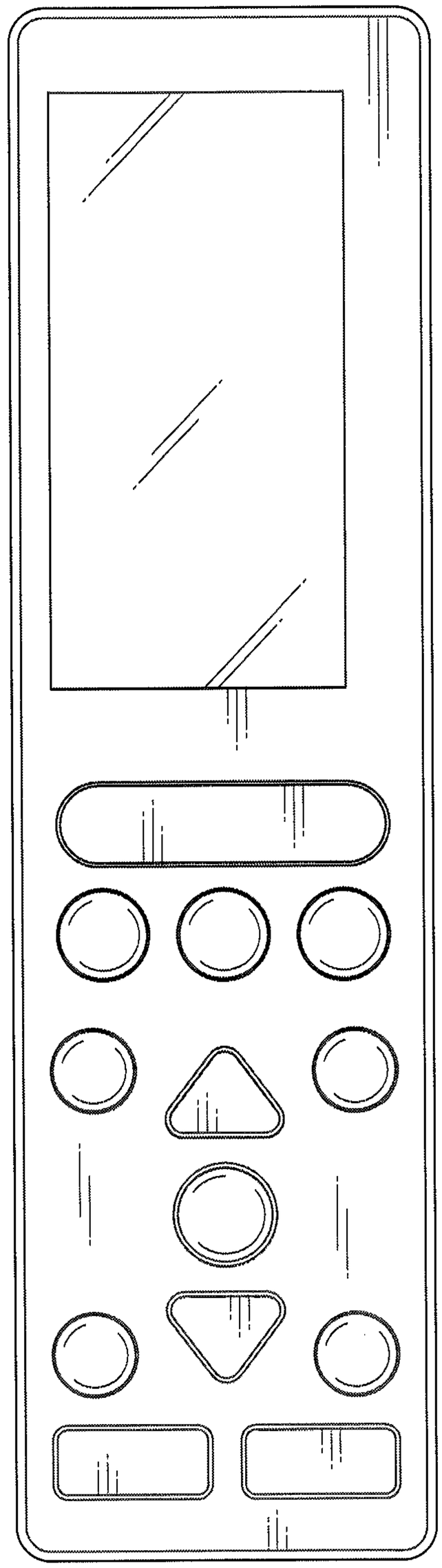

Fig. 3

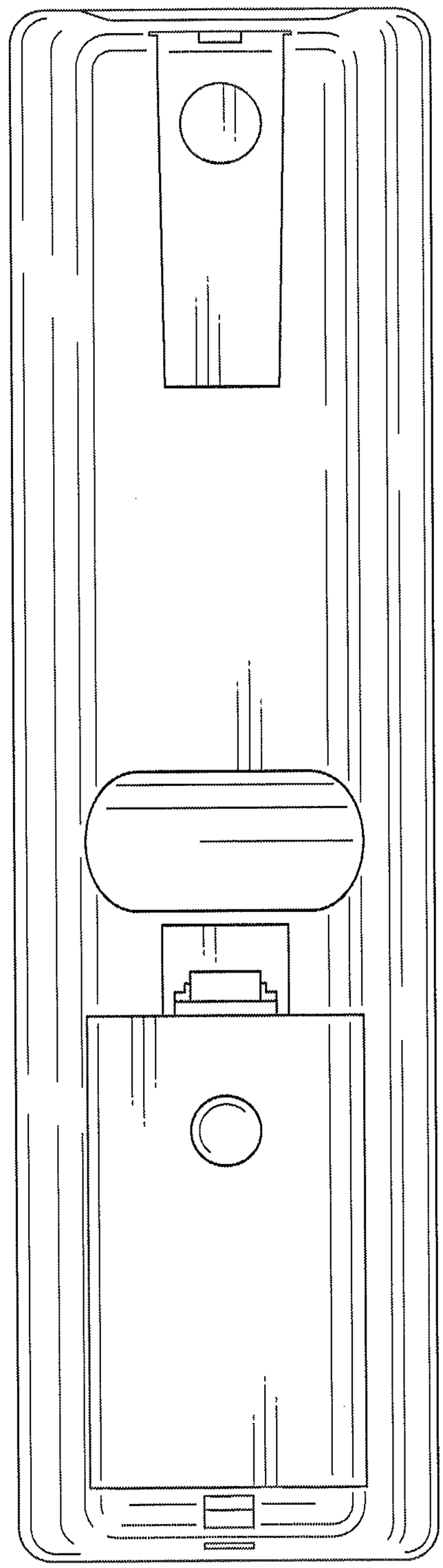

Fig. 4

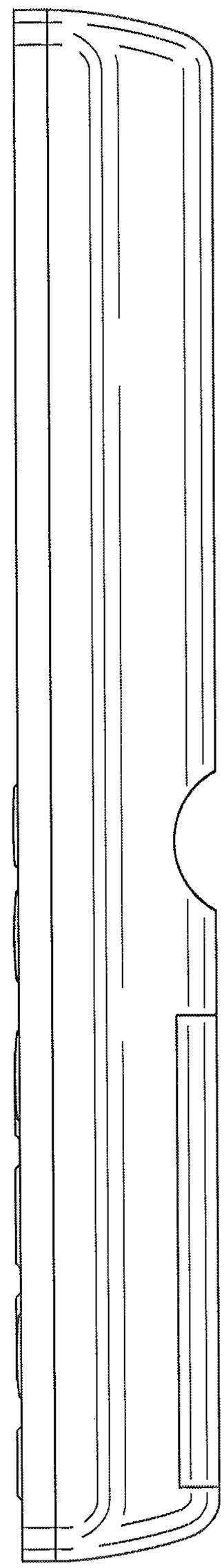

Fig. 5

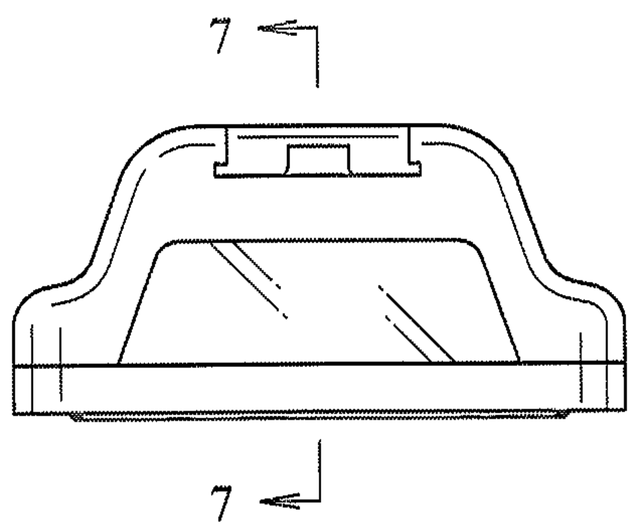

Fig. 6

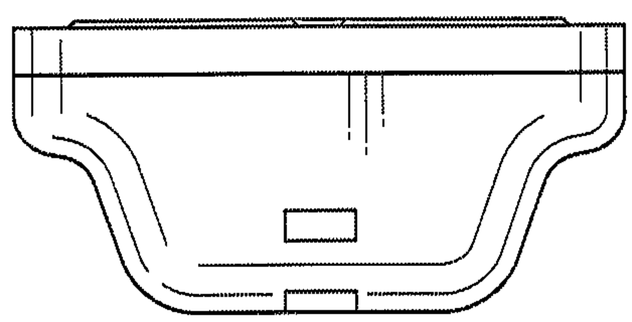

Fig. 7

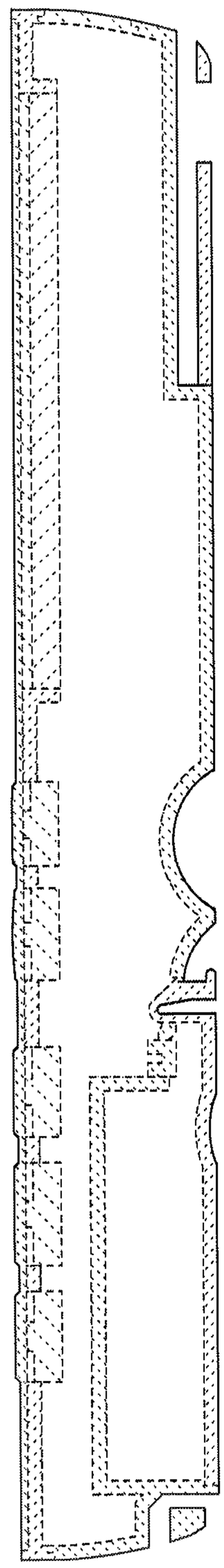
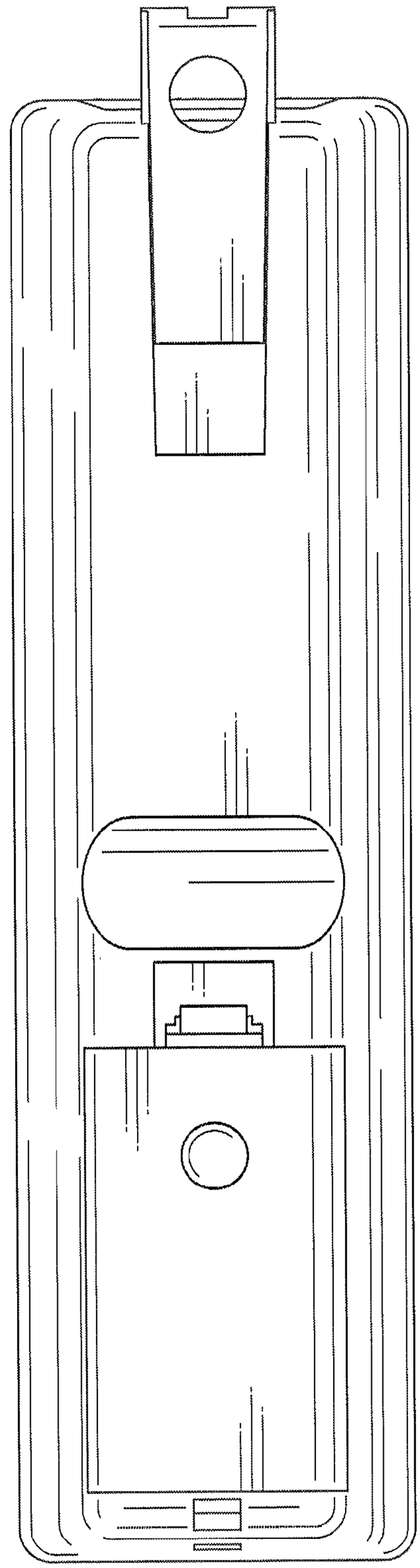
Fig. 8