US00D743614S

(12) United States Design Patent
Ng

(10) Patent No.: US D743,614 S
(45) Date of Patent: ** Nov. 17, 2015

(54) **LAMP**

(71) Applicant: **Koncept Technologies Inc.**, Monrovia, CA (US)

(72) Inventor: **Hon Kit Peter Ng**, Hong Kong (CN)

(73) Assignee: **Koncept Technologies Inc.**, Monrovia, CA (US)

(**) Term: **14 Years**

(21) Appl. No.: **29/472,015**

(22) Filed: **Nov. 7, 2013**

(51) **LOC (10) Cl.** **26-03**

(52) **U.S. Cl.**
USPC **D26/107**

(58) **Field of Classification Search**
USPC D26/60, 61, 63, 65, 67, 93, 99, 107; 362/419, 427
CPC ... F21V 21/088; F21V 21/0885; F21V 21/30; F21S 6/003
See application file for complete search history.

(56) **References Cited**

U.S. PATENT DOCUMENTS

D122,711	S	*	9/1940	May	D26/63
D303,580	S	*	9/1989	Kyricos	D26/65
D382,076	S	*	8/1997	Chan	D26/65
D423,130	S	*	4/2000	Kung	D26/60
D542,955	S	*	5/2007	Hodgson	D26/60
D620,165	S	*	7/2010	Huang	D26/63
D622,885	S	*	8/2010	Ng et al.	D26/65
D623,788	S	*	9/2010	Huang	D26/65
D635,707	S	*	4/2011	Ng et al.	D26/65
D662,639	S	*	6/2012	Ng et al.	D26/65
D662,640	S	*	6/2012	Ng et al.	D26/65
D690,045	S	*	9/2013	Ng et al.	D26/65
D690,860	S	*	10/2013	Citterio	D26/65
D690,861	S	*	10/2013	Huang	D26/65
D703,359	S	*	4/2014	Thomas et al.	D26/63

* cited by examiner

Primary Examiner — Clare E Heflin
(74) *Attorney, Agent, or Firm* — Foley & Lardner LLP

(57) **CLAIM**

We claim the ornamental design for a lamp, as shown and described.

DESCRIPTION

FIG. **1** is a perspective view of a lamp showing our new design;
FIG. **2** is a left view thereof;
FIG. **3** is a right view thereof;
FIG. **4** is a front view thereof;
FIG. **5** is a rear view thereof
FIG. **6** is a top view thereof; and,
FIG. **7** is a bottom view thereof.

The ornamental design which is claimed is shown in solid lines in the drawings. The broken lines in the drawings represent portions of the lamp that form no part of the claimed design. Elements of the lamp have been broken away in all of the figures to indicate that no particular length is claimed, it being understood that the design repeats uniformly throughout its length.

1 Claim, 7 Drawing Sheets

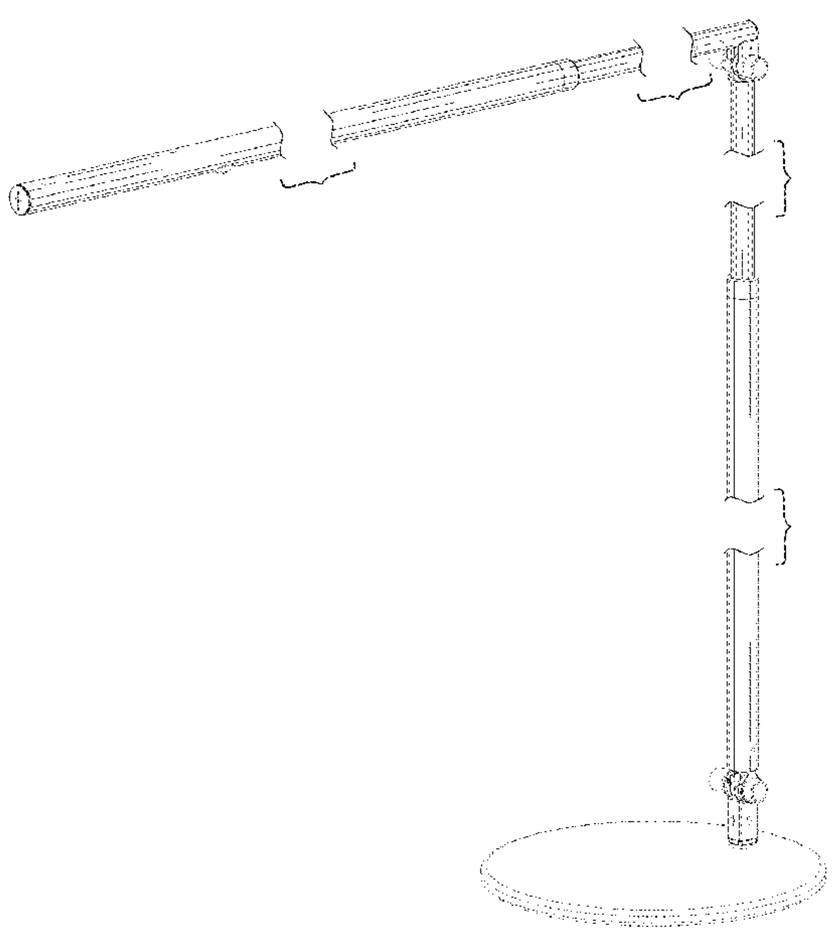

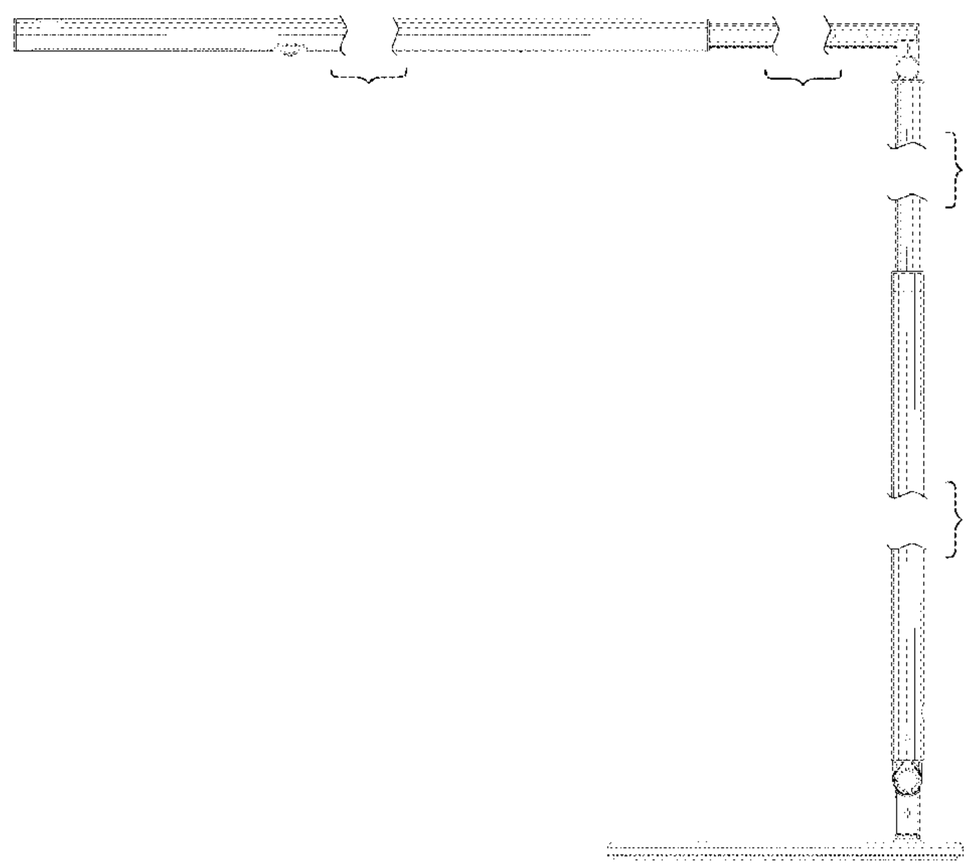

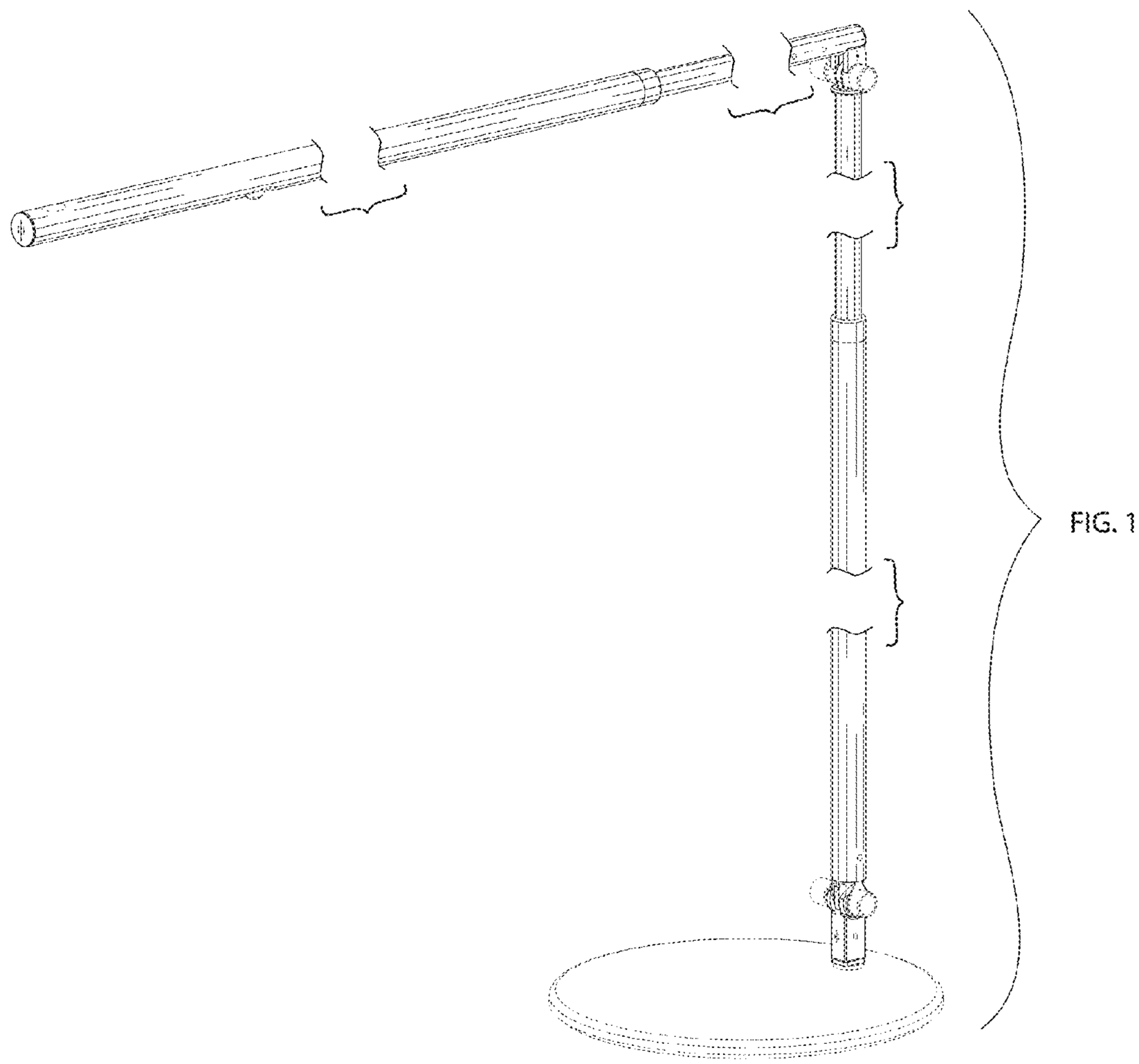

FIG. 1

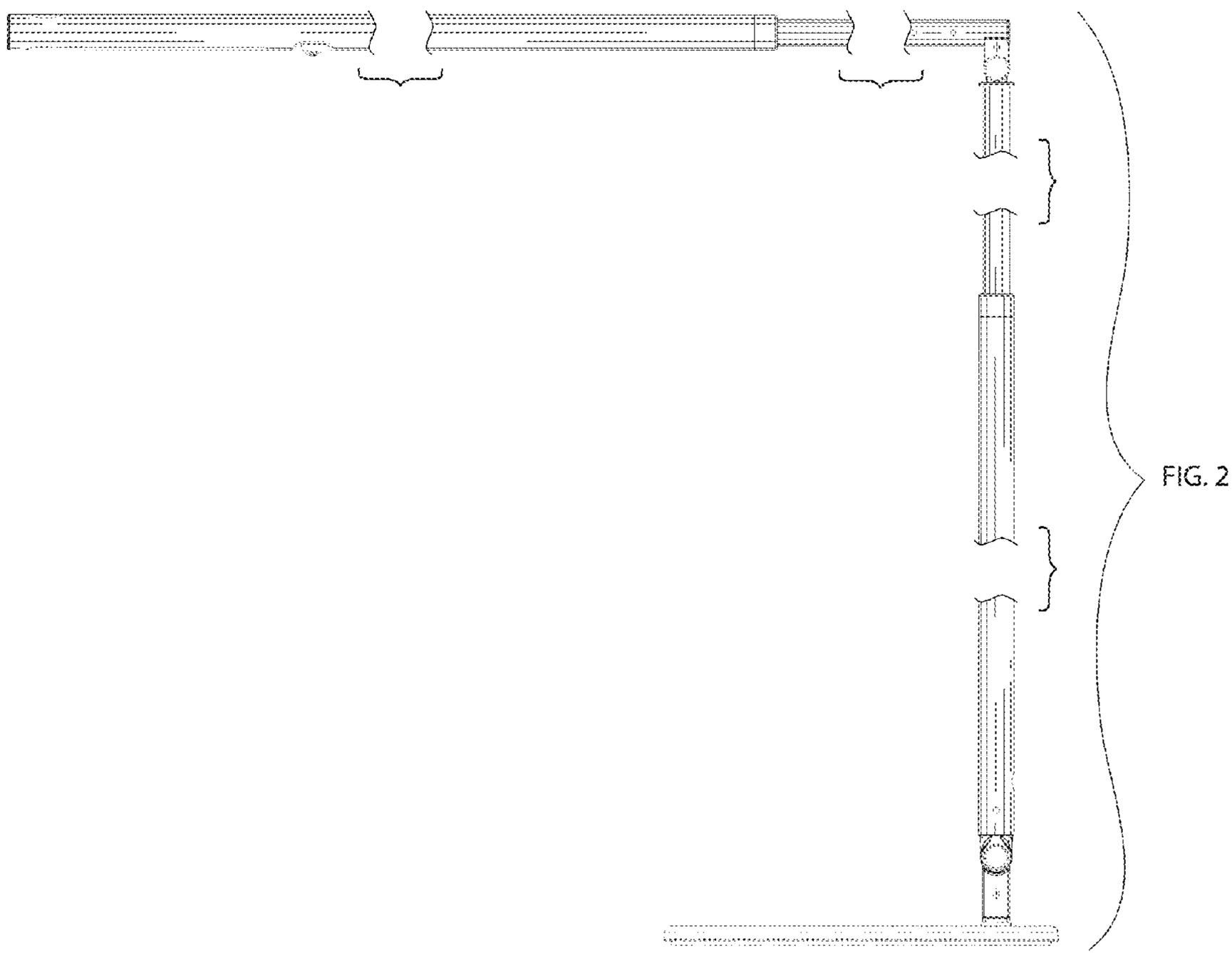
FIG. 2

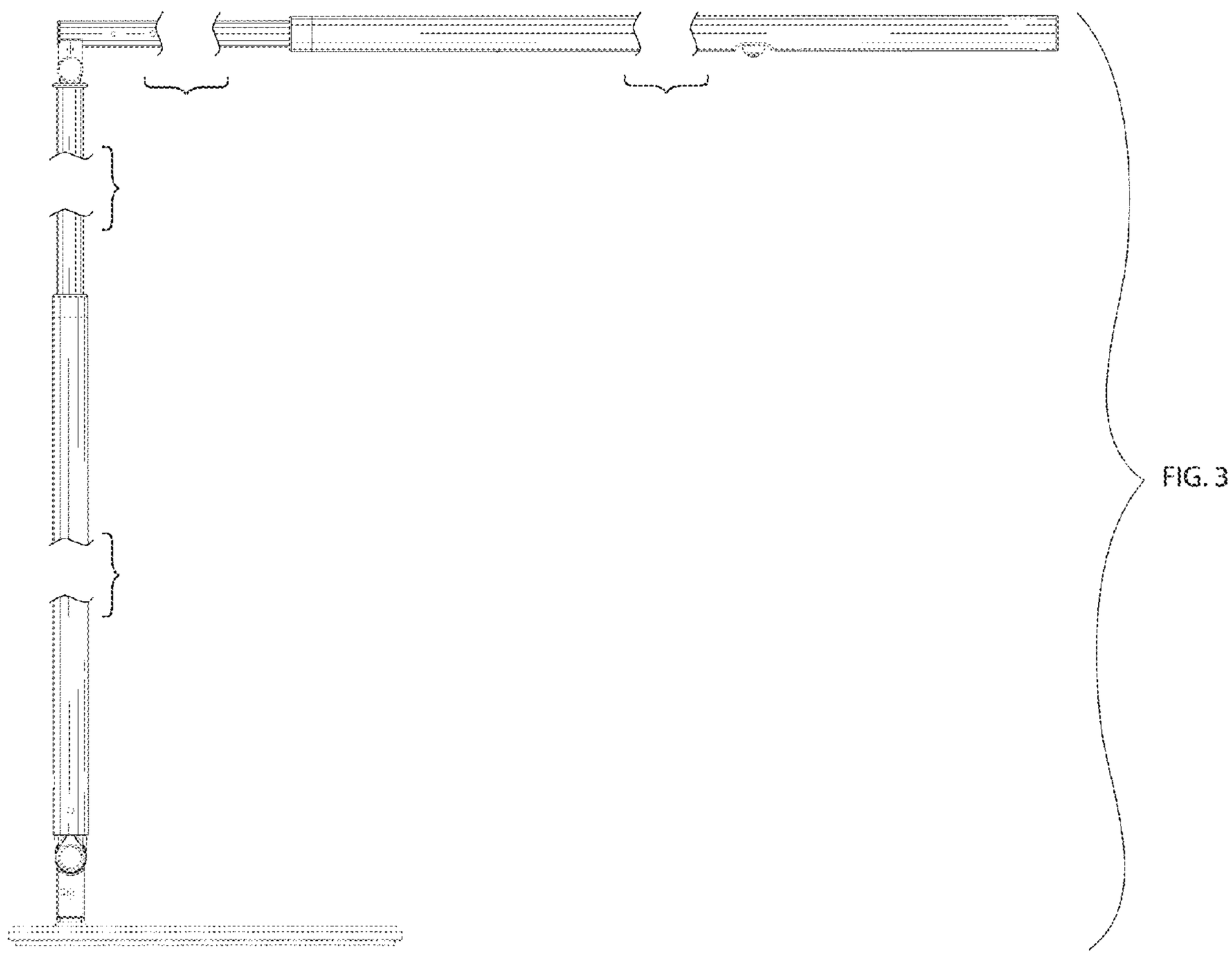

FIG. 3

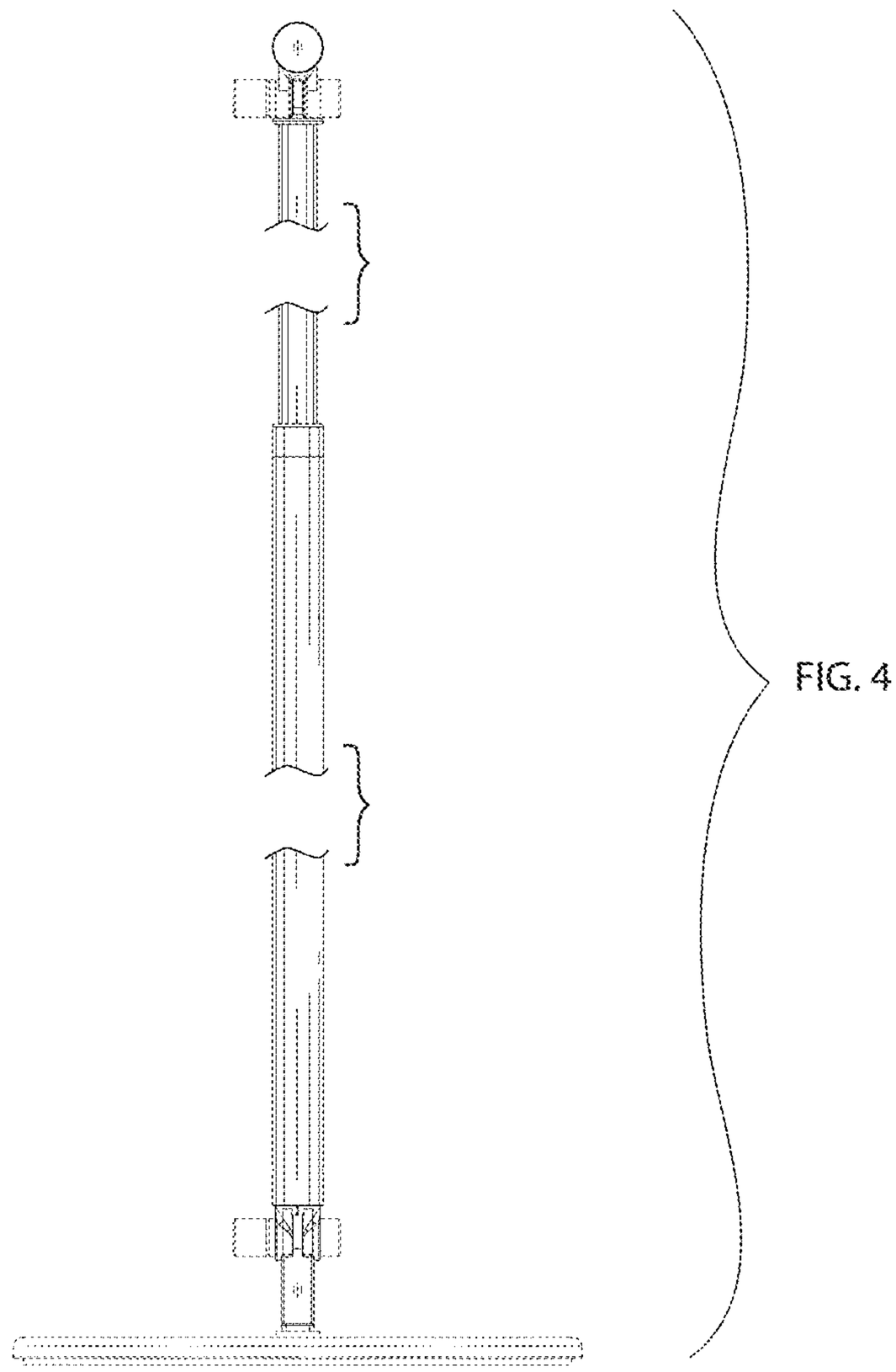

FIG. 4

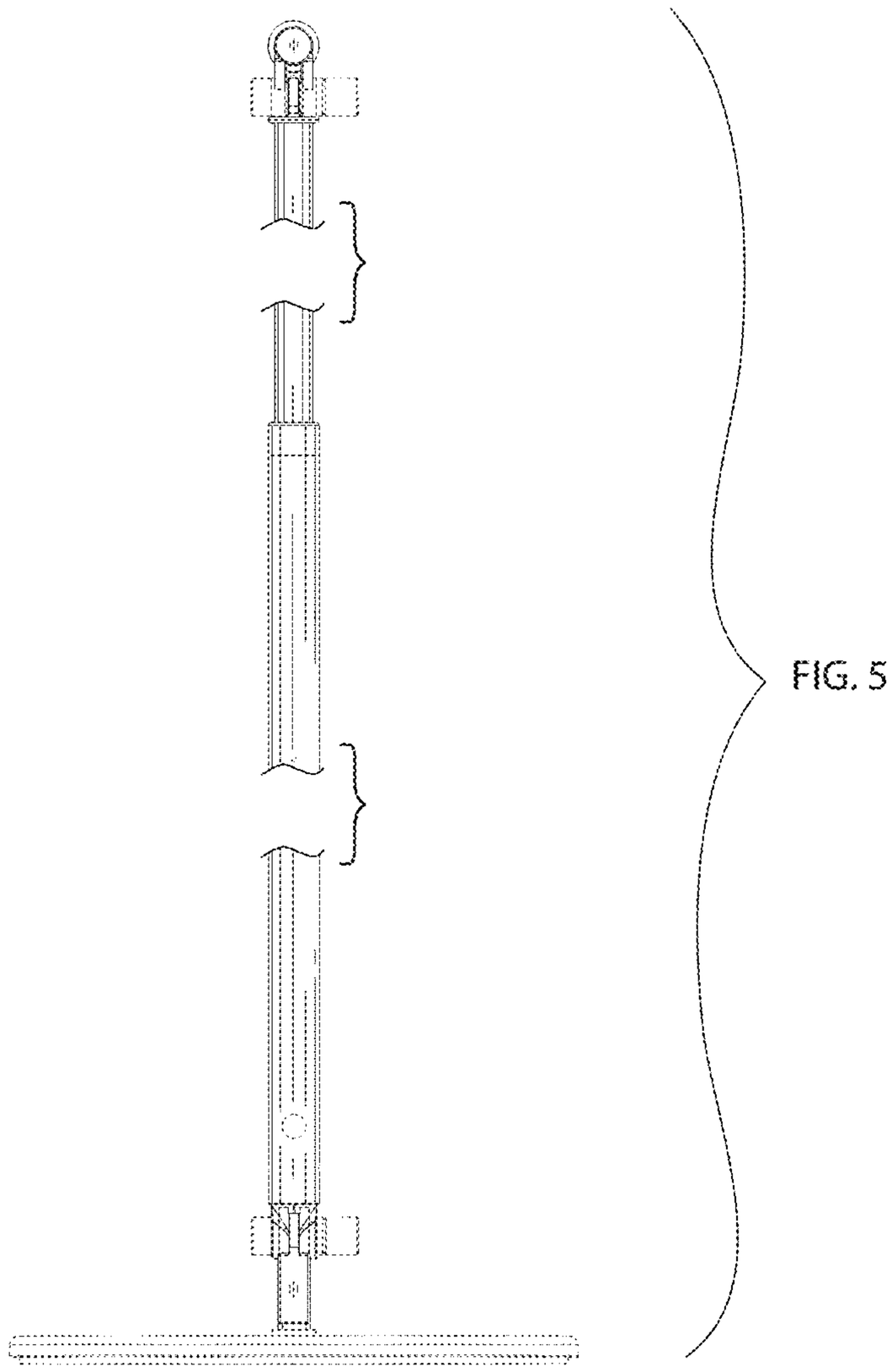

FIG. 5

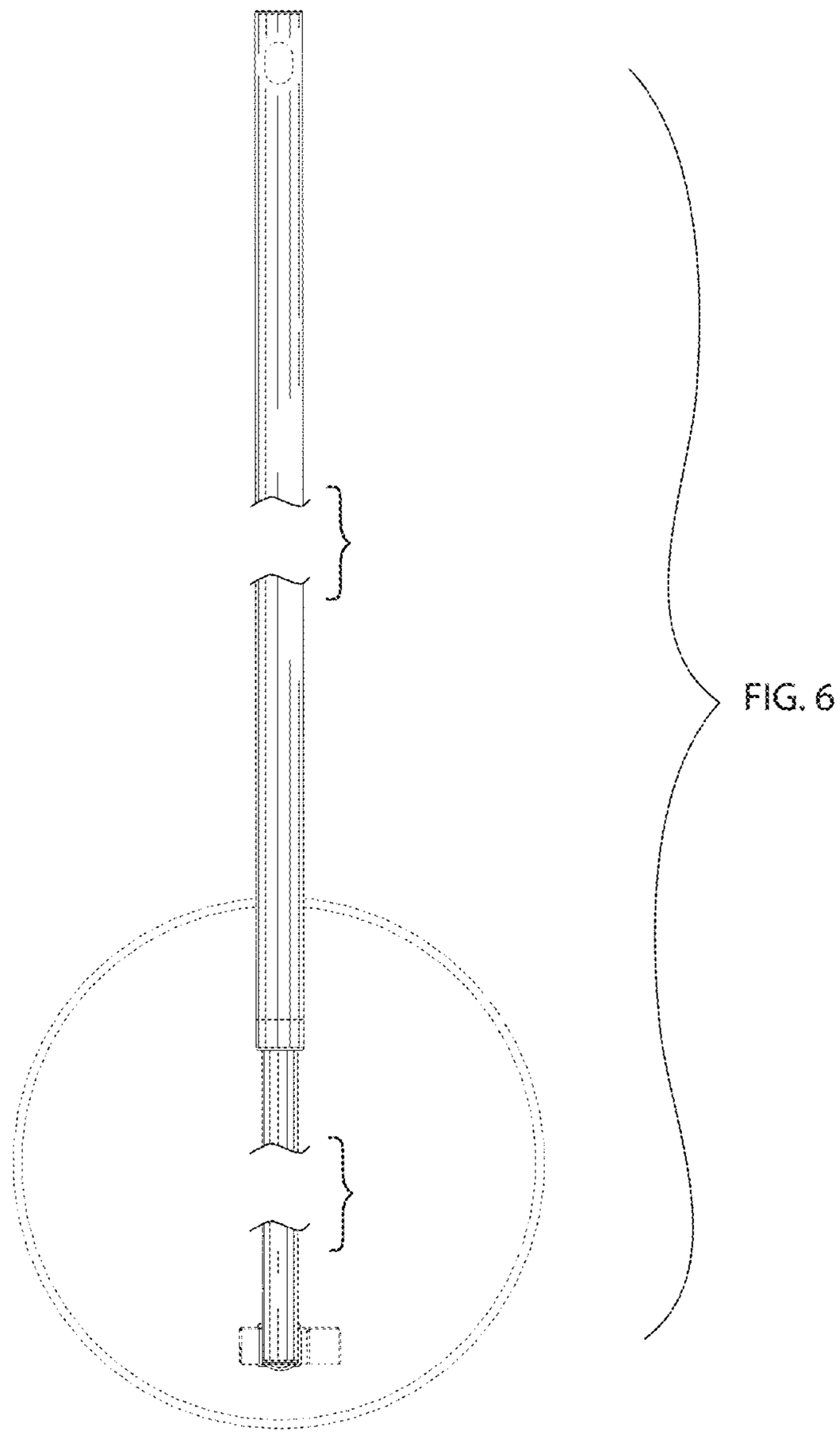

FIG. 6

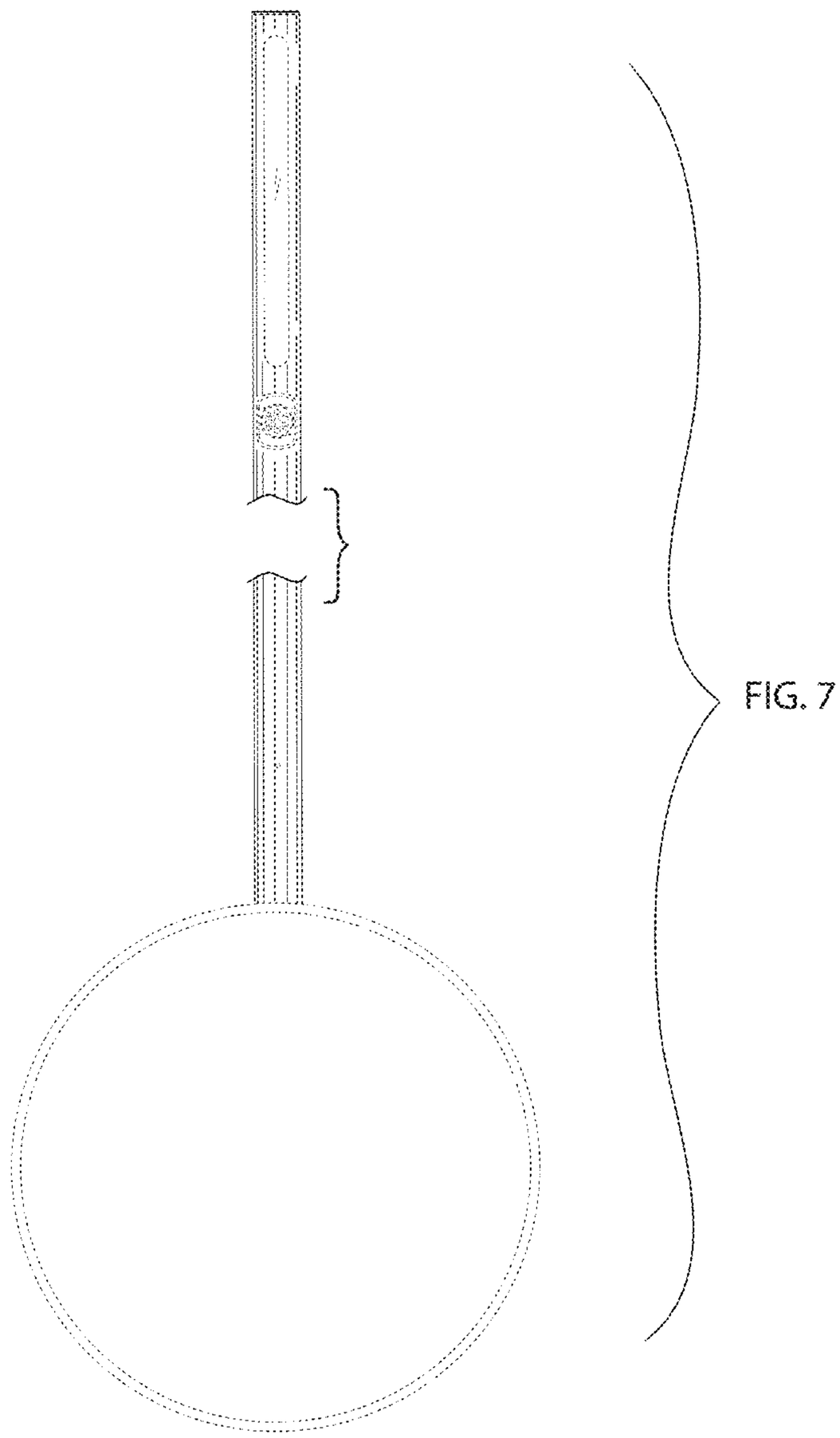

FIG. 7