US00D742736S

(12) United States Design Patent

Snedden et al.

(10) Patent No.: US D742,736 S
(45) Date of Patent: ** Nov. 10, 2015

(54) **TRAY ASSEMBLY**

(71) Applicant: **Direct Pack, Inc.**, Sun Valley, CA (US)

(72) Inventors: **Craig R. Snedden**, La Canada Flintridge, CA (US); **Gandhi B. Sifuentes**, West Covina, CA (US); **Leonardo Magana**, San Bernardino, CA (US); **Patrick Jude Nunan**, Alamo, CA (US)

(73) Assignee: **DIRECT PACK, INC.**, Azusa, CA (US)

(**) Term: **14 Years**

(21) Appl. No.: **29/501,829**

(22) Filed: **Sep. 9, 2014**

(51) **LOC (10) Cl.** **09-03**

(52) **U.S. Cl.**
USPC **D9/418**

(58) **Field of Classification Search**
USPC D9/414–418, 420, 425, 426, 432, 429, D9/435, 761; 220/792, 4.23, 839, 810; D7/354; D11/155
CPC B65D 2543/00537; B65D 43/162; A47J 36/06
See application file for complete search history.

(56) **References Cited**

U.S. PATENT DOCUMENTS

4,976,370	A	*	12/1990	Cassel	220/792
5,258,212	A	*	11/1993	Tomaru et al.	428/36.8
5,515,993	A	*	5/1996	McManus	220/4.23
D427,482	S	*	7/2000	Mittmann	D7/354
D431,148	S	*	9/2000	Mittmann	D7/354
D435,390	S	*	12/2000	Mittmann	D7/354
D443,173	S	*	6/2001	Danielsen et al.	D7/354
D552,467	S	*	10/2007	Templeton	D9/420
D628,475	S	*	12/2010	Snedden et al.	D9/426
D668,536	S	*	10/2012	Sanfilippo	D9/425
D684,466	S	*	6/2013	Wichmann	D9/432
D689,363	S	*	9/2013	Sundy et al.	D9/429
D708,942	S	*	7/2014	Snedden et al.	D9/435
D727,791	S	*	4/2015	Montagano	D11/155
D728,383	S	*	5/2015	Sifuentes et al.	D9/761
2006/0081641	A1	*	4/2006	Habeger et al.	220/839
2010/0102074	A1	*	4/2010	Parikh et al.	220/810

* cited by examiner

Primary Examiner — Holly Baynham
Assistant Examiner — Rhea Shields
(74) *Attorney, Agent, or Firm* — Frost Brown Todd LLC

(57) **CLAIM**

The ornamental design for a tray assembly, as shown and described.

DESCRIPTION

FIG. **1** is a top perspective exploded view of a tray assembly revealing the top side of the lid, tray and base, and showing our new design;
FIG. **2** is a left elevational view thereof;
FIG. **3** is a right elevational view thereof;
FIG. **4** is a front elevational view thereof;
FIG. **5** is a back elevational view thereof;
FIG. **6** is a top plan view thereof; and,
FIG. **7** is a bottom plan view thereof.
In the drawings, the broken lines are for the purpose of illustrating environment only and form no part of the claimed design.

1 Claim, 4 Drawing Sheets

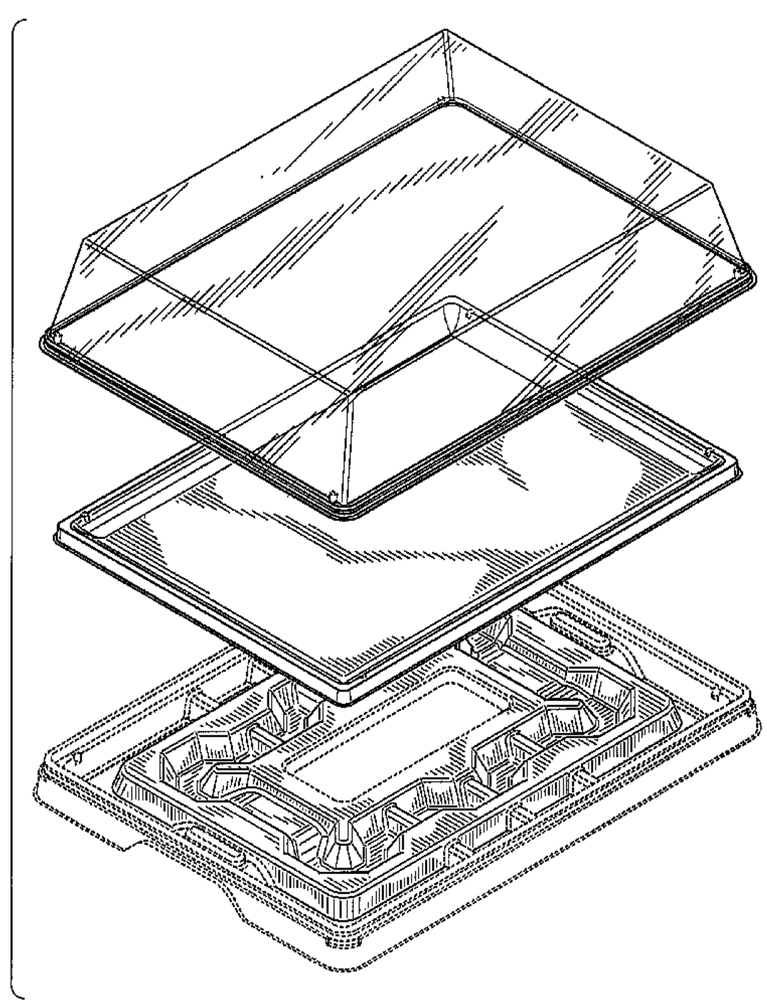

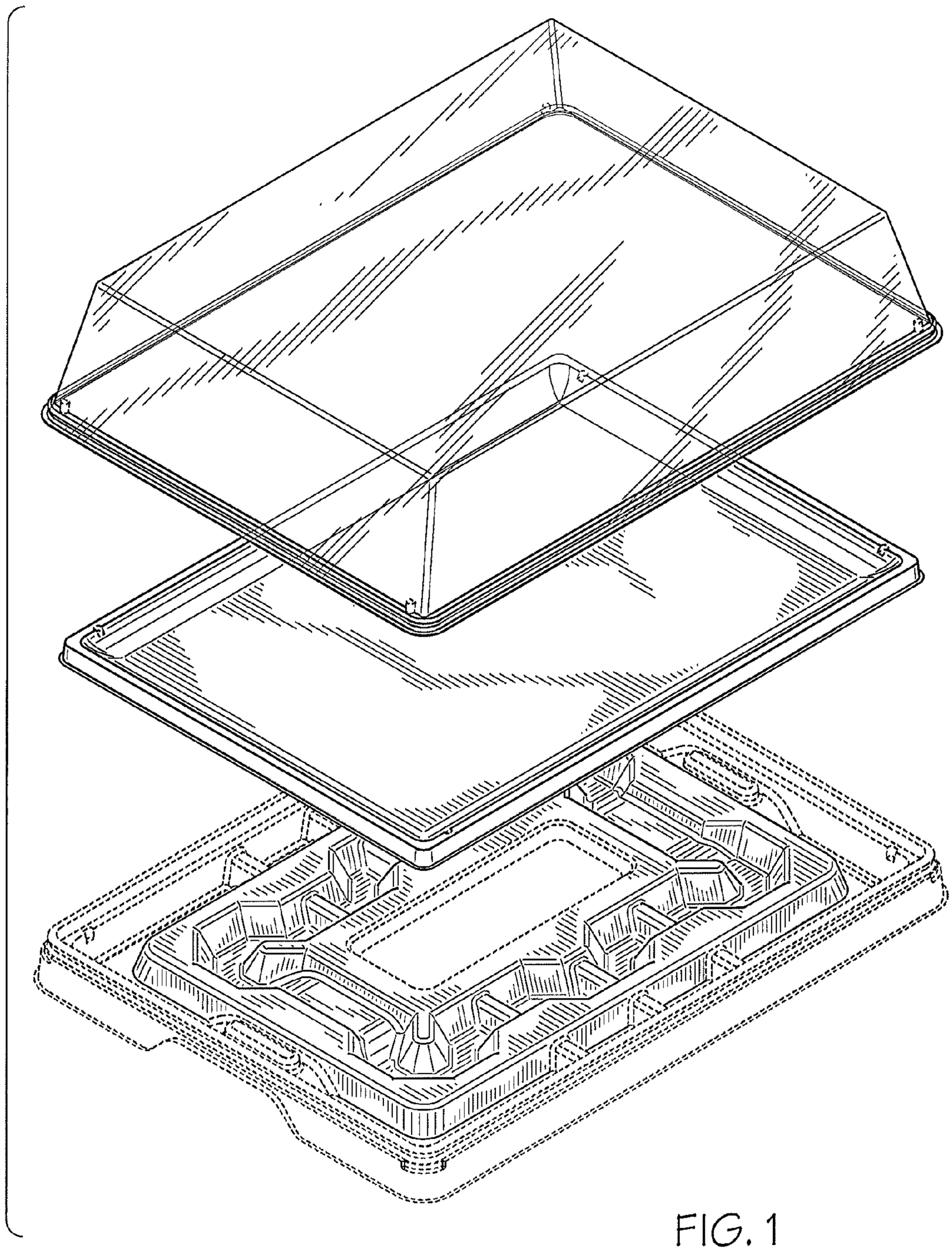

FIG. 1

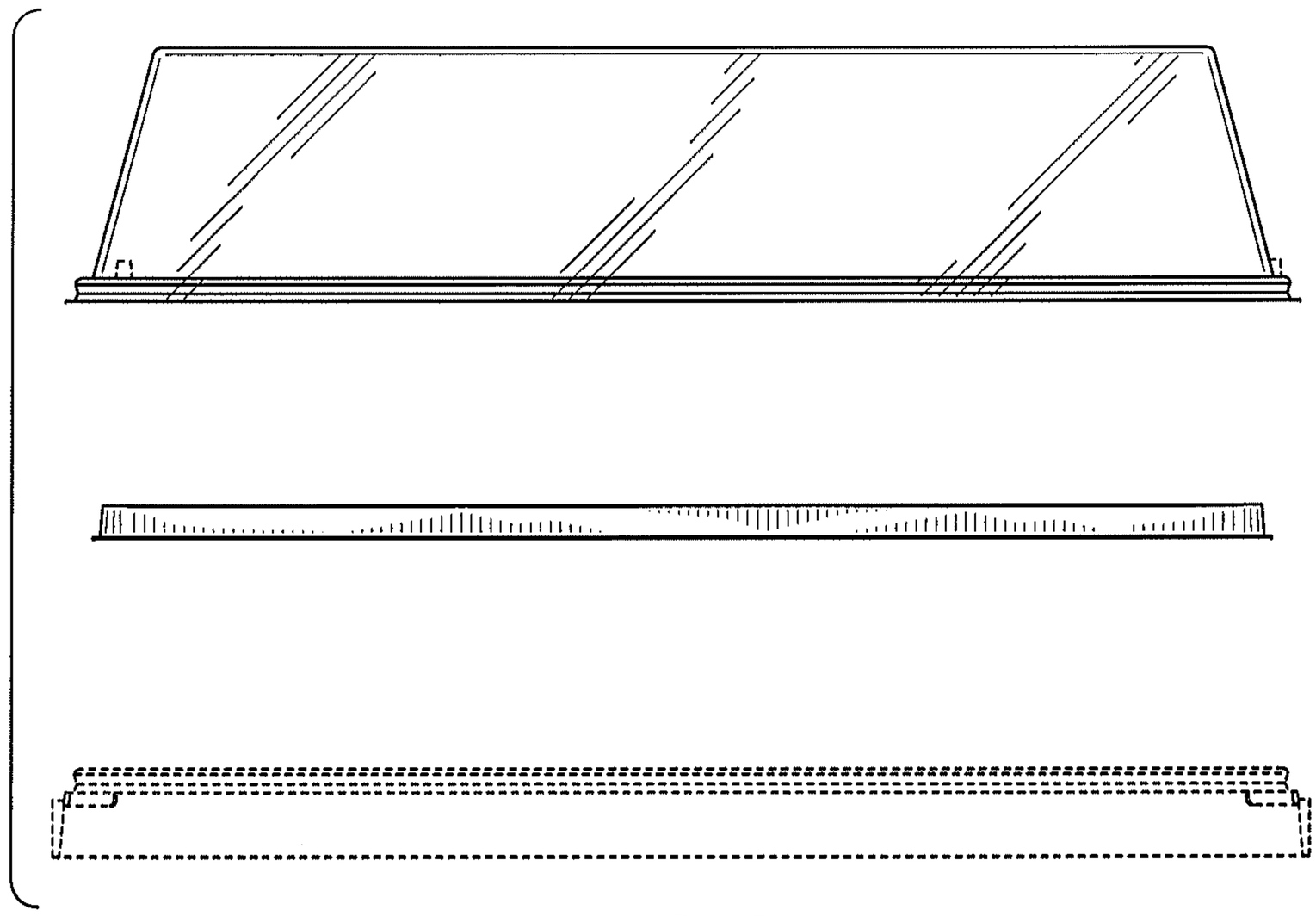

FIG. 2

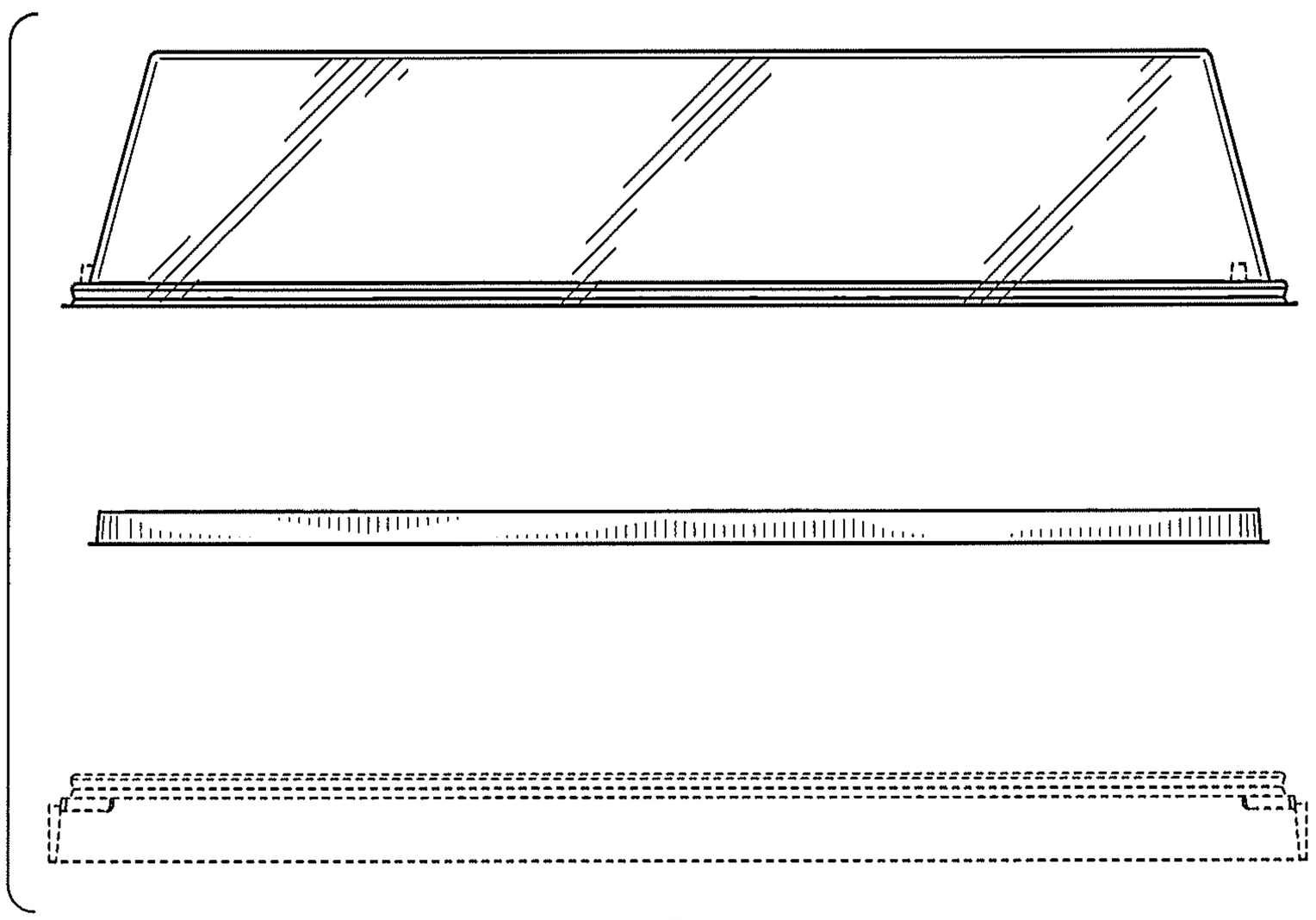

FIG. 3

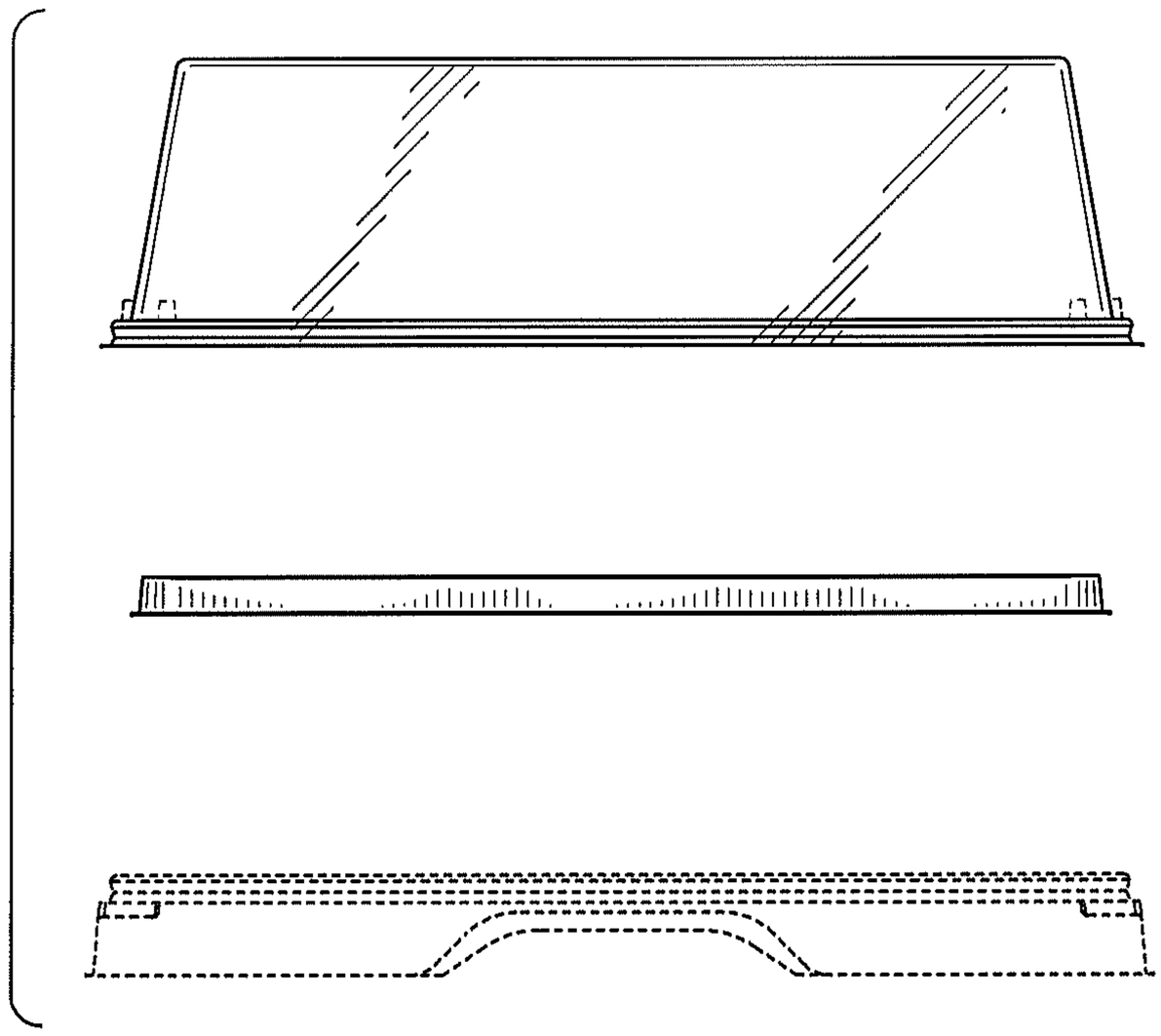

FIG. 4

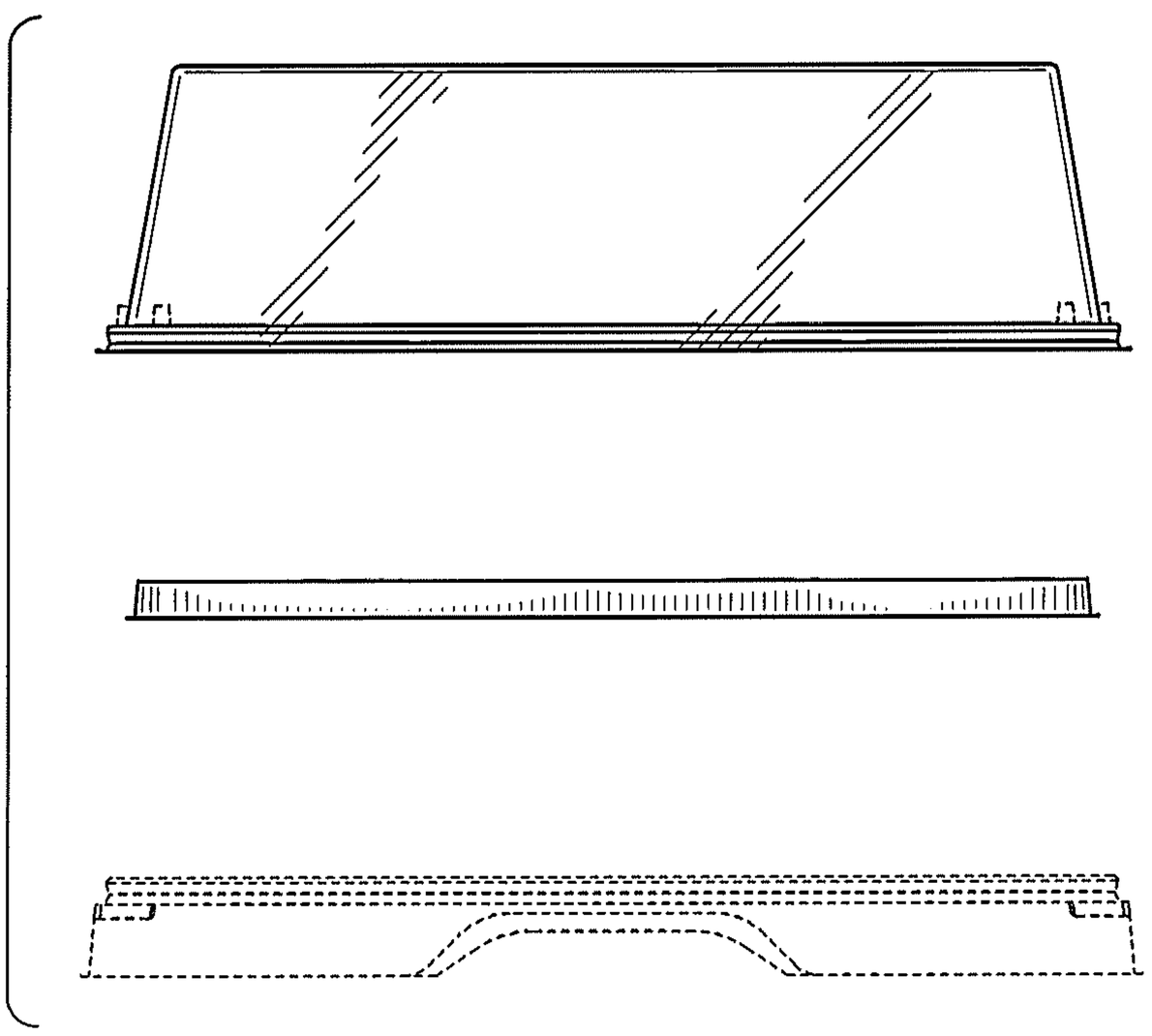

FIG. 5

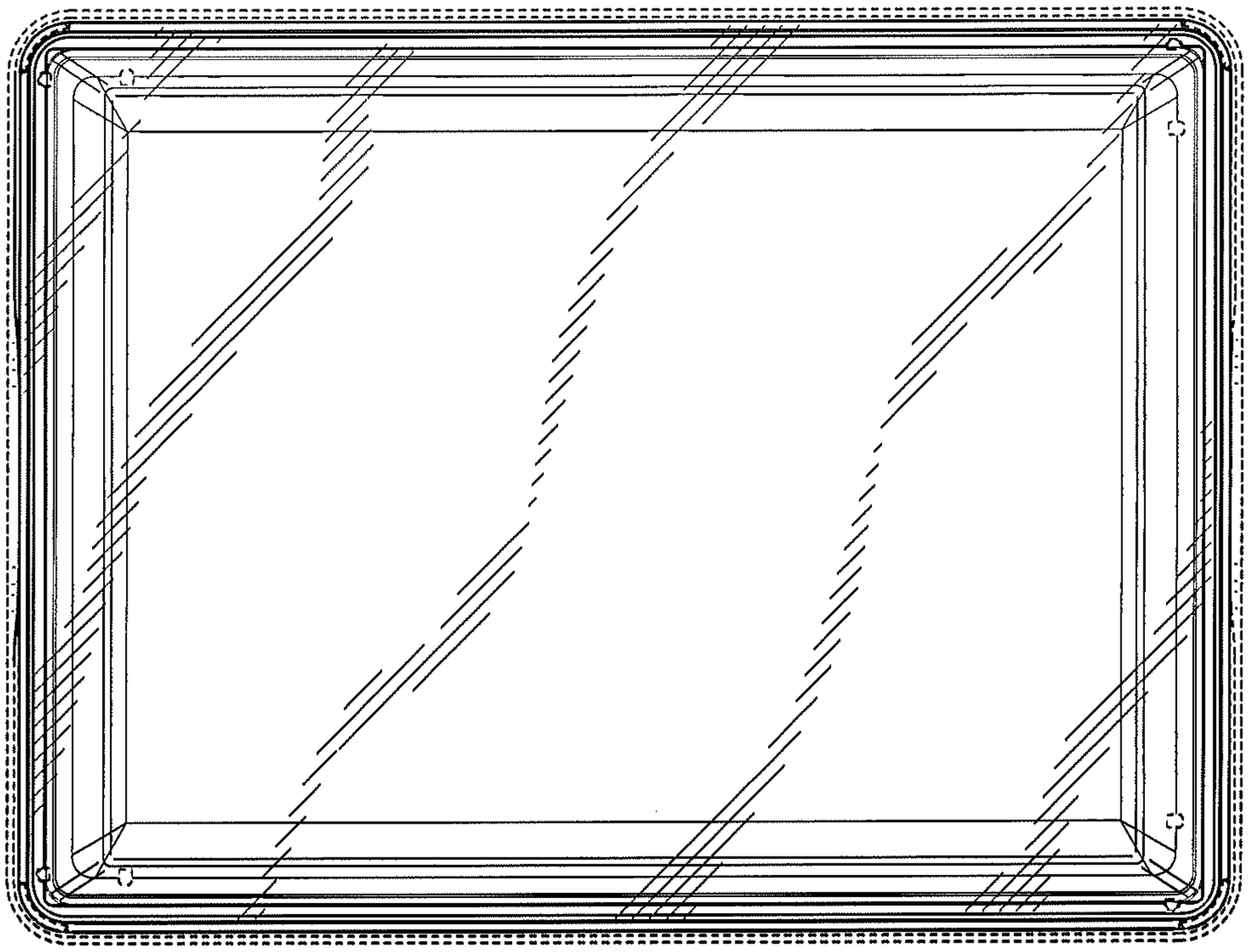

FIG. 6

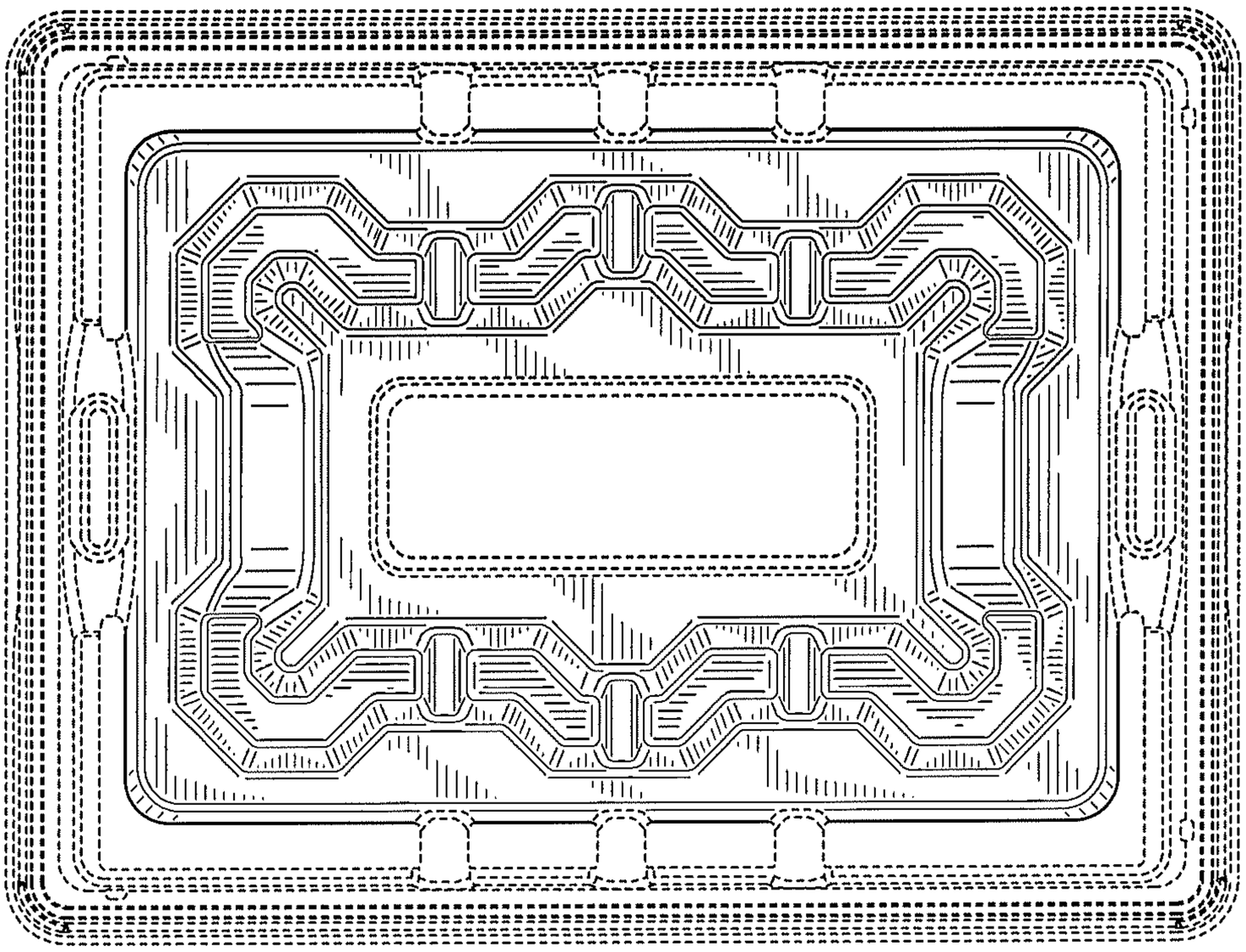

FIG. 7