US00D742602S

(12) United States Design Patent
Kim

(10) Patent No.: US D742,602 S
(45) Date of Patent: ** Nov. 3, 2015

(54) **WASHING MACHINE**

(71) Applicant: **Samsung Electronics Co., Ltd.**, Suwon-si (KR)

(72) Inventor: **Kang-Doo Kim**, Seoul (KR)

(73) Assignee: **Samsung Electronics Co., Ltd.**, Suwon-si (KR)

(**) Term: **14 Years**

(21) Appl. No.: **29/483,143**

(22) Filed: **Feb. 26, 2014**

(30) **Foreign Application Priority Data**

Sep. 2, 2013 (KR) 30-2013-0045140

(51) **LOC (10) Cl.** **15-05**

(52) **U.S. Cl.**
USPC **D32/6**

(58) **Field of Classification Search**
USPC D32/1, 25, 29, 5–6, 8
CPC D06F 58/00; D06F 58/02; D06F 58/04; D06F 58/20; D06F 33/02; D06F 39/02; D06F 2204/065; D06F 25/00; D06F 35/006
See application file for complete search history.

(56) **References Cited**

U.S. PATENT DOCUMENTS

D642,753	S *	8/2011	Ha	D32/6
8,056,172	B2 *	11/2011	Schneider et al.	8/159
D653,006	S *	1/2012	Takahashi	D32/6
D658,340	S *	4/2012	Jeon et al.	D32/6
8,555,676	B2 *	10/2013	Beck et al.	68/3 R
D697,276	S *	1/2014	Yeol et al.	D32/25
D698,109	S *	1/2014	Yeol et al.	D32/25
D699,905	S *	2/2014	Yeol et al.	D32/25
D705,505	S *	5/2014	Ha et al.	D32/25
2013/0014546	A1 *	1/2013	Kobayashi et al.	68/212

FOREIGN PATENT DOCUMENTS

JP	1377367	1/2010
JP	1437757	4/2013
KR	30-0441662 S	2/2007
RU	82090 S	6/2012
RU	85274 S	5/2013

OTHER PUBLICATIONS

Russian Office Action issued with respect to corresponding Russian Application No. 2014500811, mailed Nov. 21, 2014 (6 pages, in English and Russian).

* cited by examiner

Primary Examiner — T. Chase Nelson
Assistant Examiner — Michelle E Wilson
(74) *Attorney, Agent, or Firm* — NSIP Law

(57) **CLAIM**

I claim the ornamental design for a washing machine, as shown and described.

DESCRIPTION

FIG. **1** is a front perspective view of a washing machine showing my new design;
FIG. **2** is a front view thereof;
FIG. **3** is a rear view thereof;
FIG. **4** is a left-side view thereof;
FIG. **5** is a right-side view thereof;
FIG. **6** is a top view thereof;
FIG. **7** is a bottom view thereof;
FIG. **8** is an enlarged cross-sectional view taken through line **8-8** of FIG. **4**; and,
FIG. **9** is an enlarged cross-sectional view taken through line **9-9** of FIG. **4**.
The broken lines in the figures show portions of the washing machine which form no part of the claimed design.
The dot-dash broken lines encircling portions of the claimed design that are illustrated in enlargements form no part of the claimed design.

1 Claim, 9 Drawing Sheets

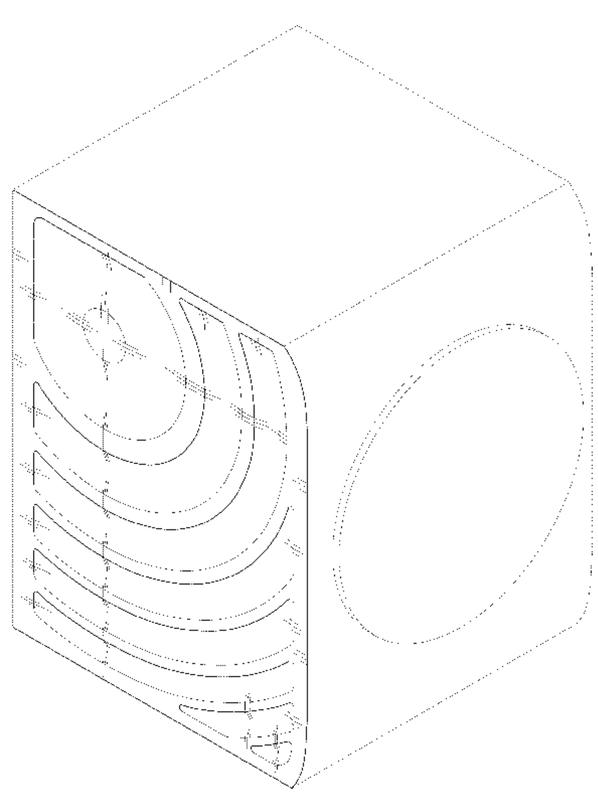

FIG. 1

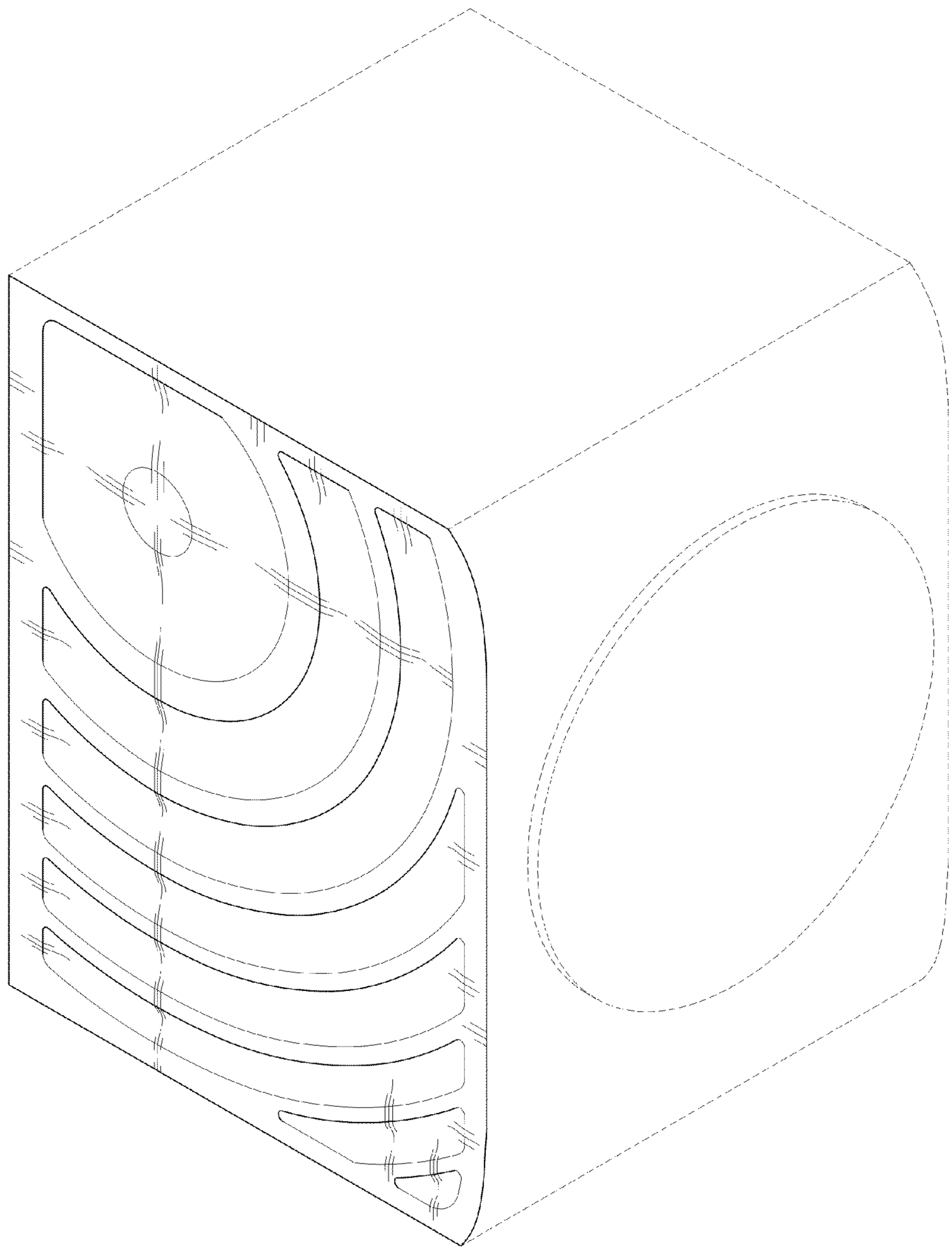

FIG.2

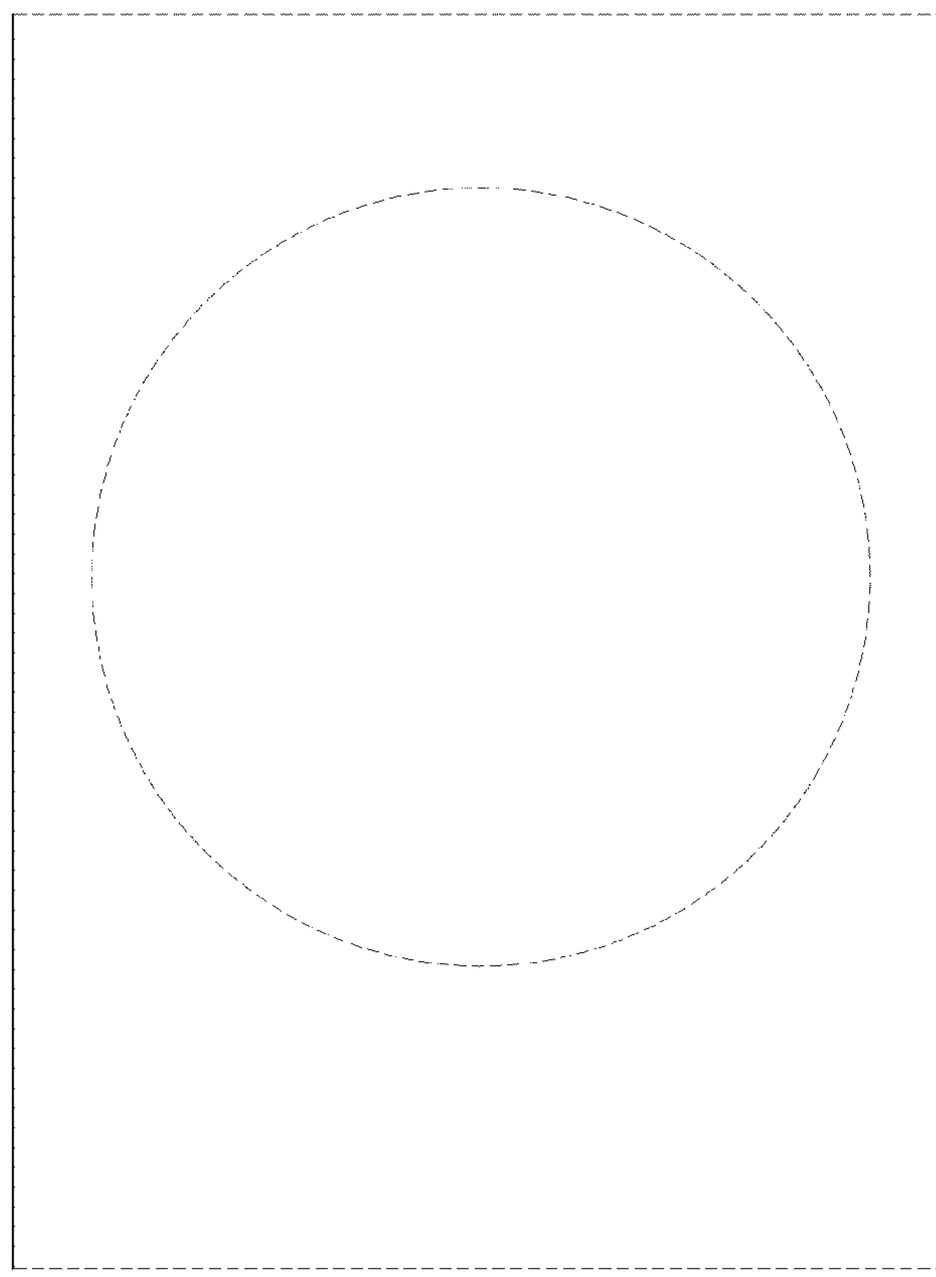

FIG.3

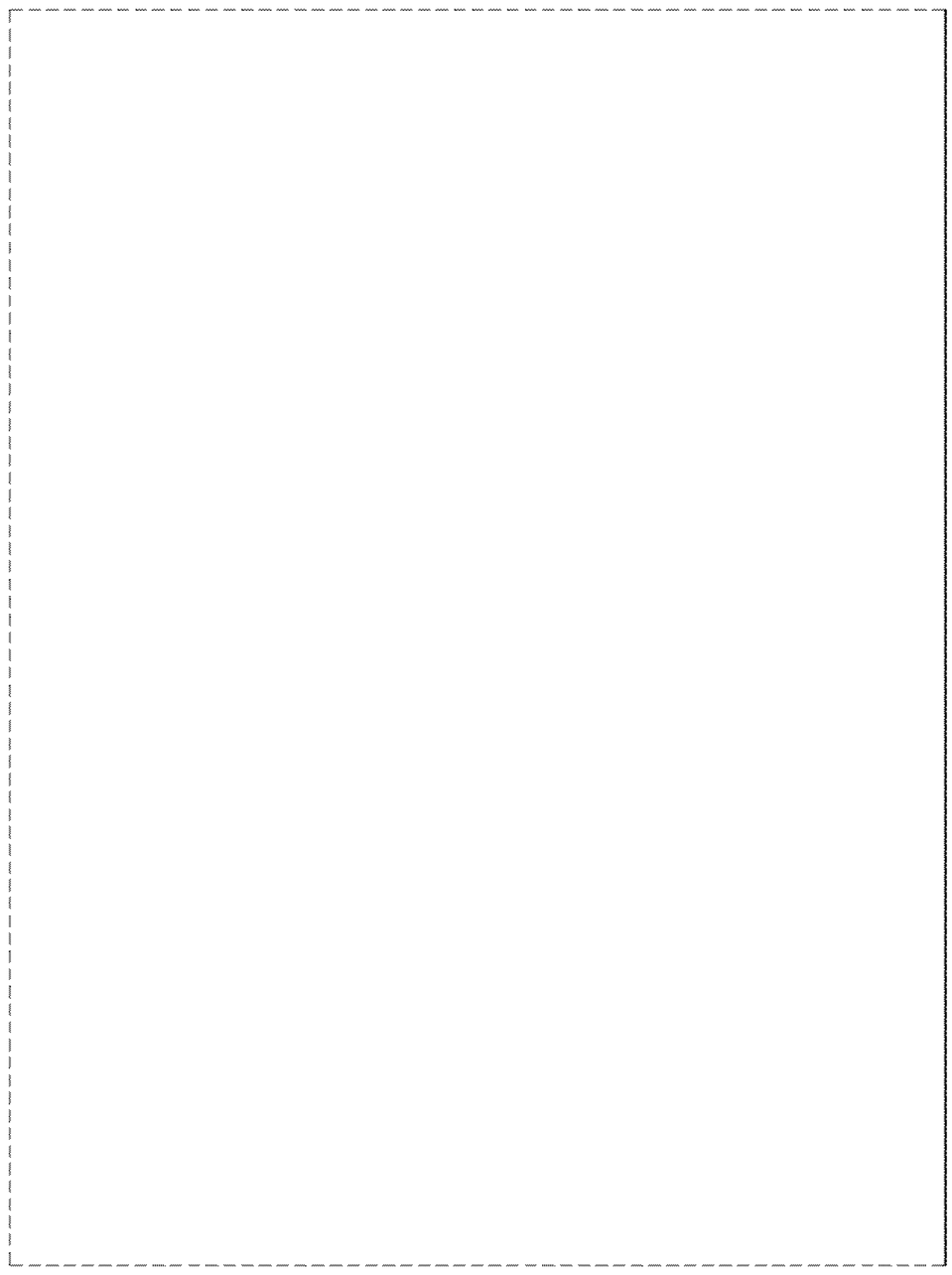

FIG.4

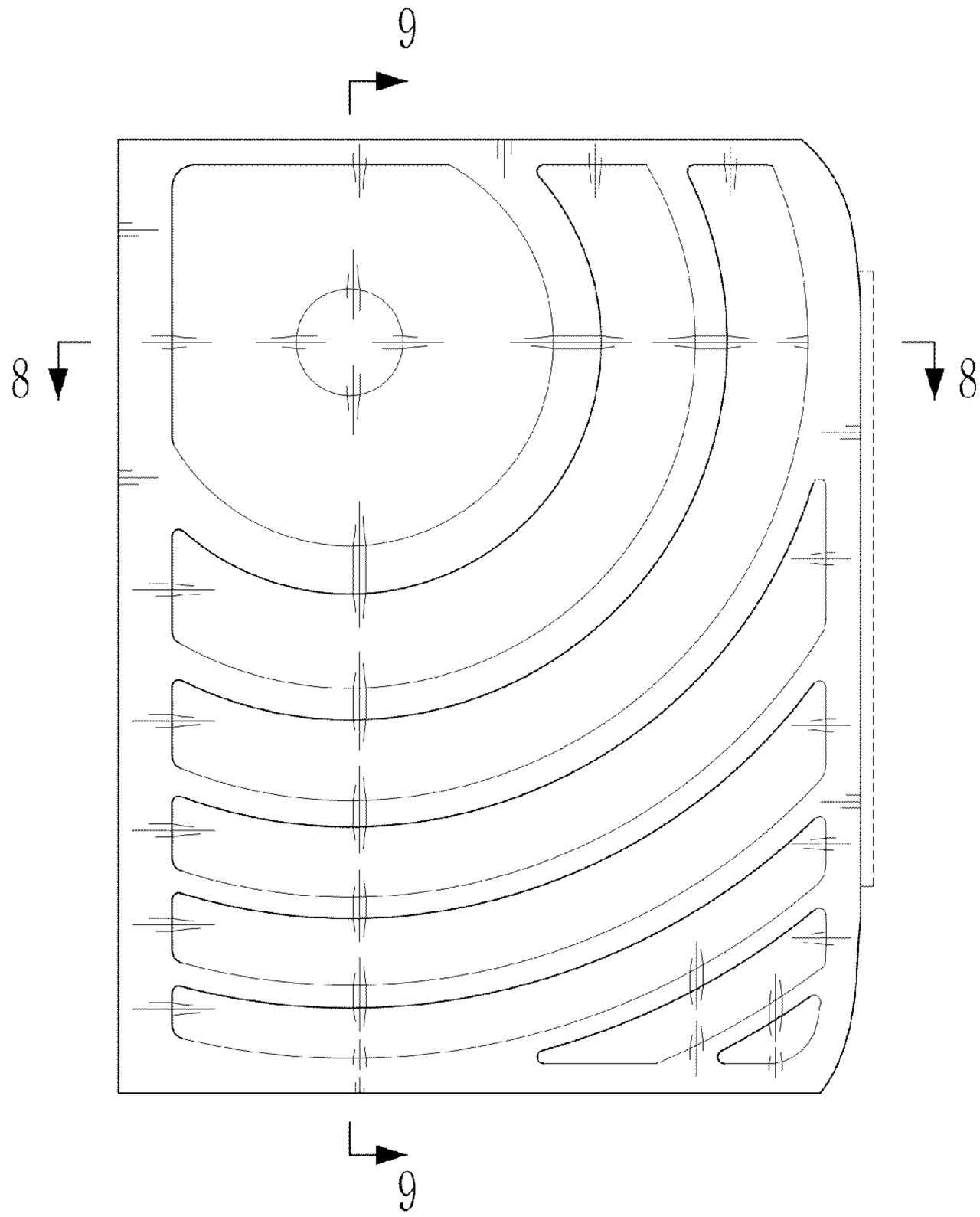

FIG.5

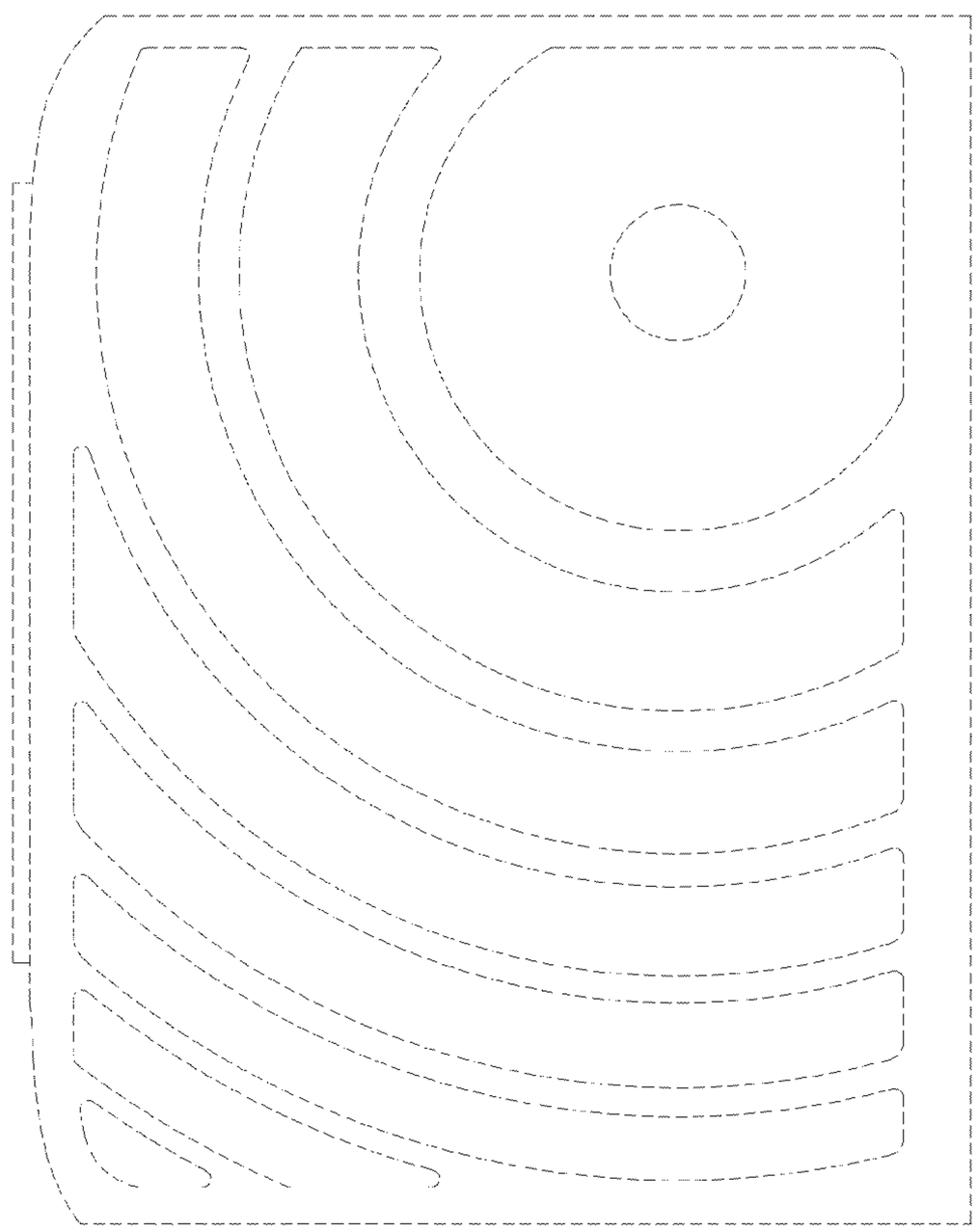

FIG.6

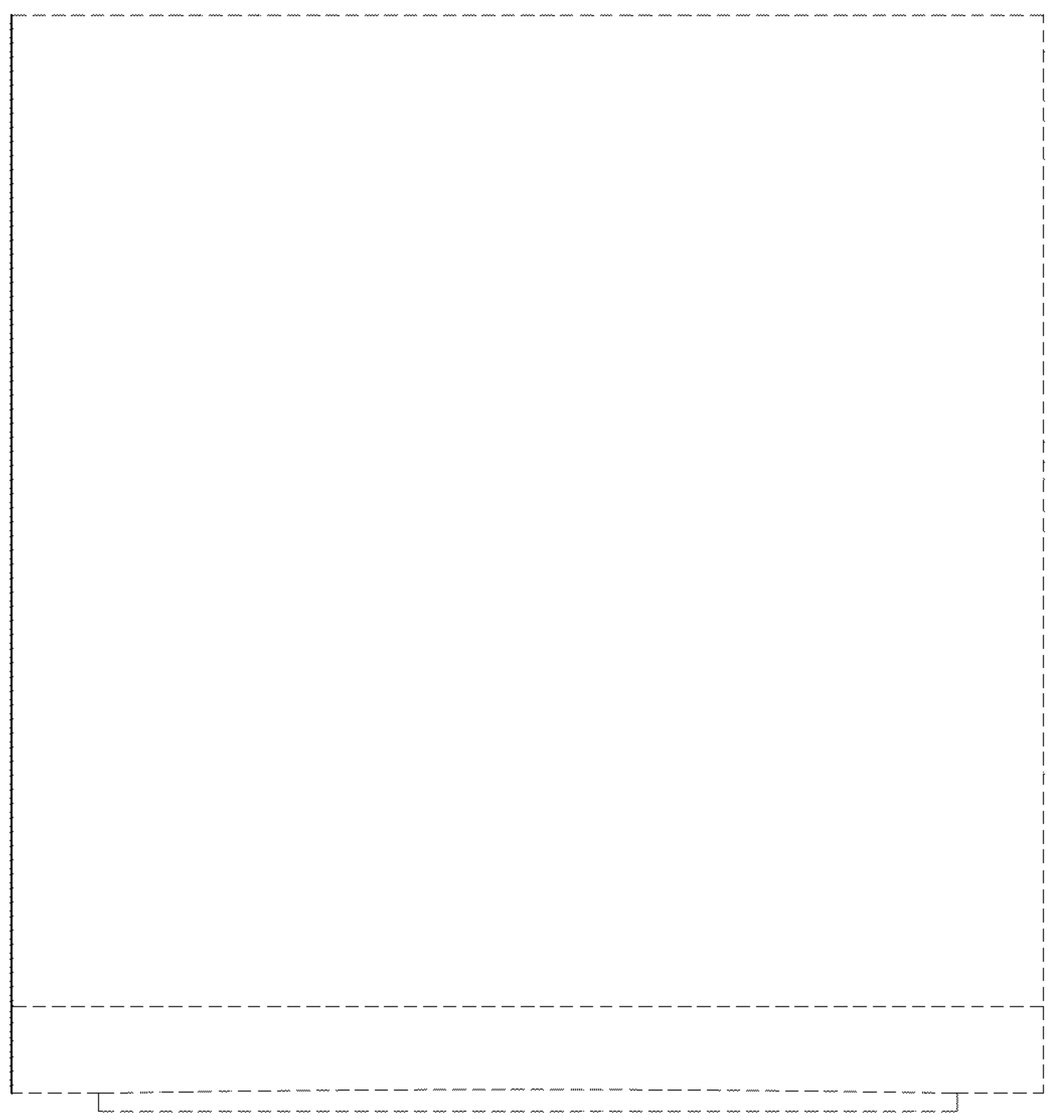

FIG.7

FIG.8

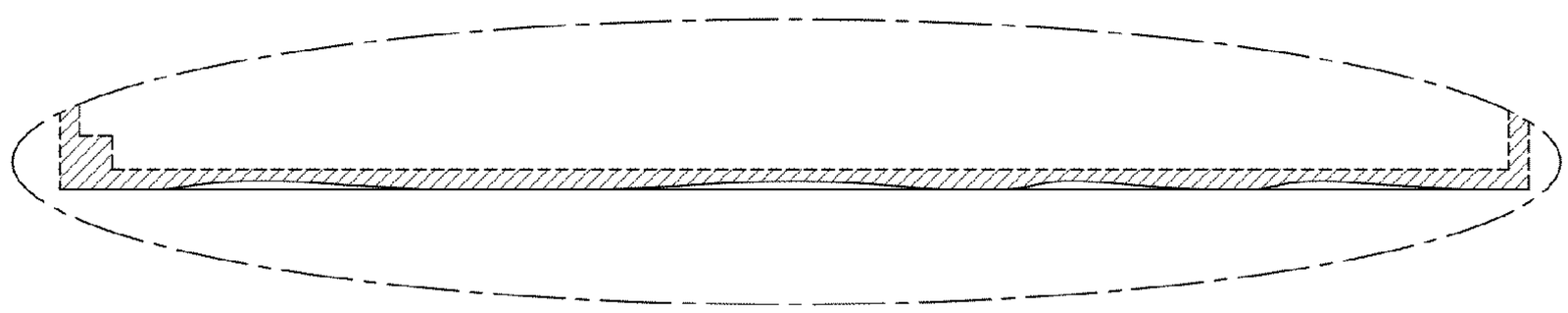
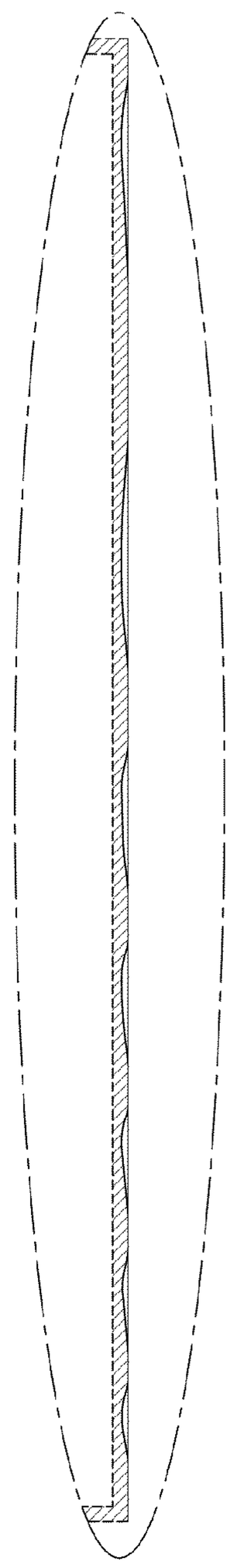
FIG.9