US00D742326S

(12) United States Design Patent
Leung

(10) Patent No.: US D742,326 S
(45) Date of Patent: ** *Nov. 3, 2015

(54) **ELECTRICAL JUNCTION BOX LID**

(71) Applicant: **IPEX TECHNOLOGIES INC.**, Mississauga (CA)

(72) Inventor: **Kwan Yu Leung**, Mississauga (CA)

(73) Assignee: **IPEX TECHNOLOGIES INC.**, Mississauga (CA)

(*) Notice: This patent is subject to a terminal disclaimer.

(**) Term: **14 Years**

(21) Appl. No.: **29/474,294**

(22) Filed: **Aug. 6, 2014**

(30) **Foreign Application Priority Data**

Jul. 25, 2014 (CA) 157863

(51) **LOC (10) Cl.** **13-03**

(52) **U.S. Cl.**
USPC **D13/152**

(58) **Field of Classification Search**
USPC D13/152, 184, 147, 156, 177, 119; 174/58, 53; D8/350; 220/328, 325; 403/408.1
CPC F16J 13/10; F16B 5/02; H02G 3/123
See application file for complete search history.

(56) **References Cited**

U.S. PATENT DOCUMENTS

1,208,618	A		12/1916	Morrison	
2,263,842	A		11/1941	Gross	
2,263,843	A		11/1941	Gross	
2,642,016	A		6/1953	Thalmann	
3,296,763	A		1/1967	Curt	
3,480,311	A	*	11/1969	Lanham, Jr.	403/408.1
3,951,300	A		4/1976	Kalasek	
4,129,395	A		12/1978	Theurer	
4,358,130	A		11/1982	Adams	
4,941,588	A		7/1990	Flider	
5,050,764	A		9/1991	Voss	
5,123,795	A		6/1992	Engel	
D331,225	S	*	11/1992	Mooneyhan	D13/152
5,361,925	A	*	11/1994	Wecke et al.	220/325
D372,703	S	*	8/1996	Hannon et al.	D13/152
D374,429	S	*	10/1996	Blais et al.	D13/156

(Continued)

OTHER PUBLICATIONS

IPEX Technologies Inc., Box and Gasket Assembly, Jul. 19, 2011, 1 page containing 3 photo views, Mississauga ON Canada.

Primary Examiner — Holly Baynham
Assistant Examiner — Rhea Shields

(57) **CLAIM**

The ornamental design for an electrical junction box lid, as shown and described.

DESCRIPTION

FIG. **1** is a perspective view taken from the top and one side of the design;
FIG. **2** is a front elevational view of the design shown in FIG. **1**;
FIG. **3** is a right side elevational view of the design shown in FIG. **1**;
FIG. **4** is a rear elevational view of the design shown in FIG. **1**;
FIG. **5** is a left side elevational view of the design shown in FIG. **1**;
FIG. **6** is a top elevational view of the design shown in FIG. **1**;
FIG. **7** is a bottom elevational view of the design shown in FIG. **1**; and,
FIG. **8** is a bottom perspective view of the design shown in FIG. **1**.
In the drawings, the broken lines are for the purpose of illustrating environment only and form no part of the claimed design.

1 Claim, 8 Drawing Sheets

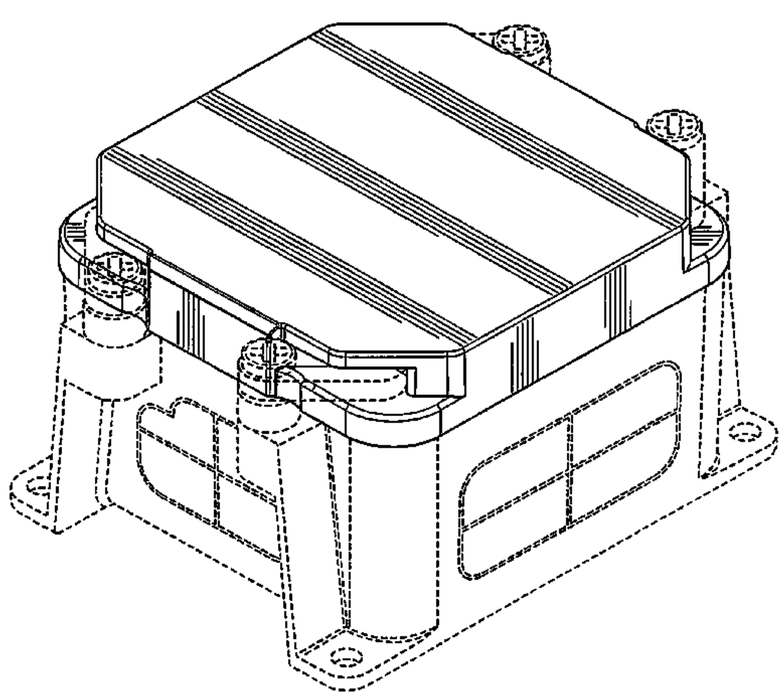

(56) **References Cited**

U.S. PATENT DOCUMENTS

5,865,336	A		2/1999	Krzywdziak et al.	
D417,437	S	*	12/1999	Kim, Il	D13/177
D422,266	S	*	4/2000	Roesch	D13/152
D422,565	S	*	4/2000	Kim, Il	D13/152
D423,461	S	*	4/2000	Layton, Jr.	D13/152
D424,523	S	*	5/2000	Hughes	D13/147
D462,329	S	*	9/2002	Hughes et al.	D13/152
6,530,629	B2		3/2003	Shyr	
D499,070	S	*	11/2004	Lavington	D13/119
7,032,708	B2		4/2006	Popken	
D556,143	S		11/2007	Ni	
D560,170	S		1/2008	Ni	
D563,895	S	*	3/2008	Stuckmann et al.	D13/152
D588,067	S	*	3/2009	Seropian	D13/152
D593,970	S	*	6/2009	Sonntag	D13/184
7,607,553	B2	*	10/2009	Weber	220/328
D606,033	S	*	12/2009	Sonntag	D13/184
D626,509	S	*	11/2010	Severing	D13/147
D632,256	S	*	2/2011	Higuchi	D13/152
D635,098	S	*	3/2011	Ismert	D13/152
D636,343	S	*	4/2011	Leal et al.	D13/152
D638,367	S	*	5/2011	Isaacks et al.	D13/152
7,997,841	B2		8/2011	Show	
D676,814	S	*	2/2013	Paul	D13/152
D686,995	S	*	7/2013	Nikayin	D13/152
D686,997	S	*	7/2013	Inaba et al.	D13/152
D688,211	S	*	8/2013	Xue et al.	D13/152
D688,241	S		8/2013	Miller et al.	
8,575,483	B2	*	11/2013	Gauthier	174/58
D698,318	S	*	1/2014	Villen Hernandez et al.	D13/152
D702,198	S	*	4/2014	Gretz	D13/184
8,748,744	B2	*	6/2014	O'Connor et al.	174/53
D709,835	S	*	7/2014	Jones	D13/152
D711,834	S	*	8/2014	Jones	D13/152
D713,355	S	*	9/2014	Jones et al.	D13/152
D714,617	S	*	10/2014	Miller et al.	D8/350
2011/0262243	A1		10/2011	Glickman	

* cited by examiner

Fig. 1

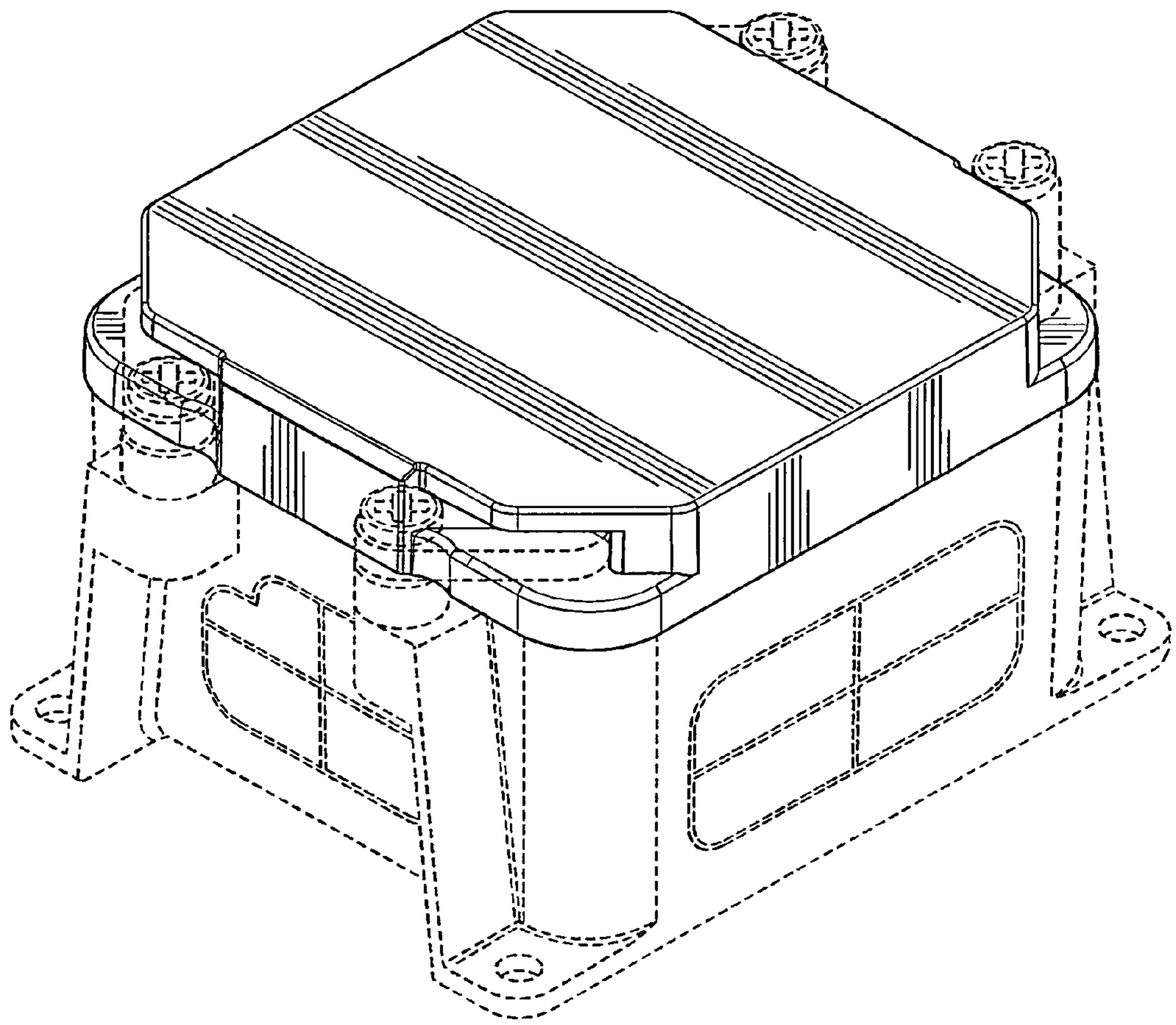

Fig. 2

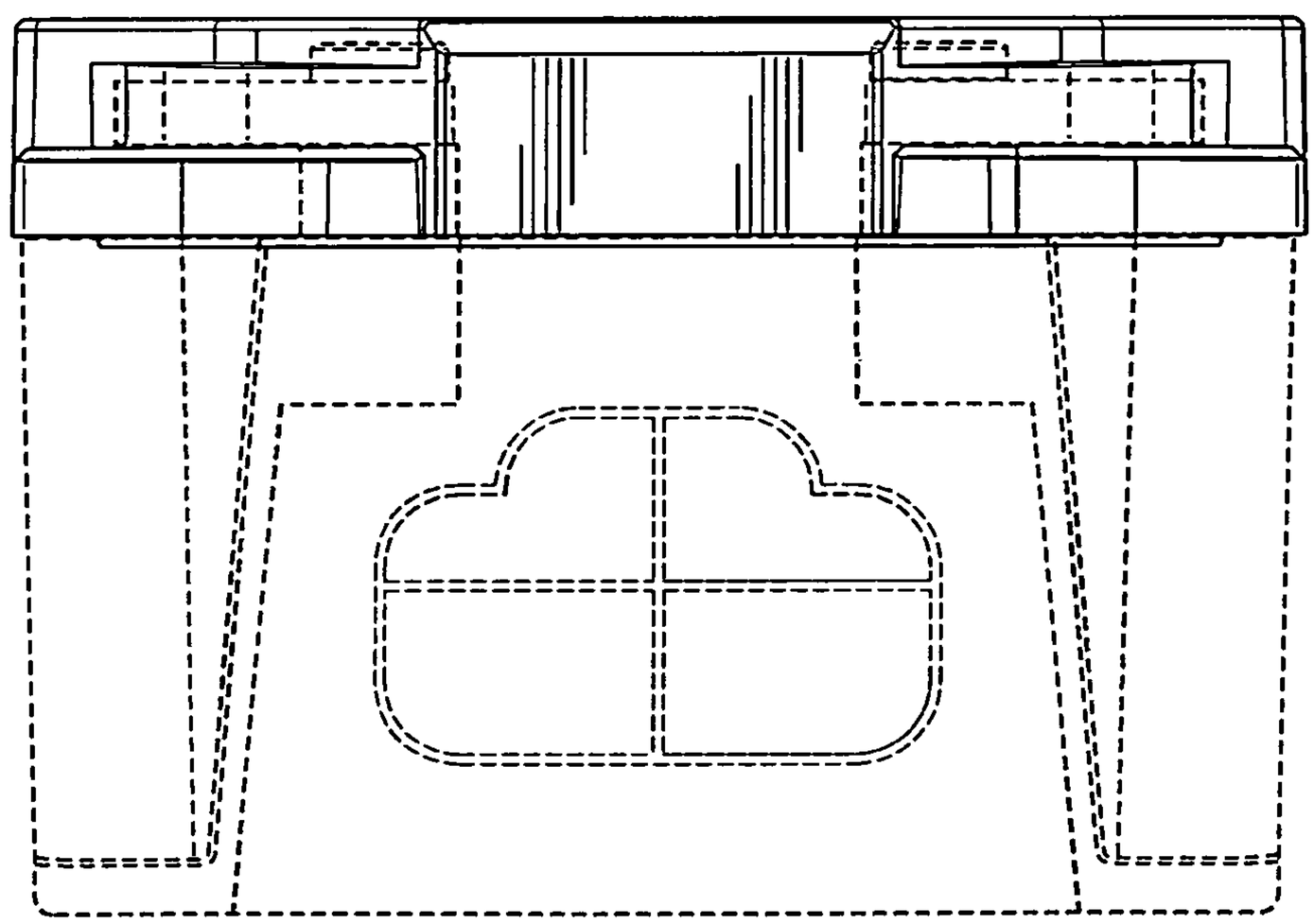

Fig. 3

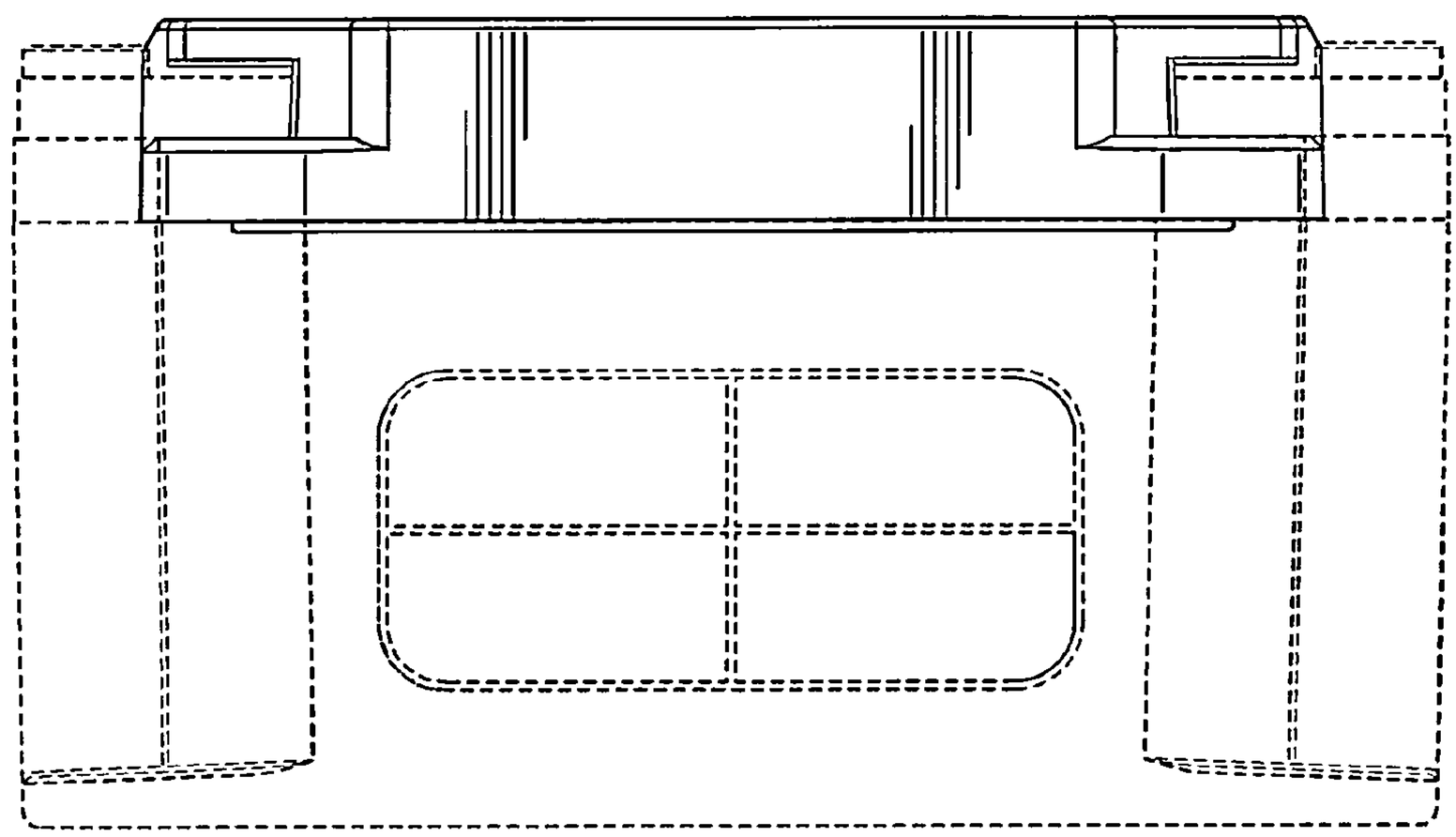

Fig. 4

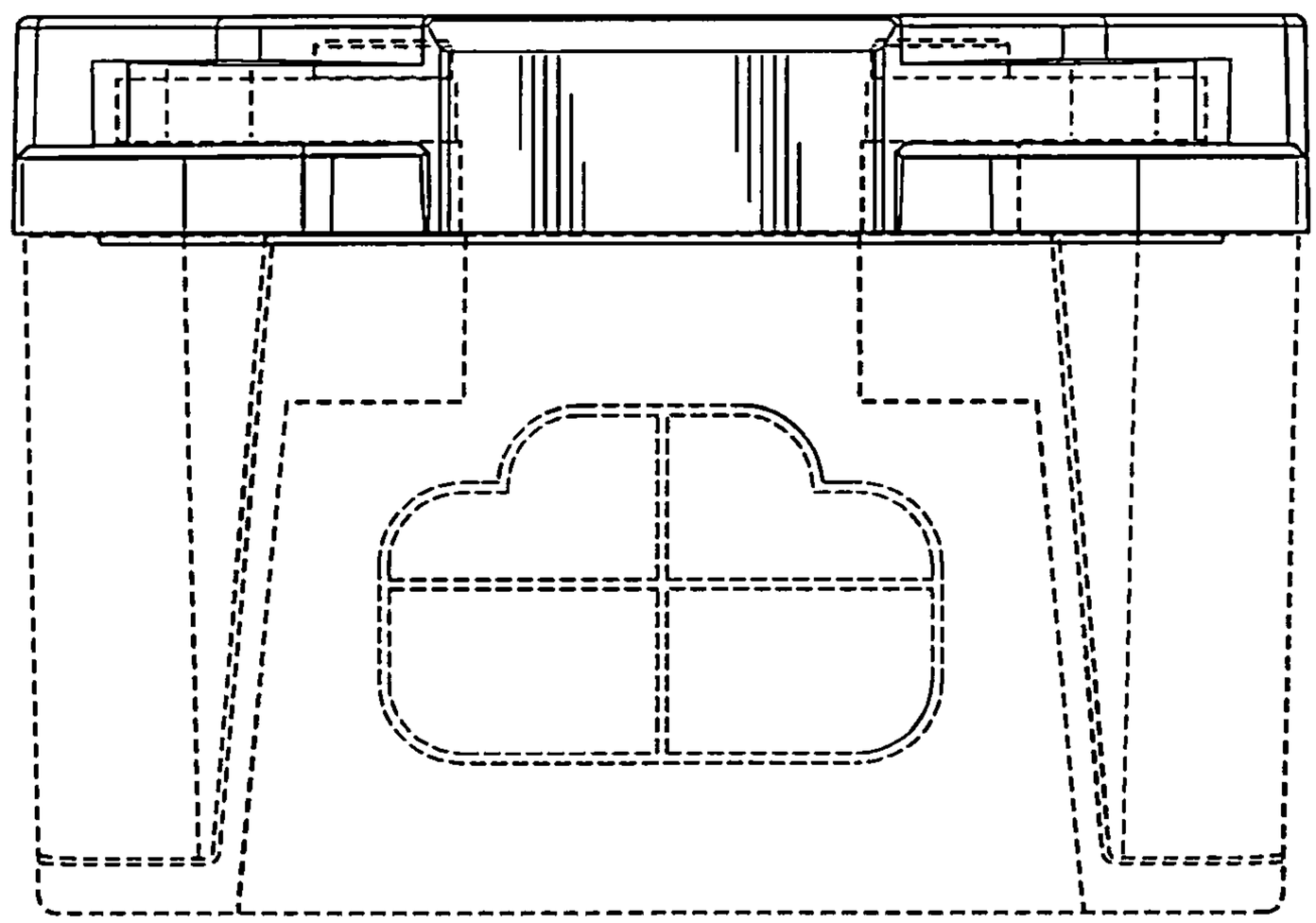

Fig. 5

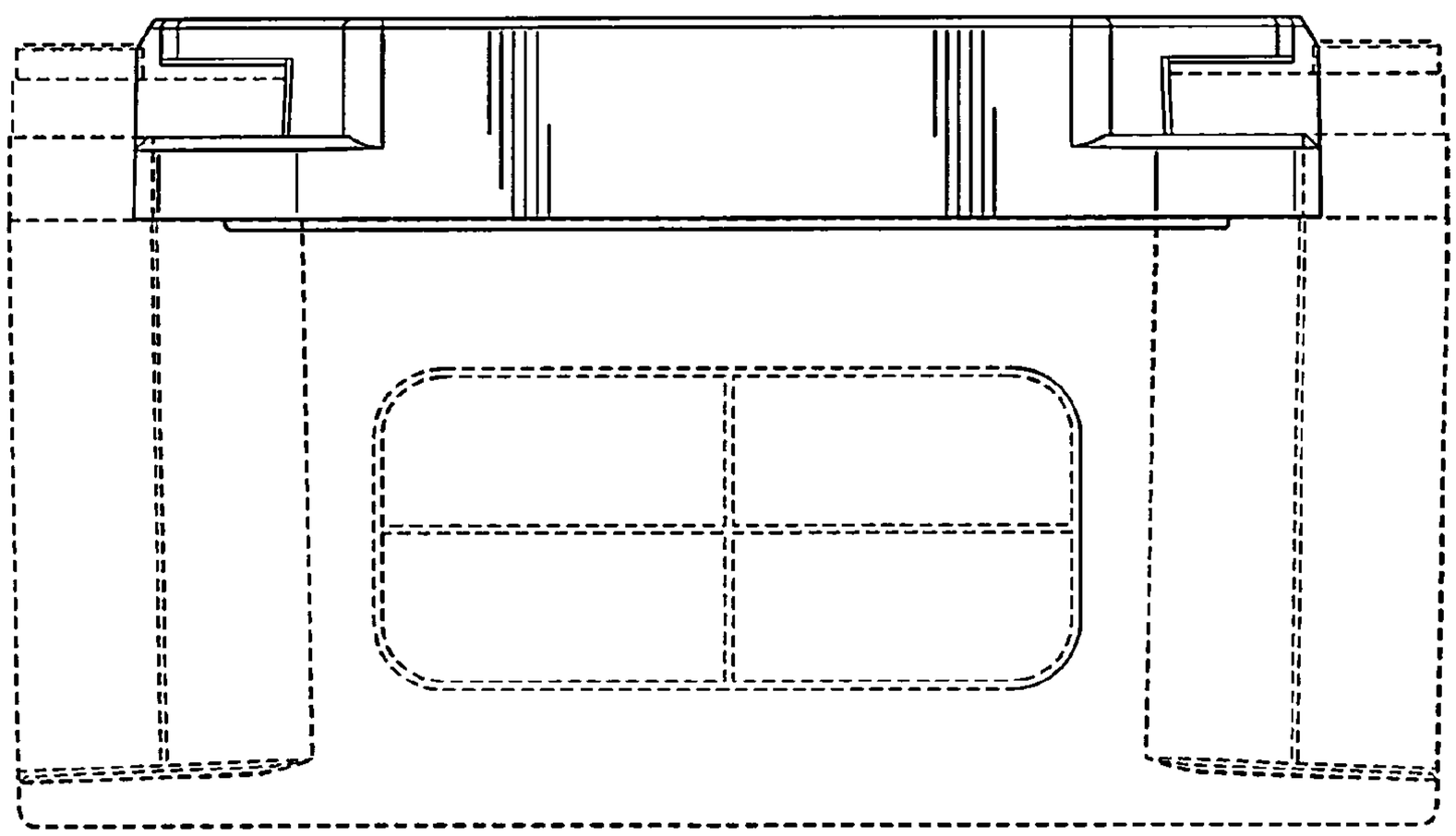

Fig. 6

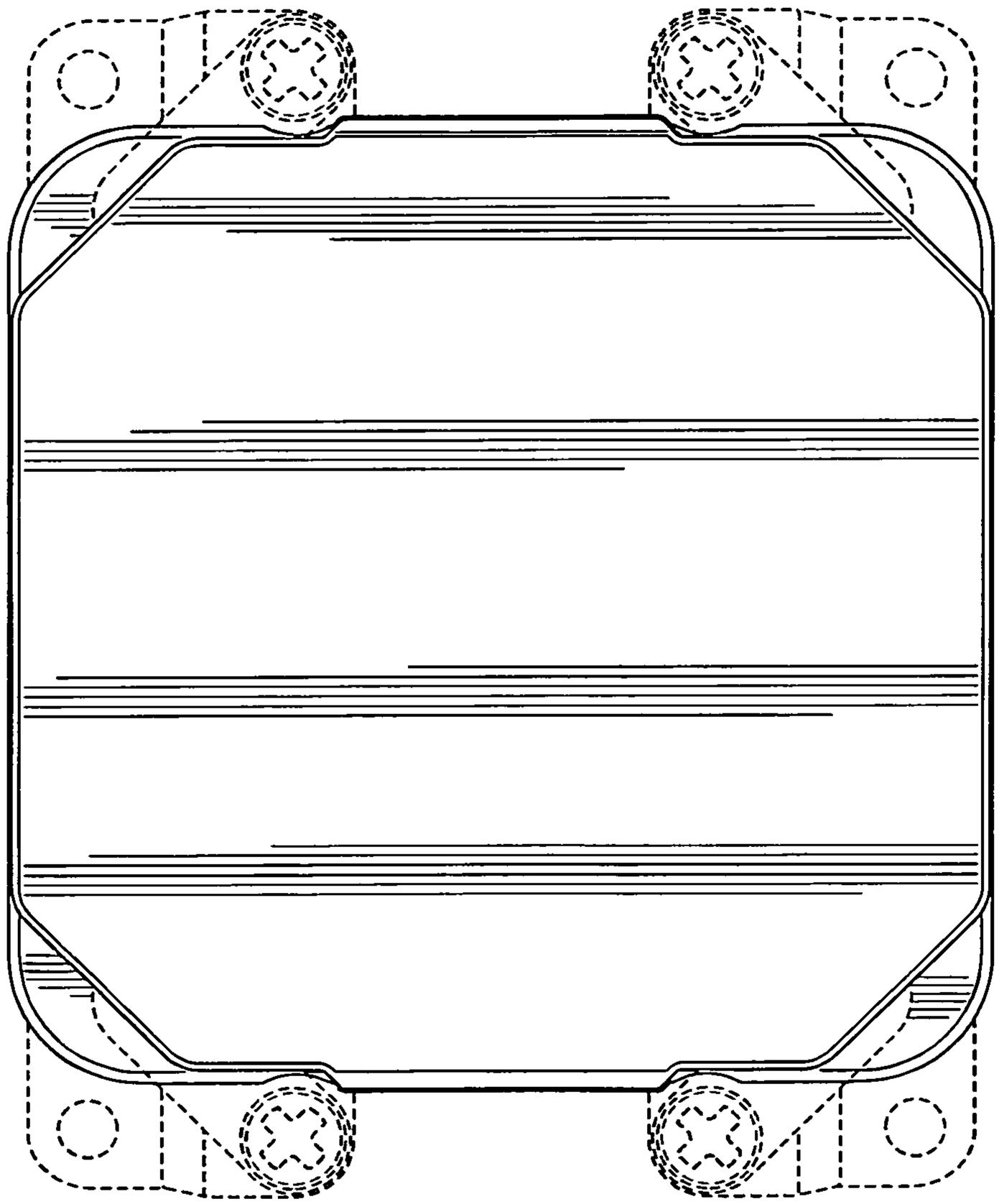

Fig. 7

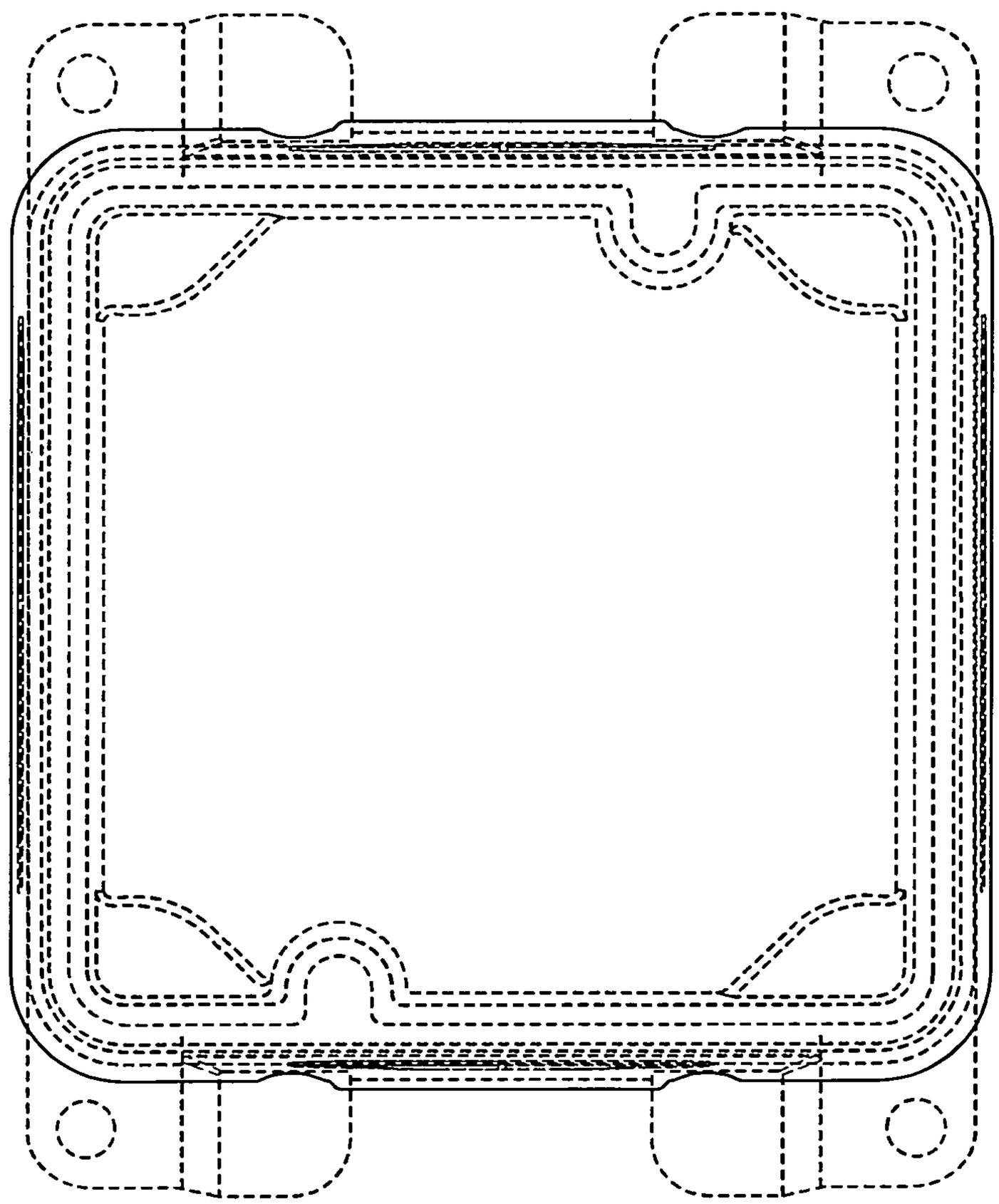
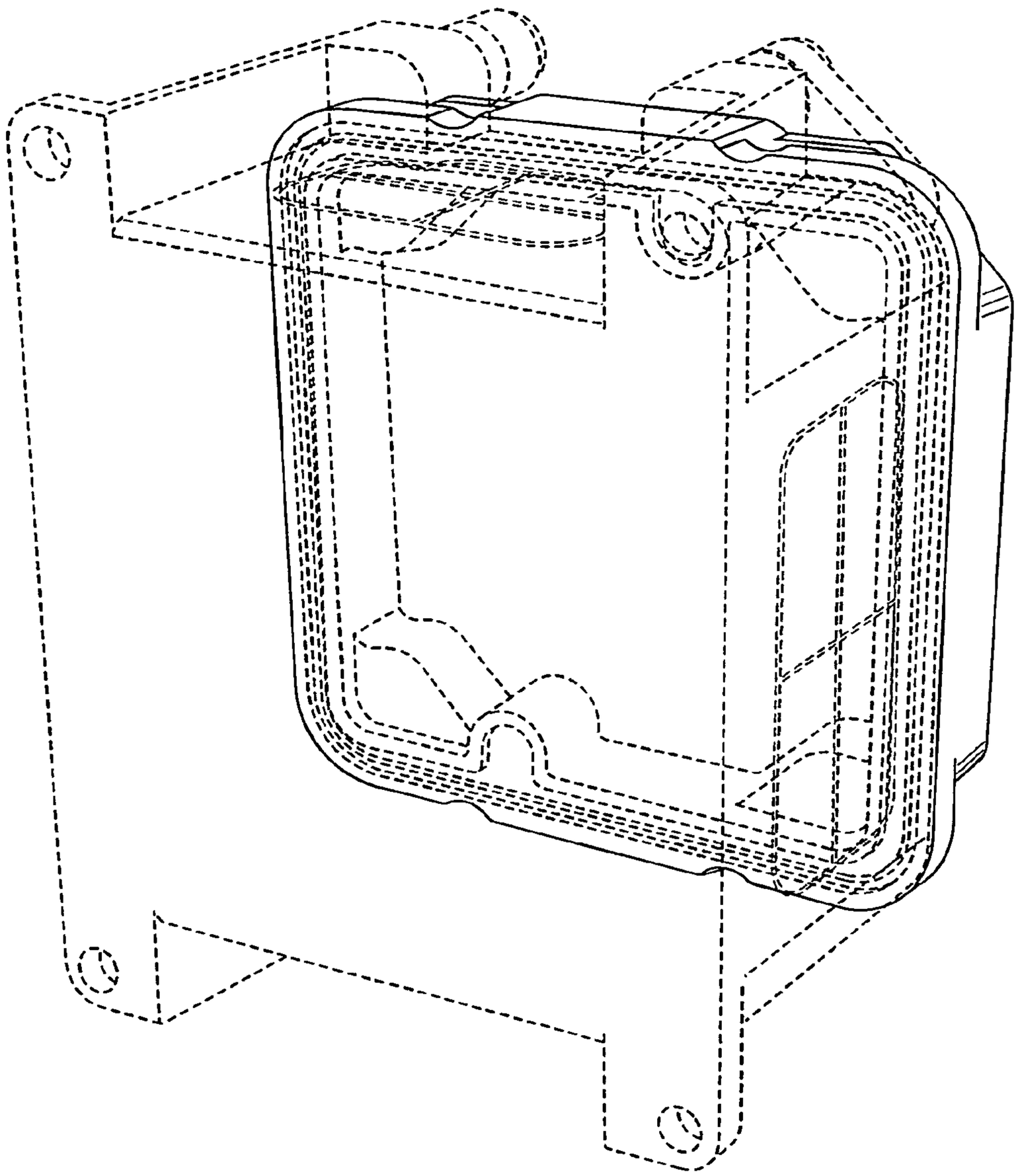
Fig. 8