US00D741420S

(12) United States Design Patent
Campanaro et al.

(10) Patent No.: US D741,420 S
(45) Date of Patent: ** Oct. 20, 2015

(54) **ROWING EXERCISE DEVICE**

(71) Applicant: **Total Gym Global Corp.**, San Diego, CA (US)

(72) Inventors: **Thomas J. Campanaro**, Rancho Santa Fe, CA (US); **Jesse Thomas Campanaro**, San Diego, CA (US); **Dan McCutcheon**, San Diego, CA (US)

(73) Assignee: **Total Gym Global Corp.**, San Diego, CA (US)

(**) Term: **14 Years**

(21) Appl. No.: **29/506,827**

(22) Filed: **Oct. 21, 2014**

(51) **LOC (10) Cl.** **21-02**

(52) **U.S. Cl.**
USPC **D21/674**

(58) **Field of Classification Search**
USPC D6/552; D21/686, 676, 687, 662, 674, D21/666, 673, 690, 679, 694, 691, 675, D21/688; 211/85.7; 206/579; 135/122; 52/83, 27; 482/145, 23, 2, 72, 57, 62, 482/60, 142, 104, 131, 96, 132, 135, 140, 482/121, 130, 95, 92, 73, 144, 143, 907, 482/128, 108, 908, 94, 106, 97, 123, 126, 482/38, 41, 133, 137, 35, 101, 147, 115, 482/138, 91, 70, 110, 52, 71, 8; 136/251; 290/55; 114/264, 382; 472/128; 606/241, 244; 108/4; 5/607, 624; 601/24, 242, 23; 248/300; 29/428
CPC A63B 21/0552; A63B 21/1492; A63B 22/001; A63B 23/0211; A63B 2208/0204; A63B 21/154
See application file for complete search history.

(56) **References Cited**

U.S. PATENT DOCUMENTS

D251,079	S	*	2/1979	Shugarman	D21/676
D284,597	S	*	7/1986	Smith et al.	D21/676
D362,700	S	*	9/1995	Breibart et al.	D21/673
D382,319	S	*	8/1997	Gerschefske et al.	D21/674
D405,132	S	*	2/1999	Westfall et al.	D21/676
6,120,425	A	*	9/2000	Endelman	482/142
6,371,895	B1	*	4/2002	Endelman et al.	482/135
6,440,045	B1	*	8/2002	Gaston	482/140
D493,853	S	*	8/2004	Campanaro et al.	D21/676
D556,274	S	*	11/2007	Morgan	D21/662
D608,401	S	*	1/2010	Campanaro et al.	D21/687
D612,000	S	*	3/2010	Campanaro et al.	D21/687
8,033,971	B2	*	10/2011	Campanaro et al.	482/142
8,075,457	B2	*	12/2011	Campanaro et al.	482/96

(Continued)

Primary Examiner — Robert M Spear
Assistant Examiner — Ryan Harvey
(74) *Attorney, Agent, or Firm* — Stephen C. Beuerle; Procopio Cory Hargreaves & Savitch LLP

(57) **CLAIM**

The ornamental design for a rowing exercise device, as shown and described.

DESCRIPTION

FIG. **1** is a perspective view of the rowing exercise device;
FIG. **2** is a front elevation view of the rowing exercise device;
FIG. **3** is a rear elevation view of the rowing exercise device;
FIG. **4** is a left side elevational view of the rowing exercise device;
FIG. **5** is a right side elevational view of the rowing exercise device;
FIG. **6** is a top plan view of the rowing exercise device; and,
FIG. **7** is a bottom plan view of the rowing exercise device.

1 Claim, 6 Drawing Sheets

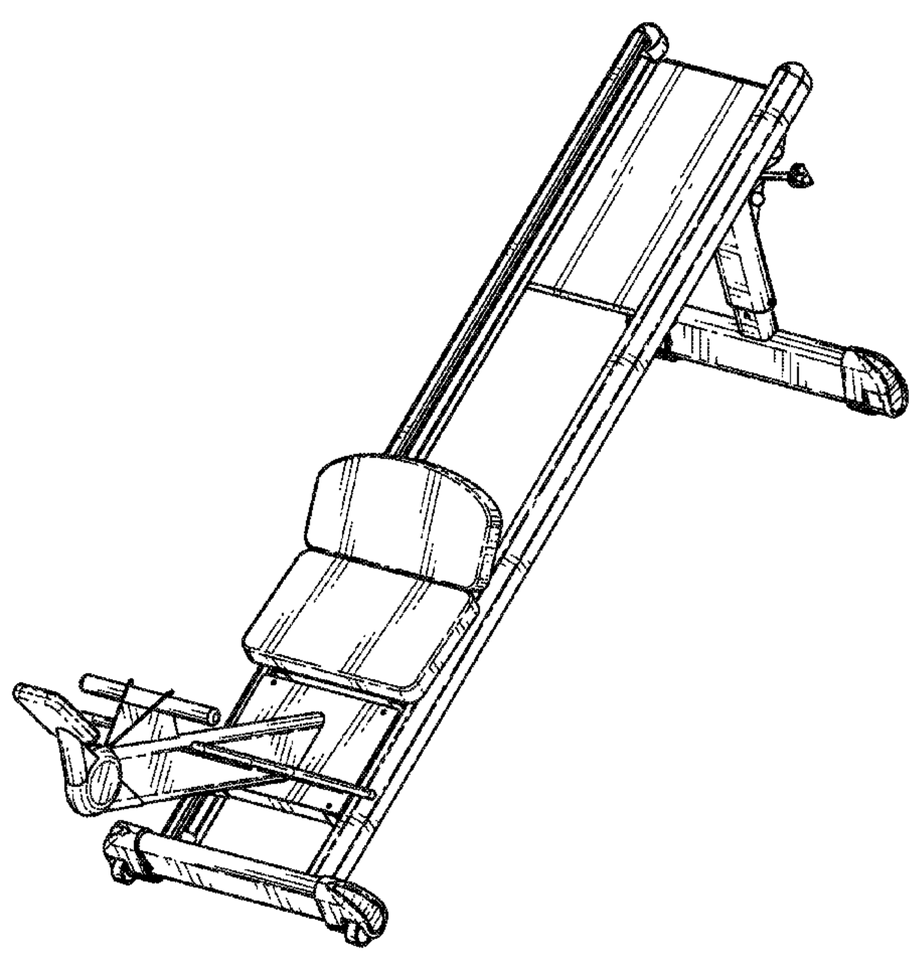

(56) **References Cited**

U.S. PATENT DOCUMENTS

D659,205	S *	5/2012	Endelman et al.	D21/686
8,323,157	B2 *	12/2012	Campanaro et al.	482/96
D694,347	S *	11/2013	Campanaro et al.	D21/676
D703,279	S *	4/2014	Ho	D21/673
8,702,575	B2 *	4/2014	McVay et al.	482/142
D726,263	S *	4/2015	Anderson	D21/676
2001/0056011	A1 *	12/2001	Endelman et al.	482/121
2006/0019806	A1 *	1/2006	Mikulski	482/121
2008/0280736	A1 *	11/2008	D'Eredita	482/72
2009/0163323	A1 *	6/2009	Bocchicchio	482/8
2010/0227748	A1 *	9/2010	Campanaro et al.	482/140
2012/0053028	A1 *	3/2012	Campanaro et al.	482/131
2014/0141948	A1 *	5/2014	Aronson et al.	482/128
2014/0194260	A1 *	7/2014	Campanaro et al.	482/131

* cited by examiner

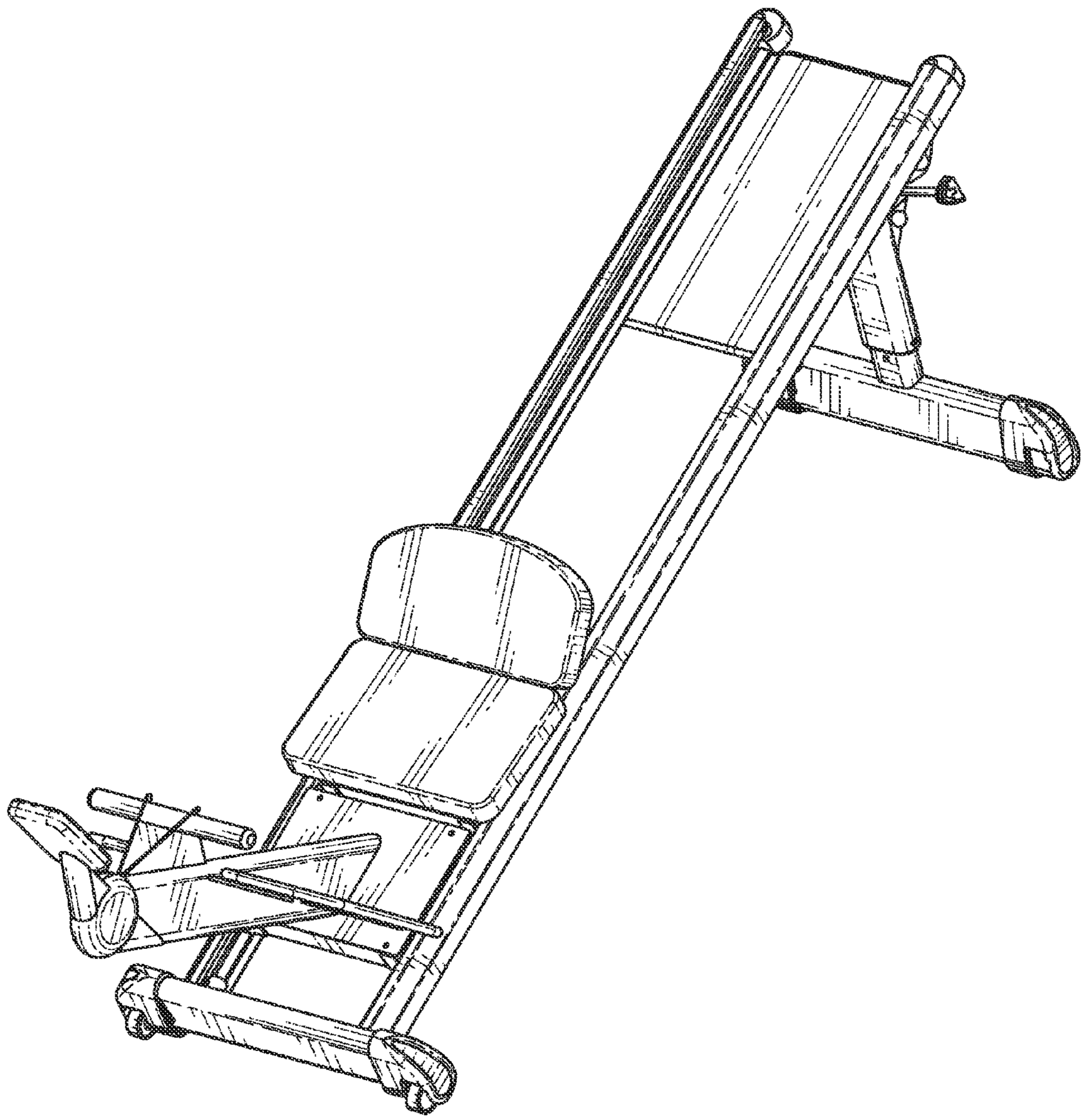

FIG. 1

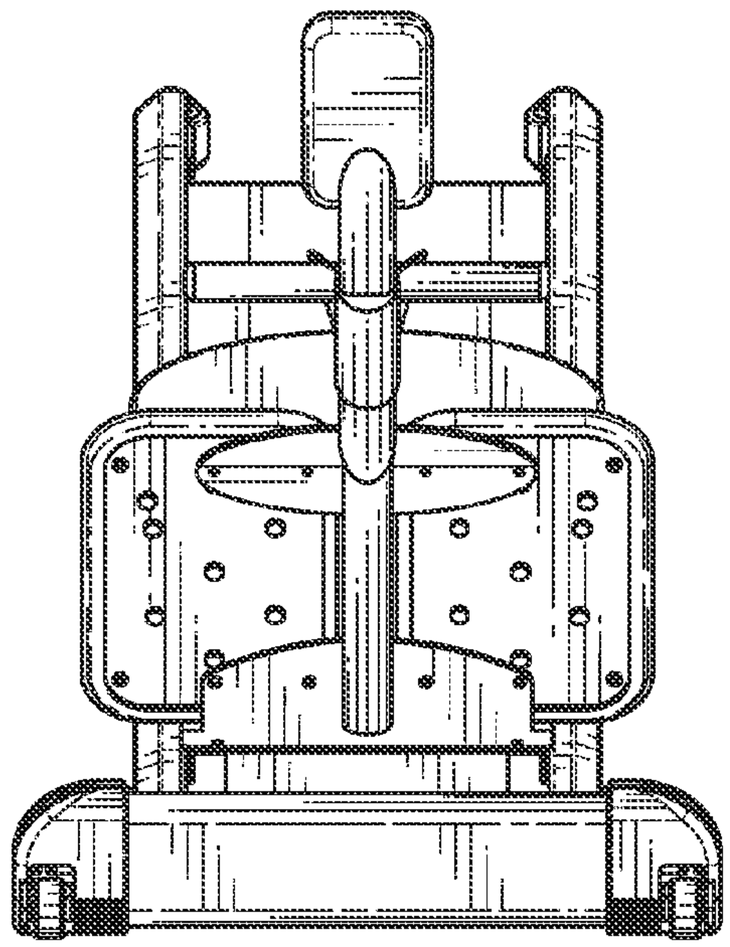

FIG. 2

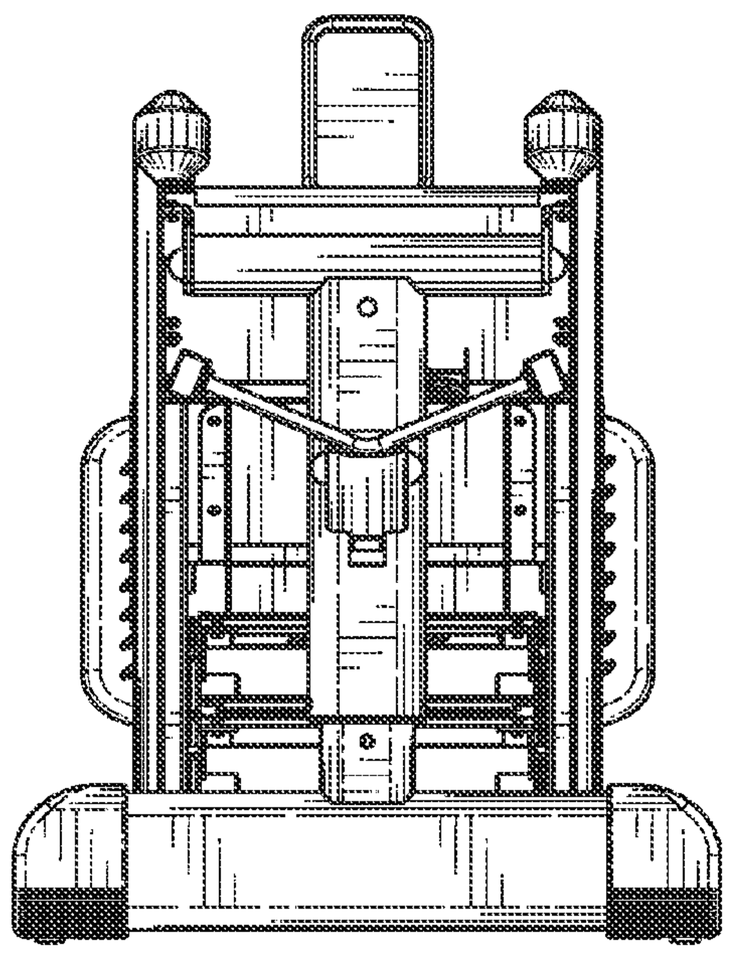

FIG. 3

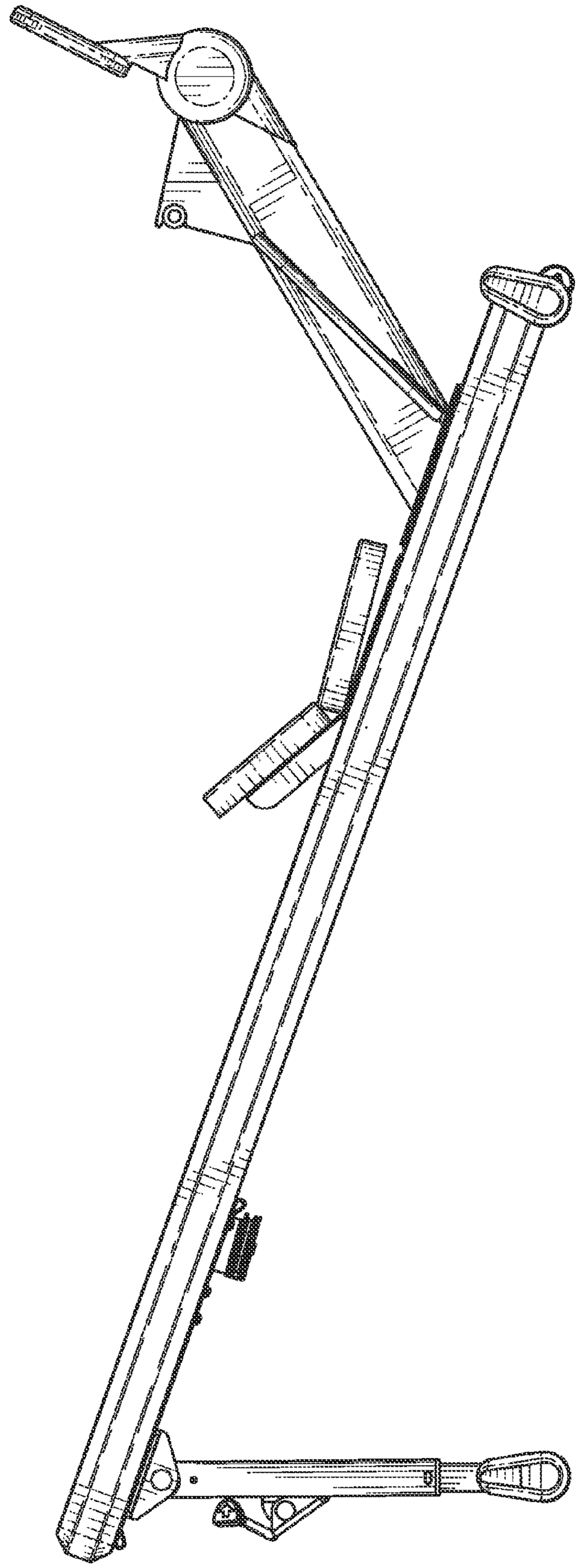

FIG. 4

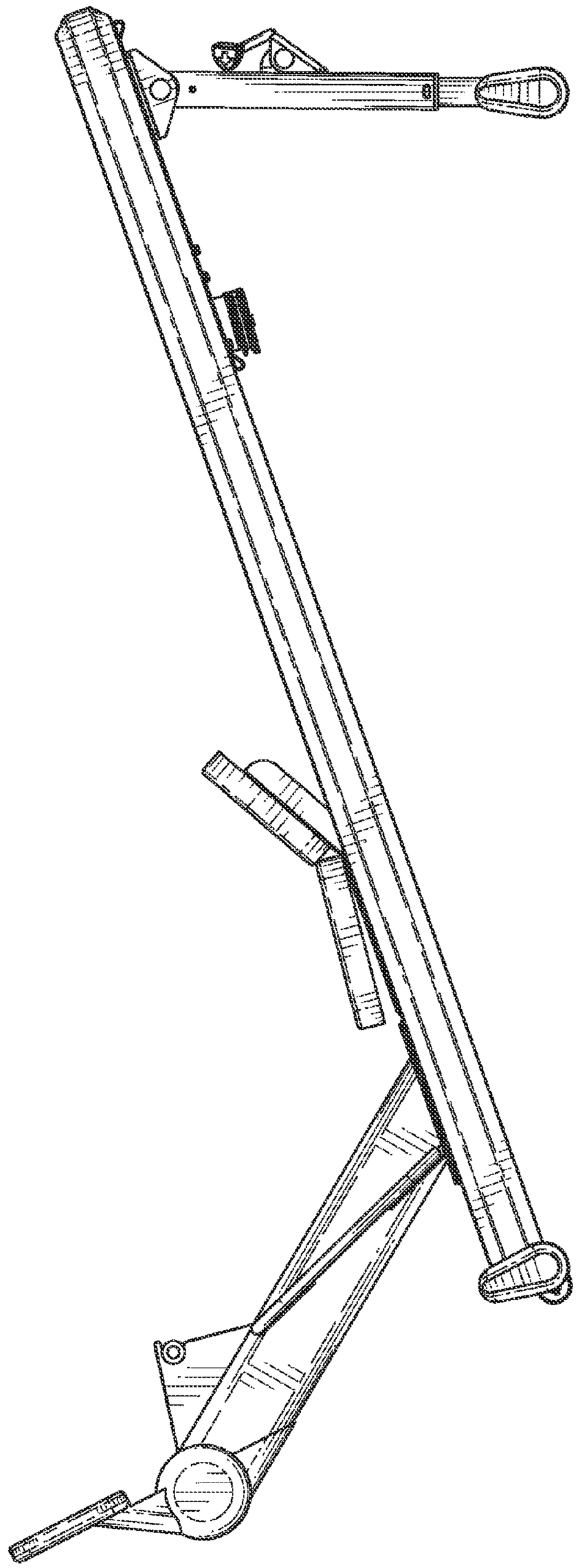

FIG. 5

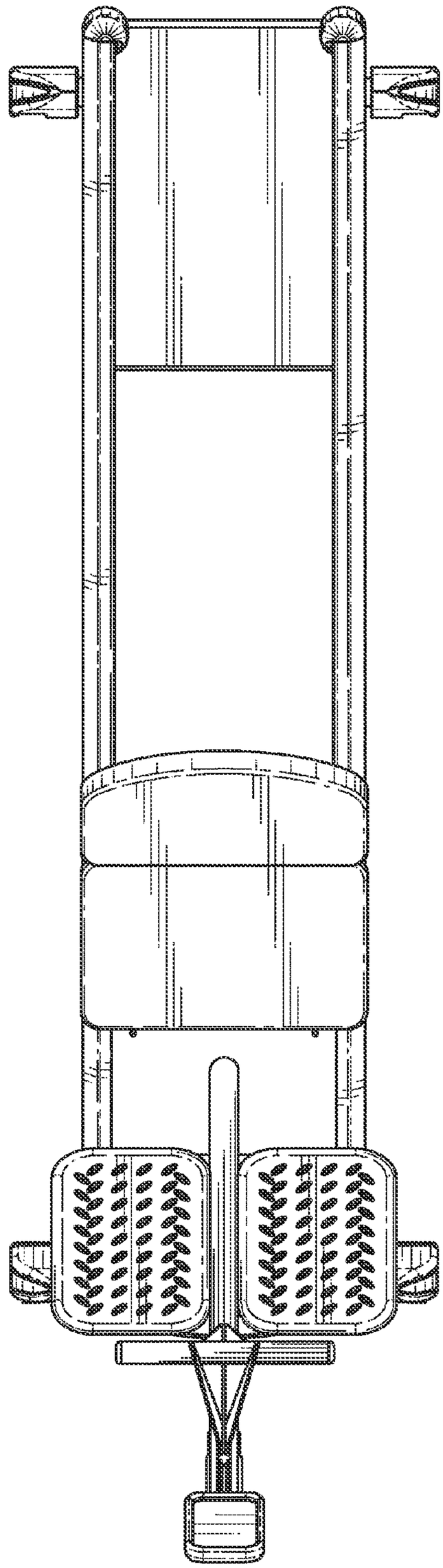

FIG. 6

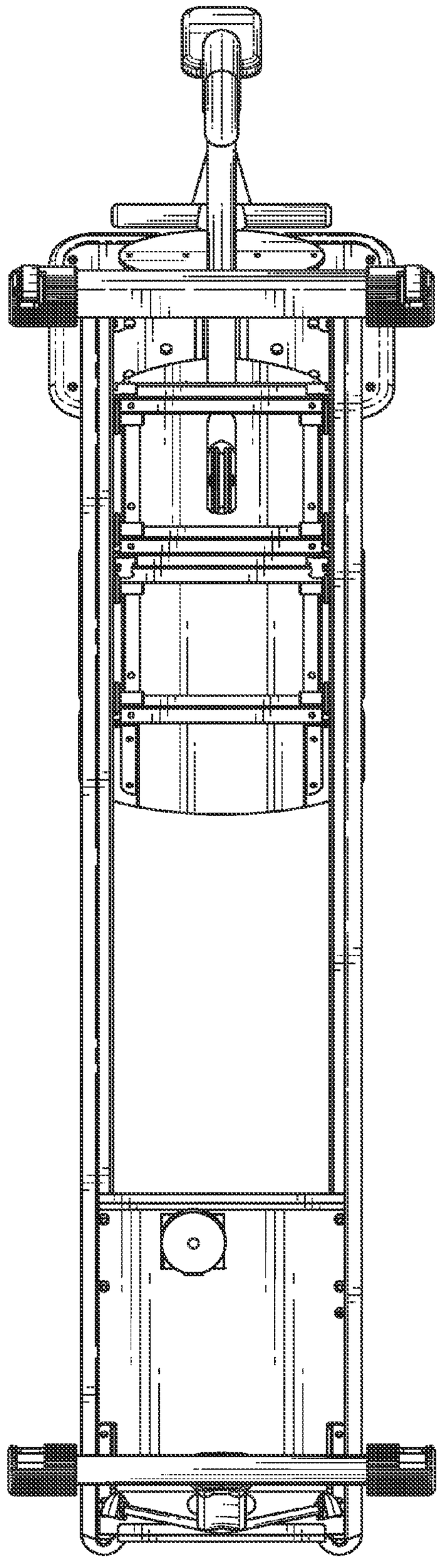

FIG. 7