US00D740757S

(12) United States Design Patent
Scholeno

(10) Patent No.: US D740,757 S
(45) Date of Patent: ** Oct. 13, 2015

(54) **VERTICAL ELECTRICAL CONNECTOR**

(71) Applicant: **Michael Scholeno**, York, PA (US)

(72) Inventor: **Michael Scholeno**, York, PA (US)

(73) Assignee: **FCI AMERICAS TECHNOLOGY LLC**, Carson City, NV (US)

(**) Term: **14 Years**

(21) Appl. No.: **29/507,836**

(22) Filed: **Oct. 31, 2014**

Related U.S. Application Data

(62) Division of application No. 29/418,380, filed on Apr. 16, 2012, now Pat. No. Des. 718,243.

(51) **LOC (10) Cl.** **13-03**

(52) **U.S. Cl.**
USPC **D13/147**

(58) **Field of Classification Search**
USPC D13/147, 154, 184, 199; 439/74, 108, 439/180, 246, 252, 278, 374, 378, 379, 381, 439/527, 529, 533, 660, 717, 865–894, 439/953; 174/16.3; 257/697, 727; 361/769
See application file for complete search history.

(56) **References Cited**

U.S. PATENT DOCUMENTS

D205,509	S		8/1966	Reynolds
D210,829	S		4/1968	Hanlon et al.
D497,343	S		10/2004	Busse et al.
D598,389	S		8/2009	Yu et al.
D608,292	S		1/2010	Stutz
D611,906	S		3/2010	Takada et al.
D611,907	S		3/2010	Takada et al.
D718,243	S	*	11/2014	Scholeno D13/147
D718,244	S		11/2014	Scholeno
D718,248	S		11/2014	Harper, Jr.
D718,249	S		11/2014	Lord et al.
D718,250	S		11/2014	Lord
2004/0161954	A1		8/2004	Johnescu et al.
2006/0160425	A1		7/2006	Fuerst
2012/0034820	A1		2/2012	Lang et al.
2012/0258633	A1		10/2012	Johnson et al.

OTHER PUBLICATIONS

SFF-Committee, "Mini Multilane 12 Gbs 8/4X Unshielded Connector," SFF-8643 Rev 2.3, Jan. 11, 2011, 24 pages.

* cited by examiner

Primary Examiner — Daniel Bui
(74) *Attorney, Agent, or Firm* — Baker & Hostetler LLP

(57) **CLAIM**

The ornamental design for a vertical electrical connector, as shown and described.

DESCRIPTION

FIG. **1** is a top, right, front perspective view of a vertical electrical connector according to an embodiment of my design;
FIG. **2** is a bottom, left, front perspective view thereof;
FIG. **3** is a bottom, left, rear perspective view thereof;
FIG. **4** is a left side elevation view thereof;
FIG. **5** is a right side elevation view thereof;
FIG. **6** is a front elevation view thereof;
FIG. **7** is a rear elevation view thereof;
FIG. **8** is a top plan view thereof; and,
FIG. **9** is a bottom plan view thereof.
The even-broken line in the figure drawings is included to show unclaimed environment and forms no part of the claimed design. The dash-dot broken line represents the boundary of the claimed design.

1 Claim, 5 Drawing Sheets

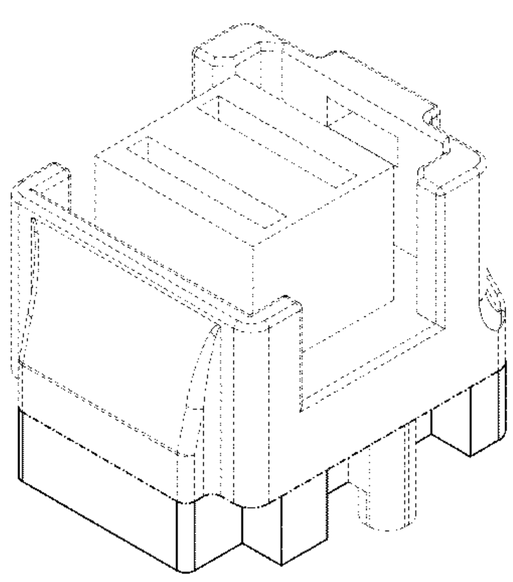

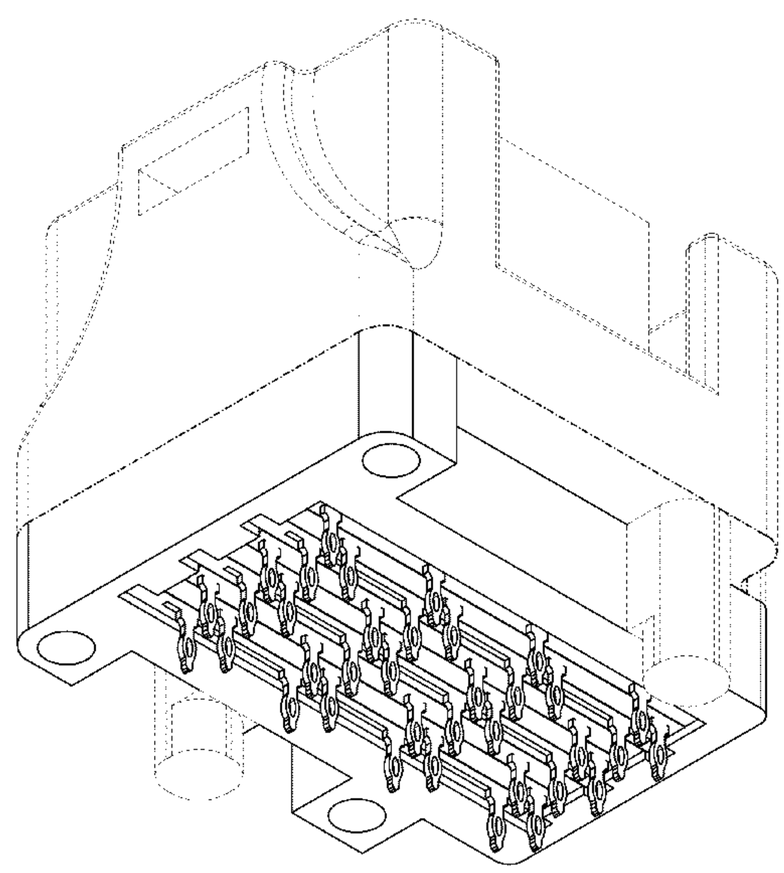

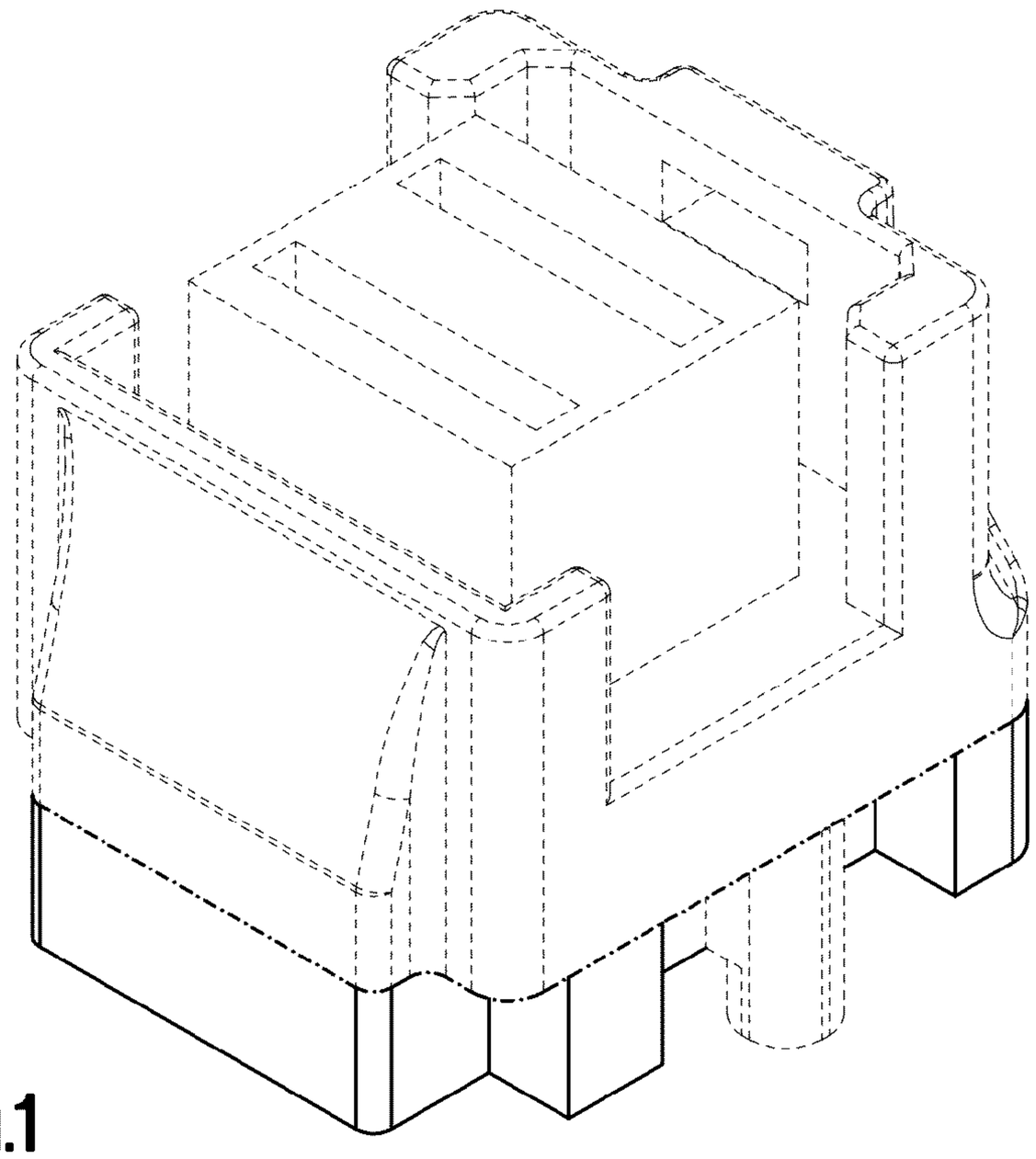

Fig.1

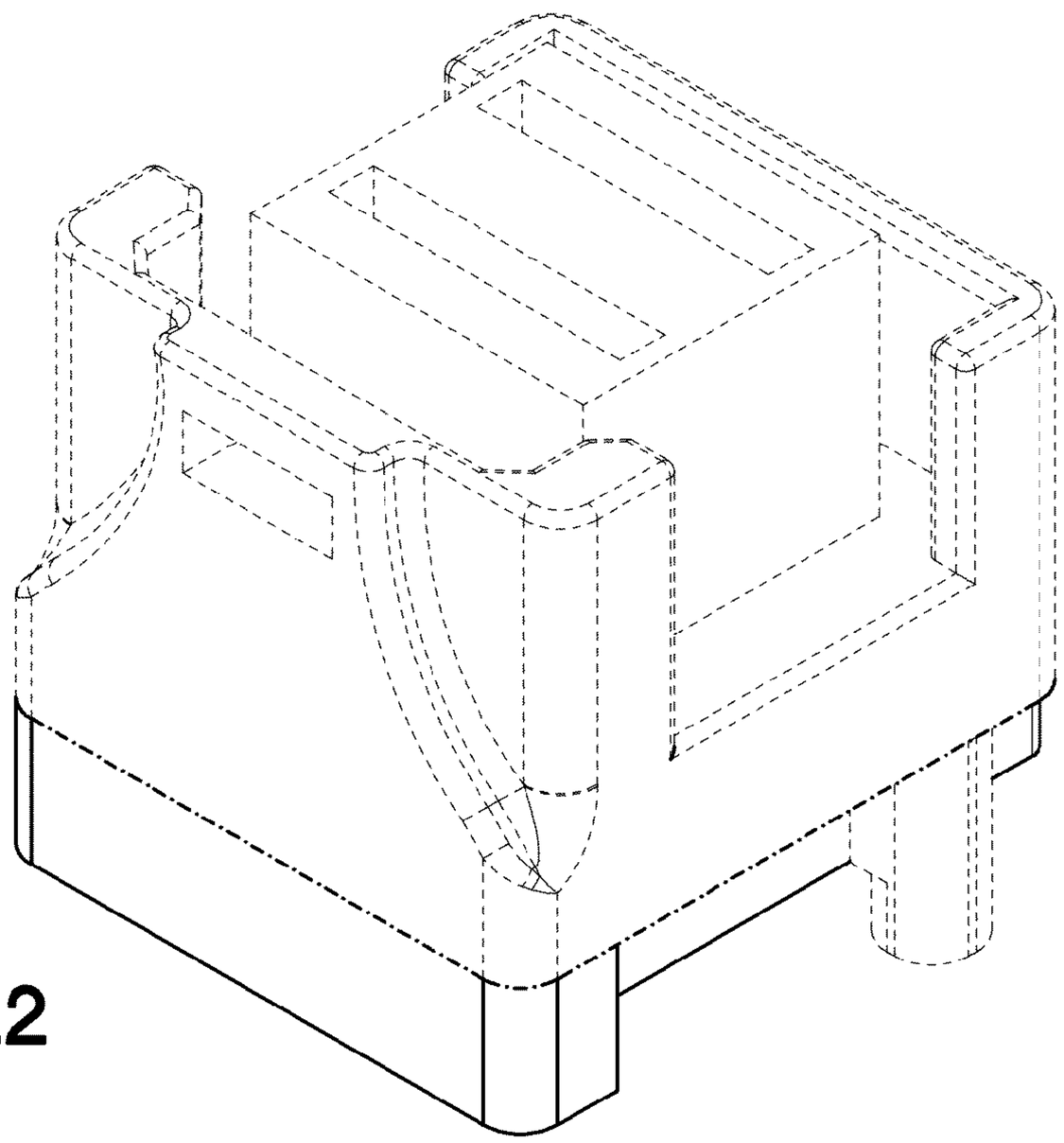

Fig.2

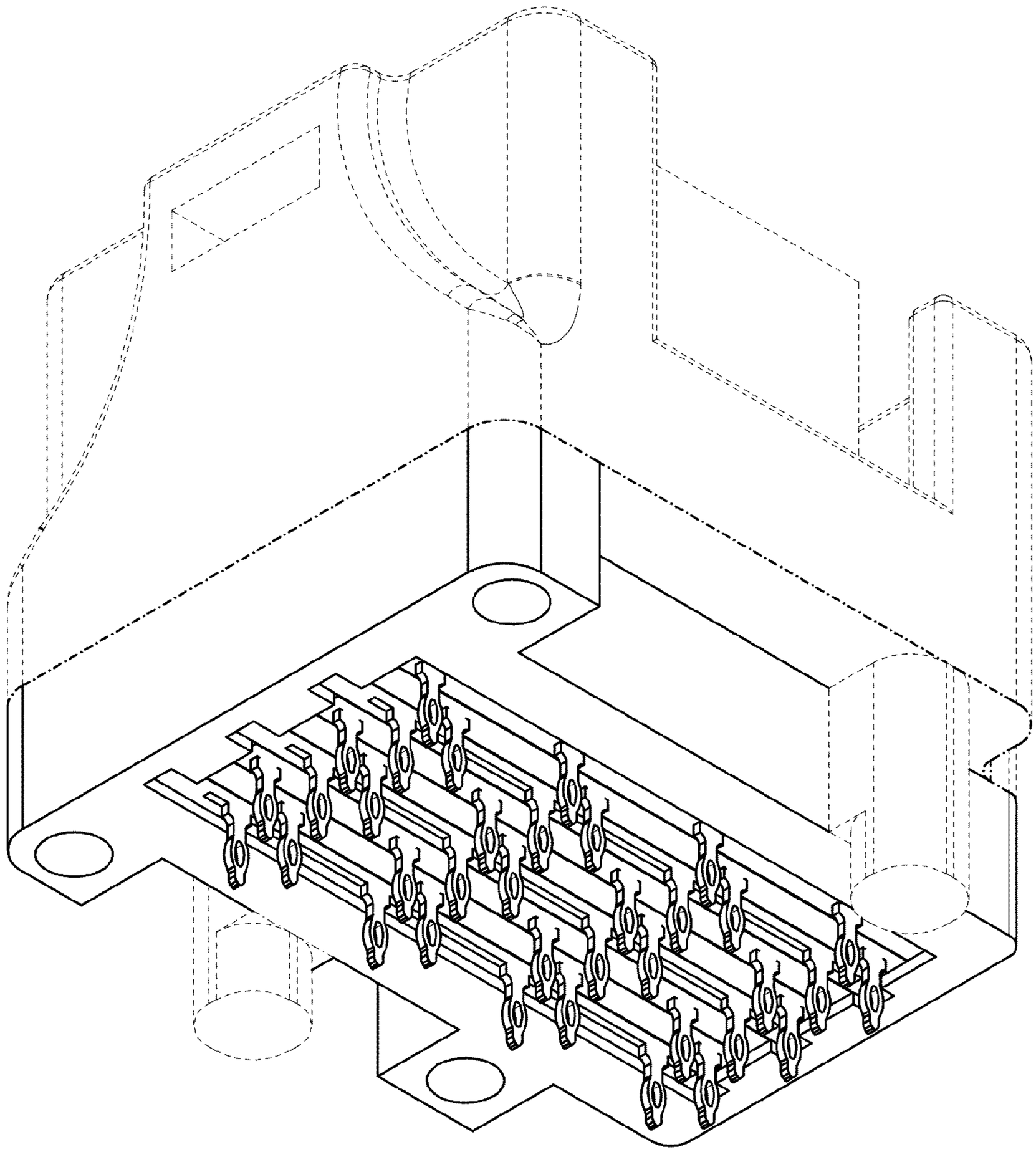

Fig.3

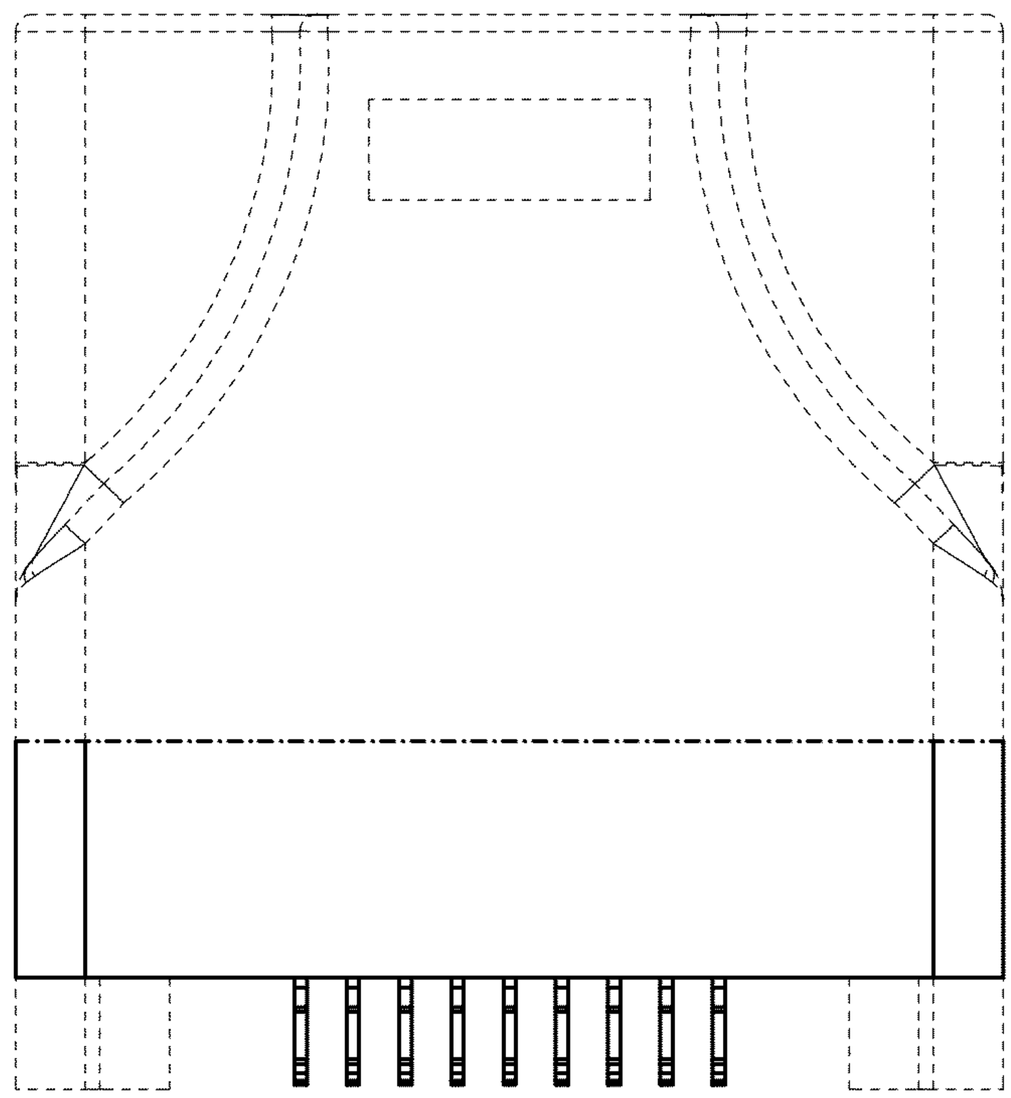

Fig.4

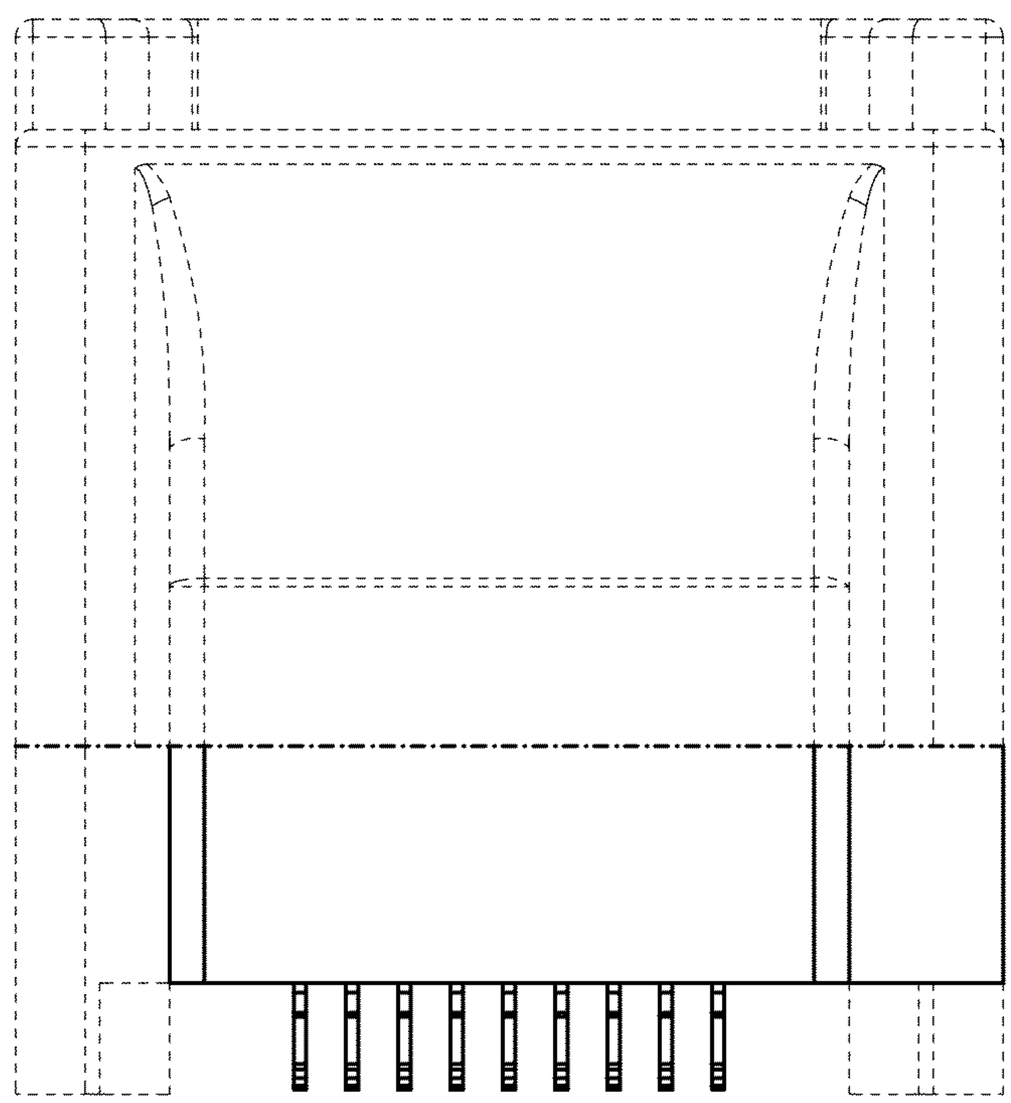

Fig.5

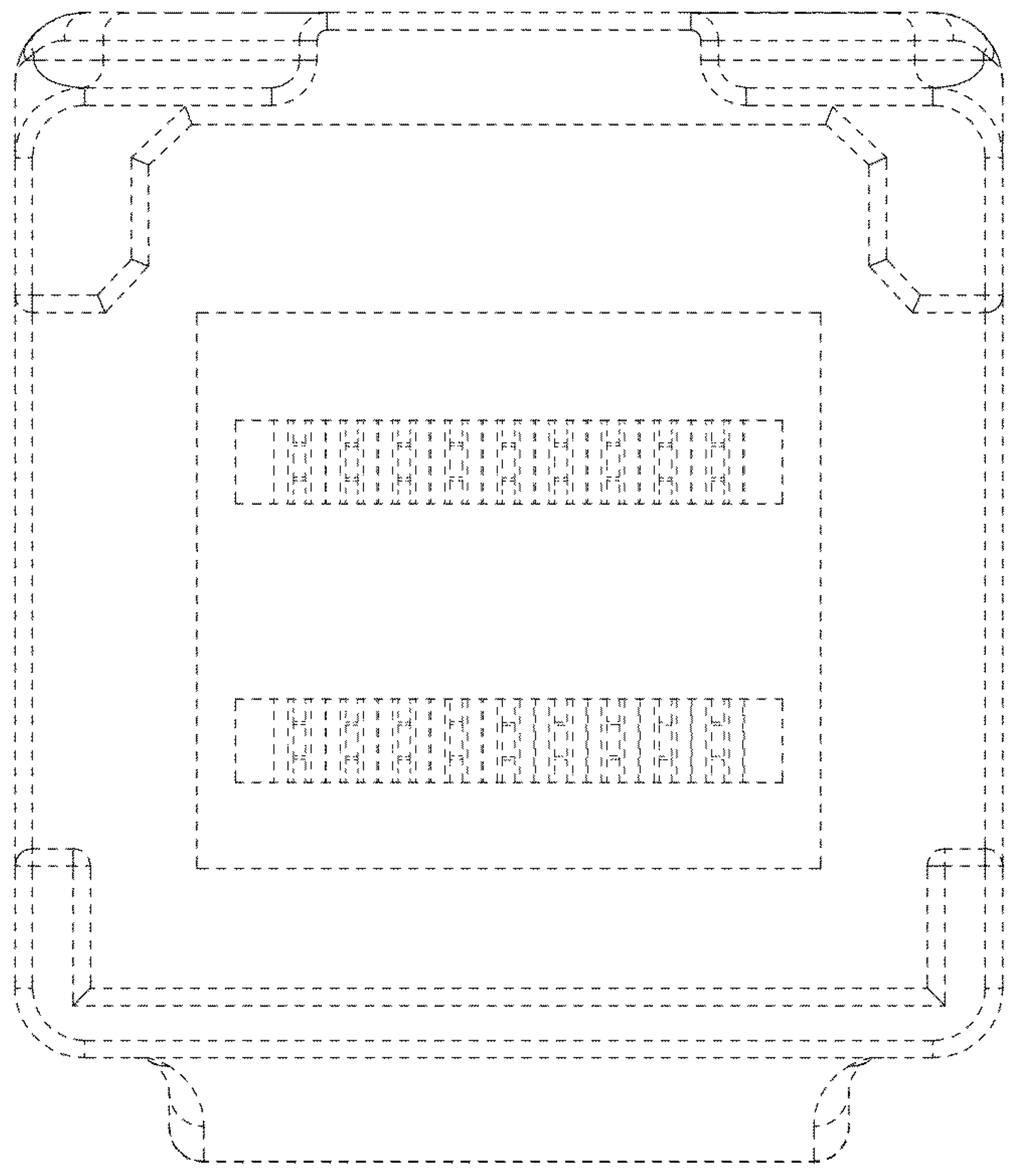

Fig.6

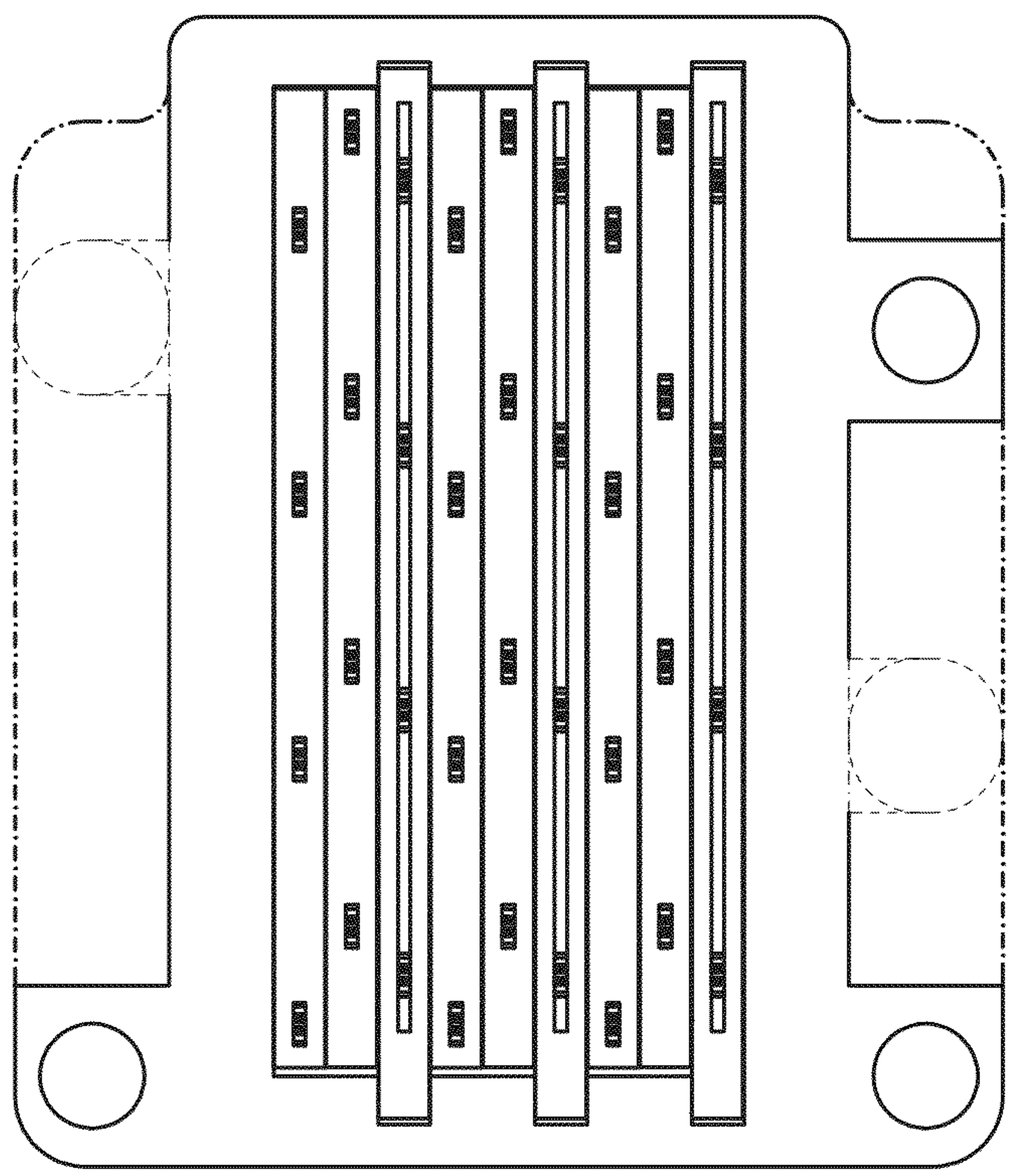

Fig.7

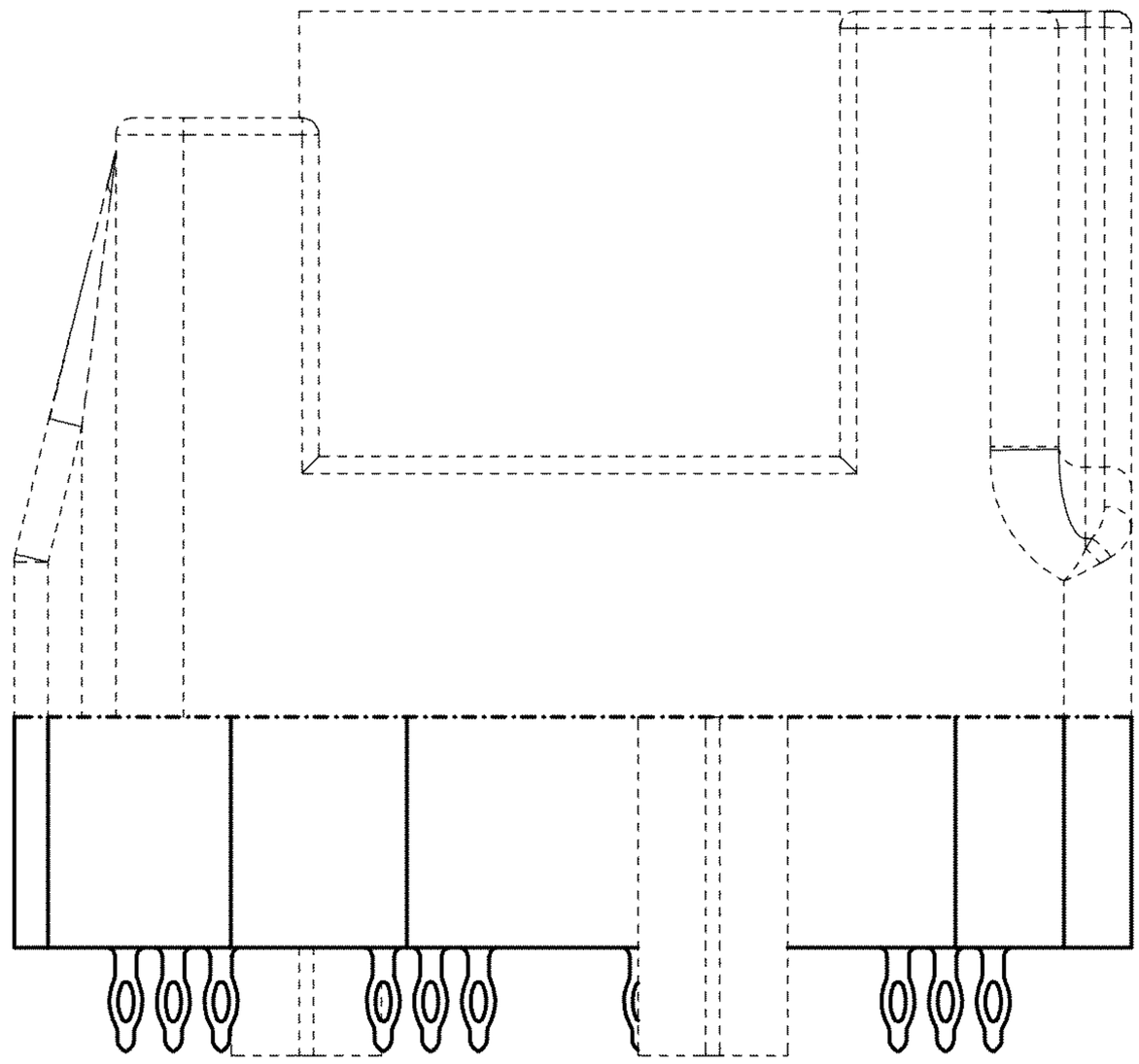

Fig.8

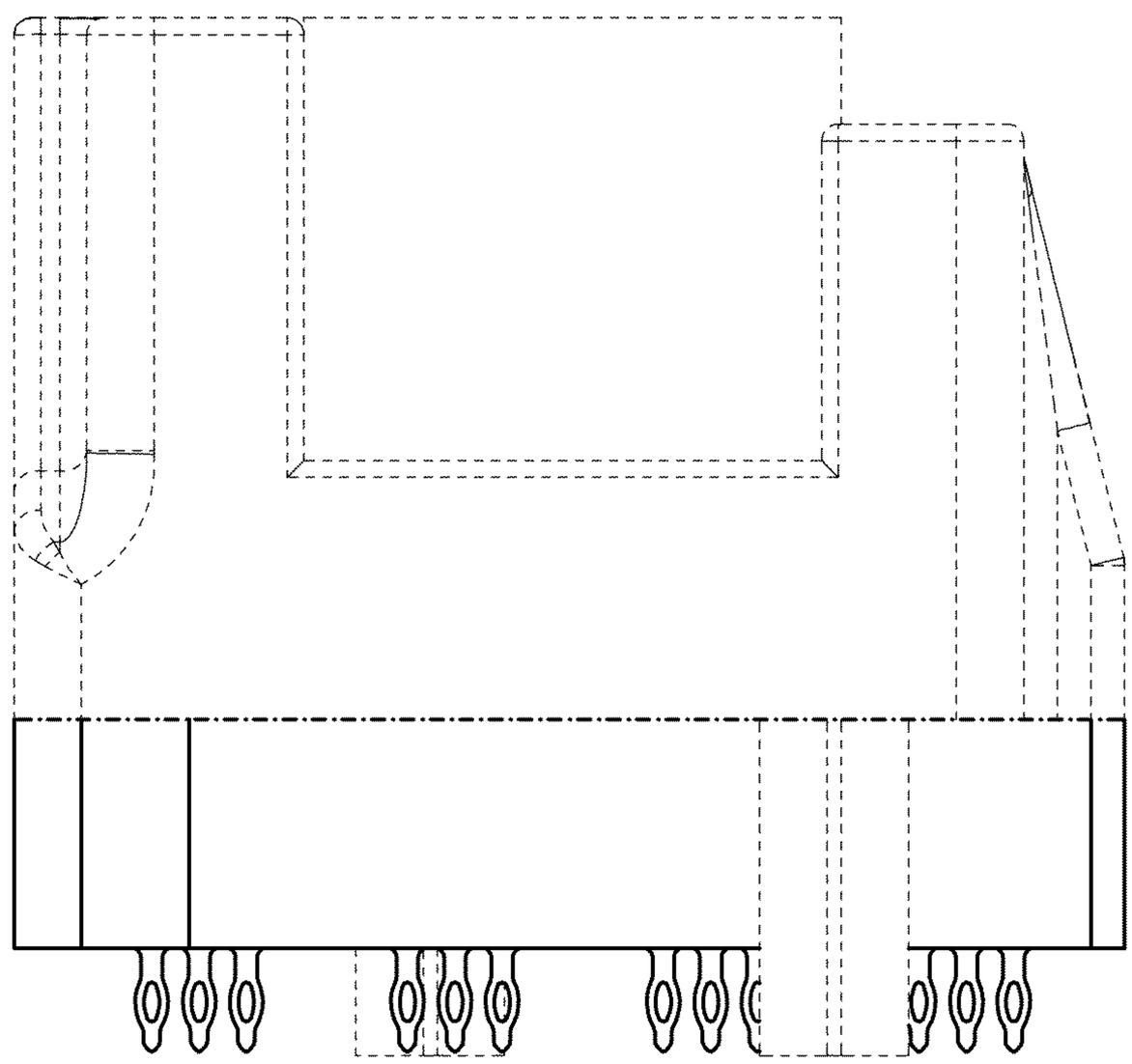

Fig.9