US00D740091S

(12) United States Design Patent

Mochizuki et al.

(10) Patent No.: US D740,091 S
(45) Date of Patent: ** Oct. 6, 2015

(54) **DESOLDERING TOOL**

(71) Applicant: **Hakko Corporation**, Osaka-shi, Osaka (JP)

(72) Inventors: **Toshikazu Mochizuki**, Osaka (JP); **Aiko Wakamatsu**, Osaka (JP)

(73) Assignee: **Hakko Corporation**, Osaka-shi, Osaka (JP)

(**) Term: **14 Years**

(21) Appl. No.: **29/495,600**

(22) Filed: **Jul. 2, 2014**

(30) **Foreign Application Priority Data**

Jan. 14, 2014 (JP) D2014-000446

(51) **LOC (10) Cl.** **08-03**

(52) **U.S. Cl.**
USPC **D8/30**

(58) **Field of Classification Search**
USPC D8/14, 29.1, 29.2, 30, 68
CPC B23K 1/00; B23K 1/08; B23K 3/00; B23K 3/02
See application file for complete search history.

(56) **References Cited**

U.S. PATENT DOCUMENTS

2,882,380	A	*	4/1959	Campo	228/20.5
3,884,409	A	*	5/1975	Kaufman	228/20.5
4,574,994	A	*	3/1986	Rauchwerger	228/20.5
4,779,786	A	*	10/1988	Holdway	228/20.5
5,007,574	A	*	4/1991	Carlomagno et al.	228/20.5
5,143,272	A	*	9/1992	Carlomagno et al.	228/20.5
D348,593	S	*	7/1994	Fortune	D8/30
5,380,982	A	*	1/1995	Fortune	219/230
6,057,527	A	*	5/2000	Kilmer	219/227
6,127,656	A	*	10/2000	Kilmer et al.	219/227

FOREIGN PATENT DOCUMENTS

JP	869243	5/1993

OTHER PUBLICATIONS

Den-On Instruments Co., Ltd., Catalog for "The desoldering tool (SC-7000Z)" Jul. 2002.
Taiyo Electric Ind. Co., Ltd., printout of web site for "The desoldering tool (TP-100)" available at <http://www.goot.jp/suitori-rework/tp-100/> published on or before Jan. 14, 2014.

* cited by examiner

Primary Examiner — Phillip S Hyder
(74) *Attorney, Agent, or Firm* — Squire Patton Boggs (US LLP

(57) **CLAIM**

The ornamental design for a desoldering tool, as shown and described.

DESCRIPTION

FIG. **1** is a first perspective view of a desoldering tool;
FIG. **2** is a second perspective view thereof;
FIG. **3** is a front view thereof;
FIG. **4** is a rear view thereof;
FIG. **5** is a left side view thereof;
FIG. **6** is a right side view thereof;
FIG. **7** is a top view thereof; and,
FIG. **8** is a bottom view thereof.
The broken lines depict portions of the desoldering tool in which the design is embodied that are not considered part of the claimed design.
The dashed lines show a borderline between the claimed design and other portion.

1 Claim, 6 Drawing Sheets

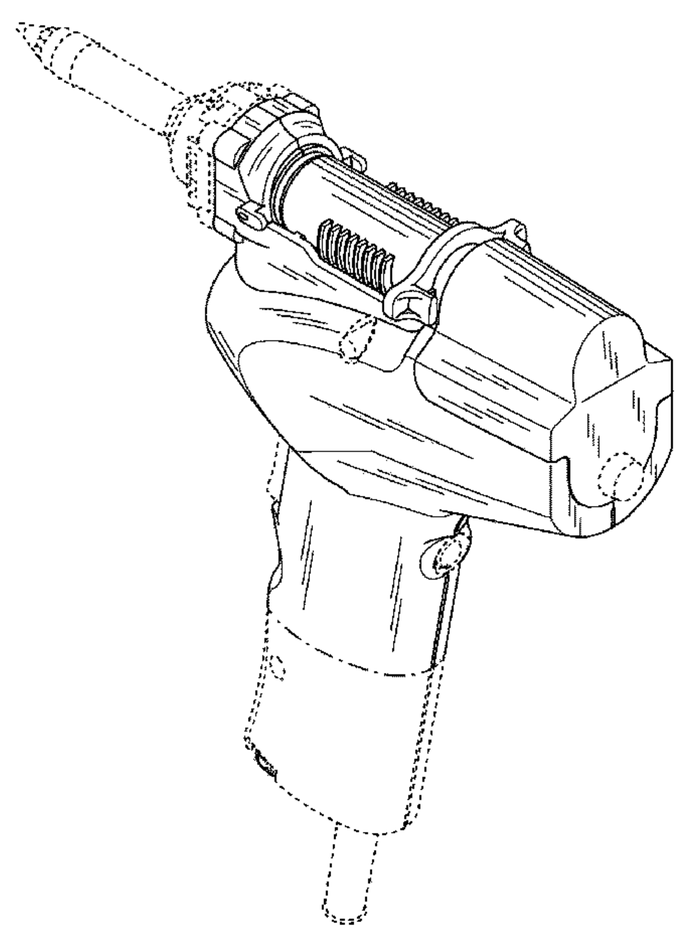

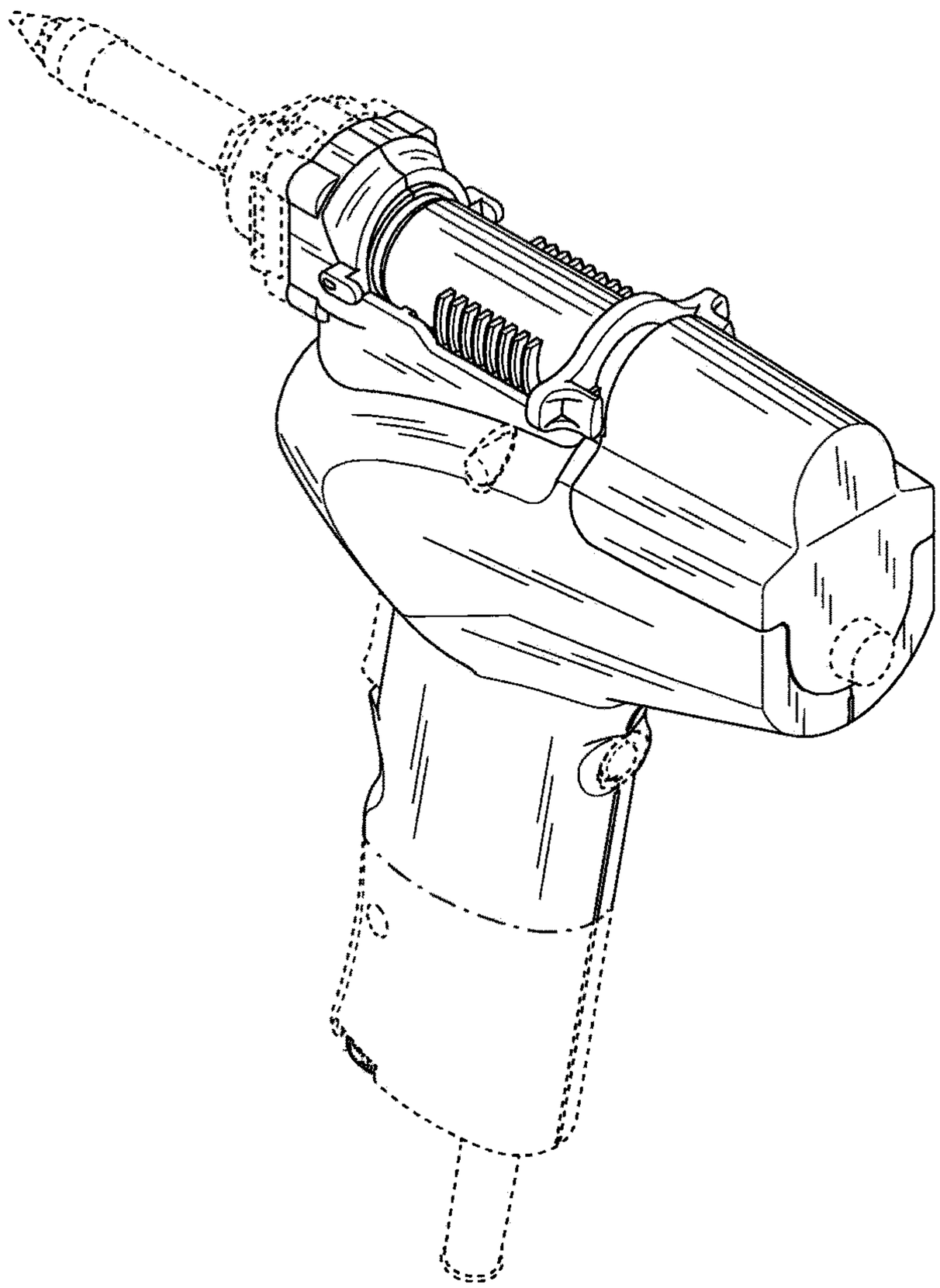

FIG.1

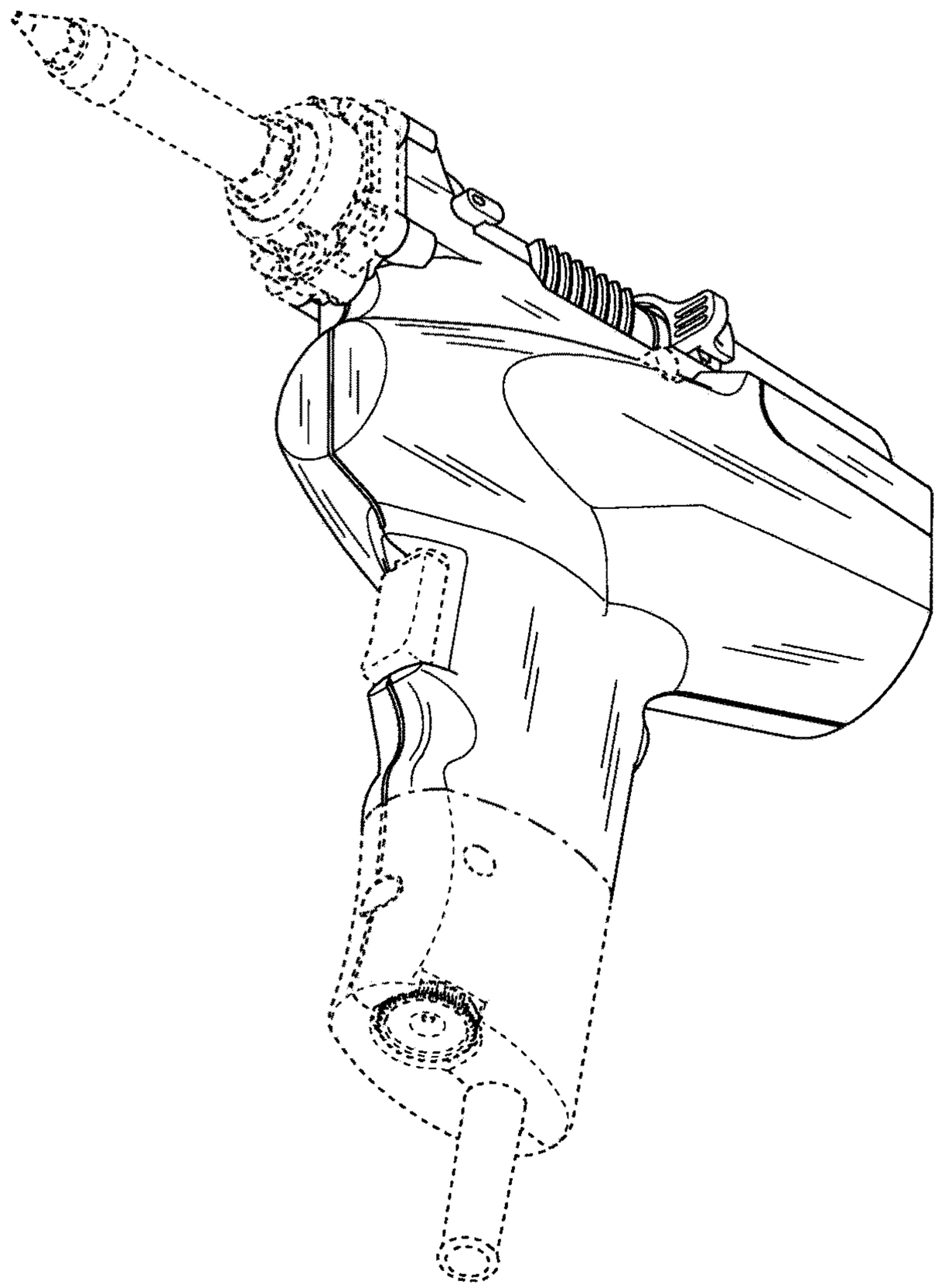

FIG.2

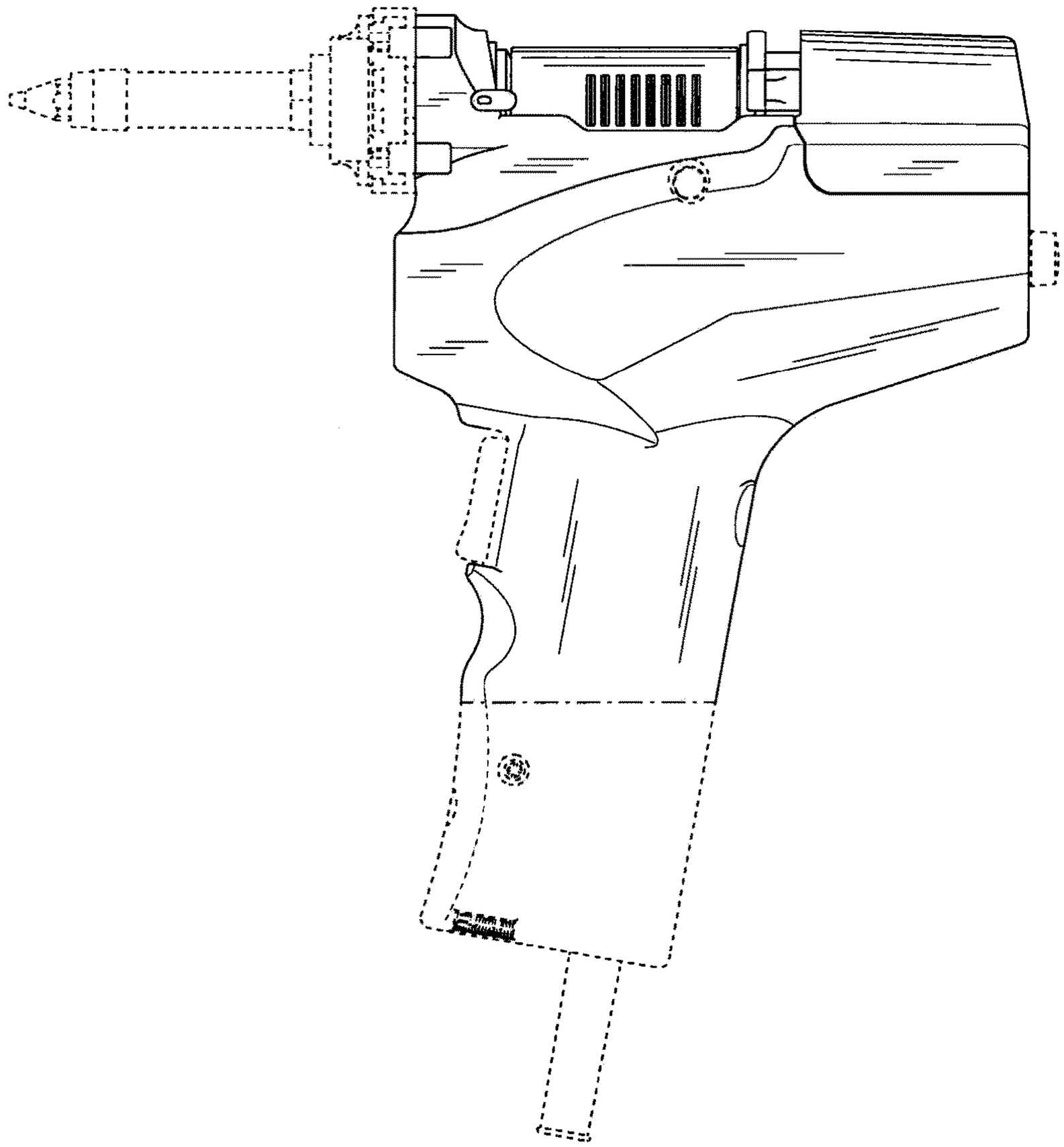

FIG.3

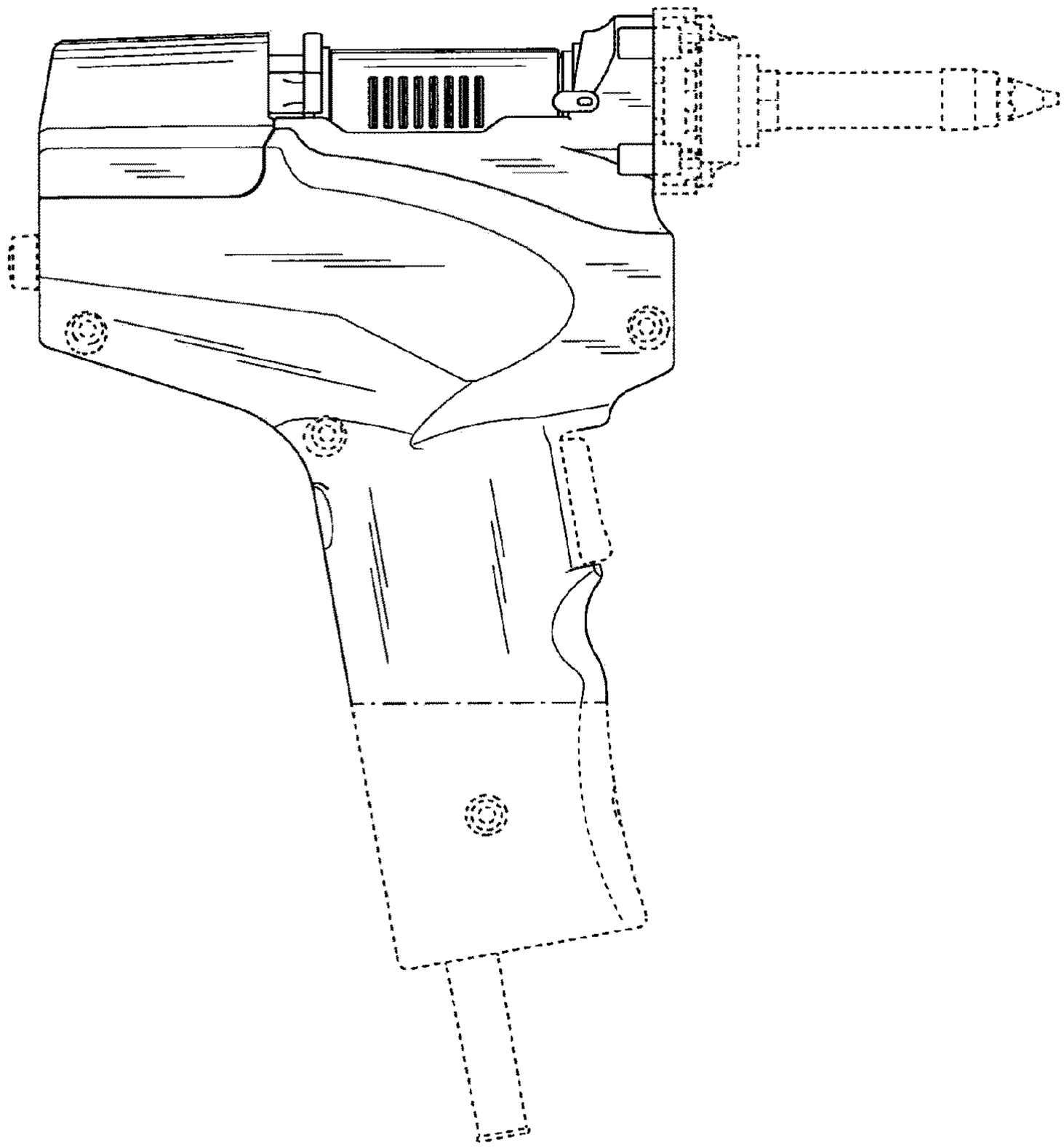

FIG.4

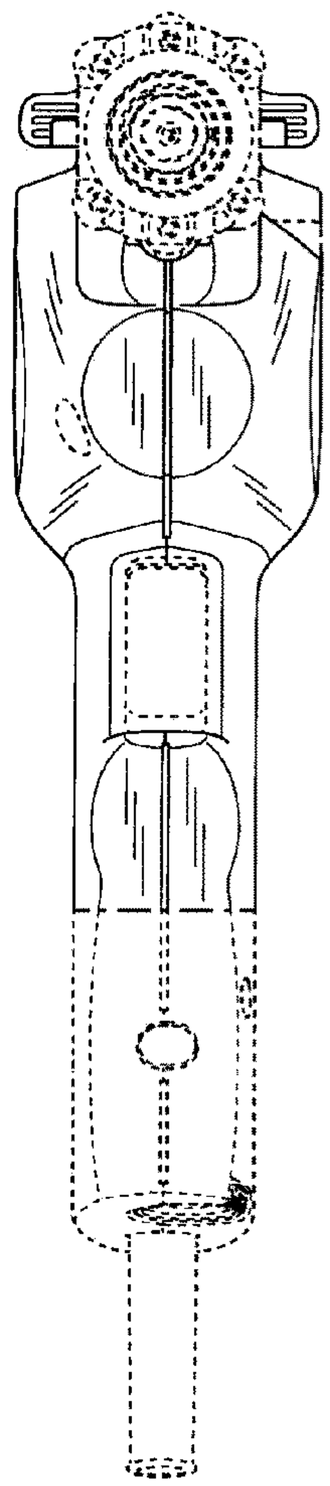

FIG.5

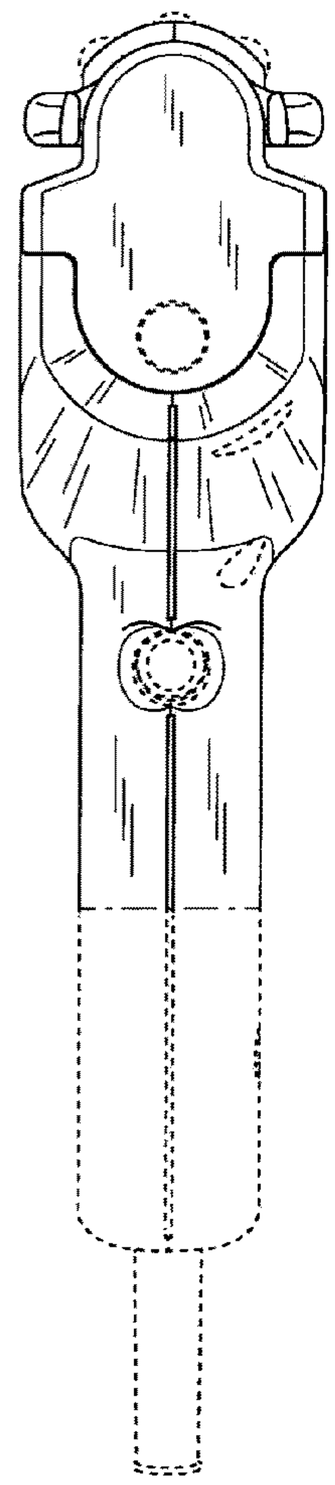

FIG.6

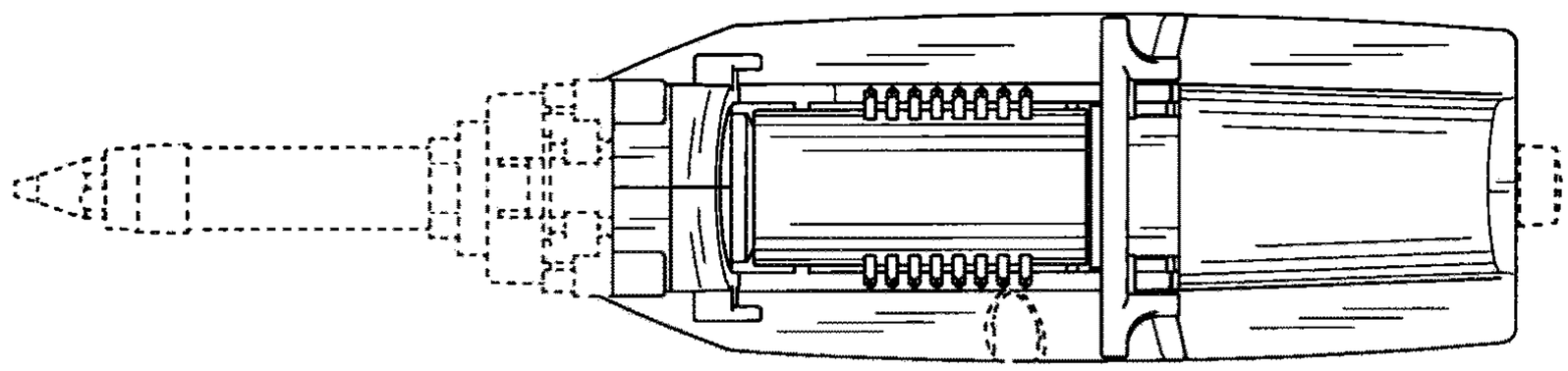

FIG.7

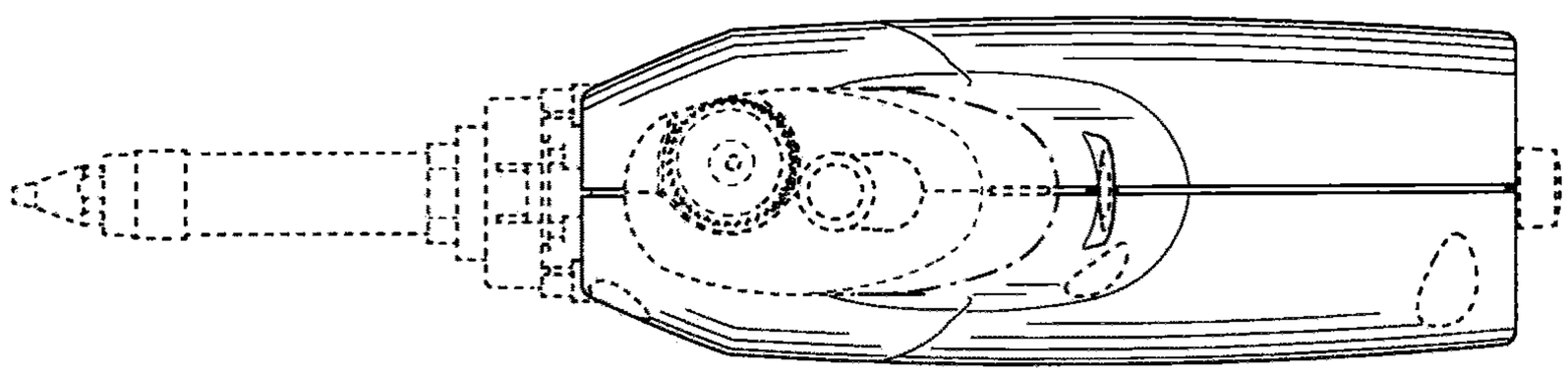

FIG.8