US00D739679S

(12) United States Design Patent

Benoit et al.

(10) Patent No.: US D739,679 S
(45) Date of Patent: ** Sep. 29, 2015

(54) **FOOD PROCESSOR ATTACHMENT**

(71) Applicant: **Whirlpool Corporation**, Benton Harbor, MI (US)

(72) Inventors: **Kaitlyn M. Benoit**, St. Joseph, MI (US); **Leif A. Norland**, St. Joseph, MI (US)

(73) Assignee: **Whirlpool Corporation**, Benton Harbor, MI (US)

(**) Term: **14 Years**

(21) Appl. No.: **29/485,056**

(22) Filed: **Mar. 14, 2014**

(51) **LOC (10) Cl.** **31-00**

(52) **U.S. Cl.**
USPC **D7/412**; D7/376; D7/378; D7/379; D7/384

(58) **Field of Classification Search**
USPC D7/372–373, 376–386, 412–413, 602, D7/629, 665–666, 669, 679, 693–694; 99/484, 509–511; 209/355, 358; 241/92, 98, 100, 101.01–101.2, 241/166–169.1, 274–278.2, 285.1–285.3, 241/291, 292.1; 366/64–65, 97–98, 100, 366/130, 182.4, 197–201, 205–207, 366/219–220, 341–343
CPC A21C 1/02; A21C 1/04; A23N 1/00; A23N 1/02; A47J 43/04; A47J 43/25; A47J 43/27; A47J 43/042; A47J 43/044; A47J 43/046; A47J 43/07; A47J 43/075; A47J 43/0705; A47J 43/0722; A47J 43/0727; A47J 44/02; B01F 3/00; B01F 3/0807; B01F 3/0853; B01F 7/1605; B01F 13/0059; B01F 13/0064; B02C 1/08; B02C 2/04; B02C 4/42; B02C 4/142; B02C 4/143; B02C 4/423; B02C 13/1835; B02C 5/10; B02C 5/12; B02C 5/14; B02C 5/16
See application file for complete search history.

(56) **References Cited**

U.S. PATENT DOCUMENTS

D47,660	S	*	7/1915	Wear et al.	D7/373
2,003,259	A	*	5/1935	Gilbert et al.	99/484
2,069,506	A	*	2/1937	Ross	366/200
2,537,852	A	*	1/1951	Peterson	209/355
2,710,098	A	*	6/1955	Tilton	209/358
D310,153	S	*	8/1990	Kaiser	D7/412
D643,265	S	*	8/2011	Kim et al.	D7/665
D660,660	S	*	5/2012	Kim	D7/666
D670,138	S	*	11/2012	Hu	D7/665
D698,210	S	*	1/2014	Lavy et al.	D7/665
D718,094	S	*	11/2014	Yan	D7/665
2009/0175123	A1	*	7/2009	Membreno	366/182.4
2014/0263783	A1	*	9/2014	Benoit et al.	241/100

* cited by examiner

Primary Examiner — Ricky Pham

(57) **CLAIM**

We claim the ornamental design for a food processor attachment, as shown and described.

DESCRIPTION

FIG. **1** is a front perspective view of the food processor attachment of the present disclosure;
FIG. **2** is a rear perspective view of the food processor attachment of FIG. **1**;
FIG. **3** is a front elevational view of the food processor attachment of FIG. **1**;
FIG. **4** is a rear elevational view of the food processor attachment of FIG. **1**;
FIG. **5** is a first side elevational view of the food processor attachment of FIG. **1**;
FIG. **6** is a second side elevational view of food processor attachment of FIG. **1**;
FIG. **7** is a top plan view of the food processor attachment of FIG. **1**; and,
FIG. **8** is a bottom plan view of the food processor attachment of FIG. **1**.
The broken lines shown in the drawings are for illustrative purposes only and form no part of the claimed design.

1 Claim, 6 Drawing Sheets

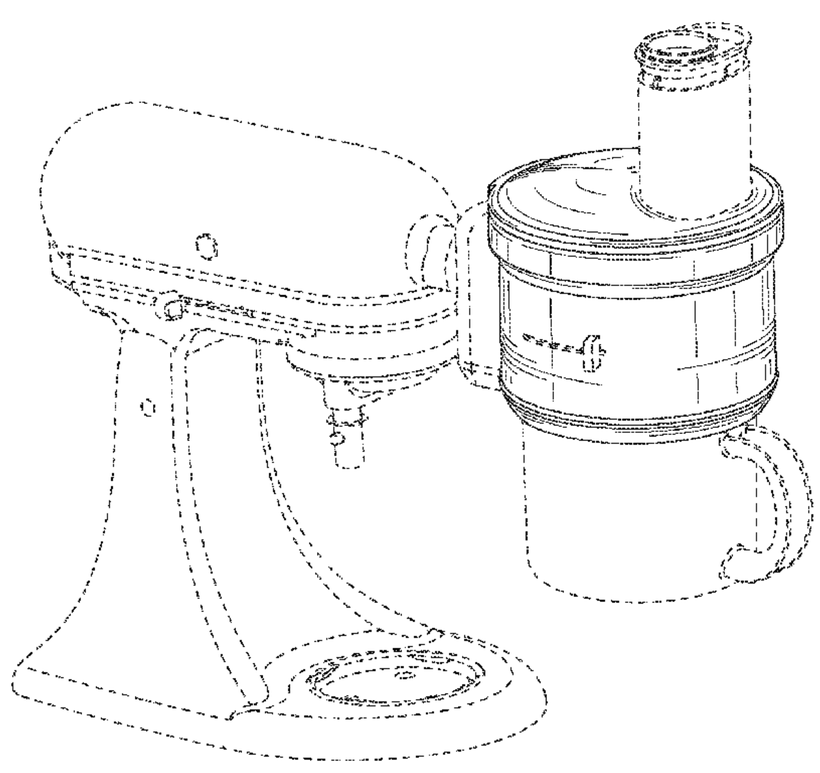

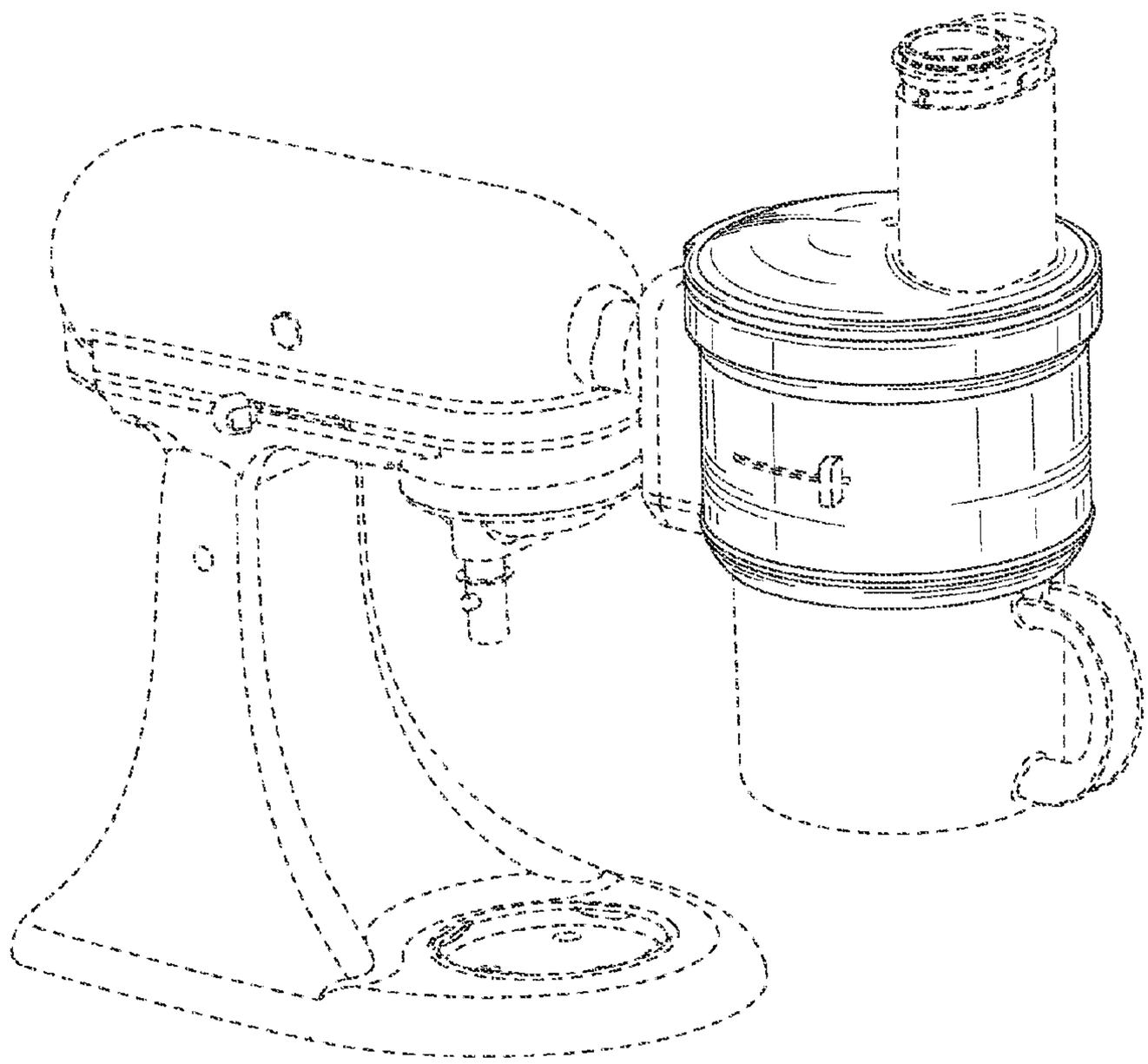

FIG. 1

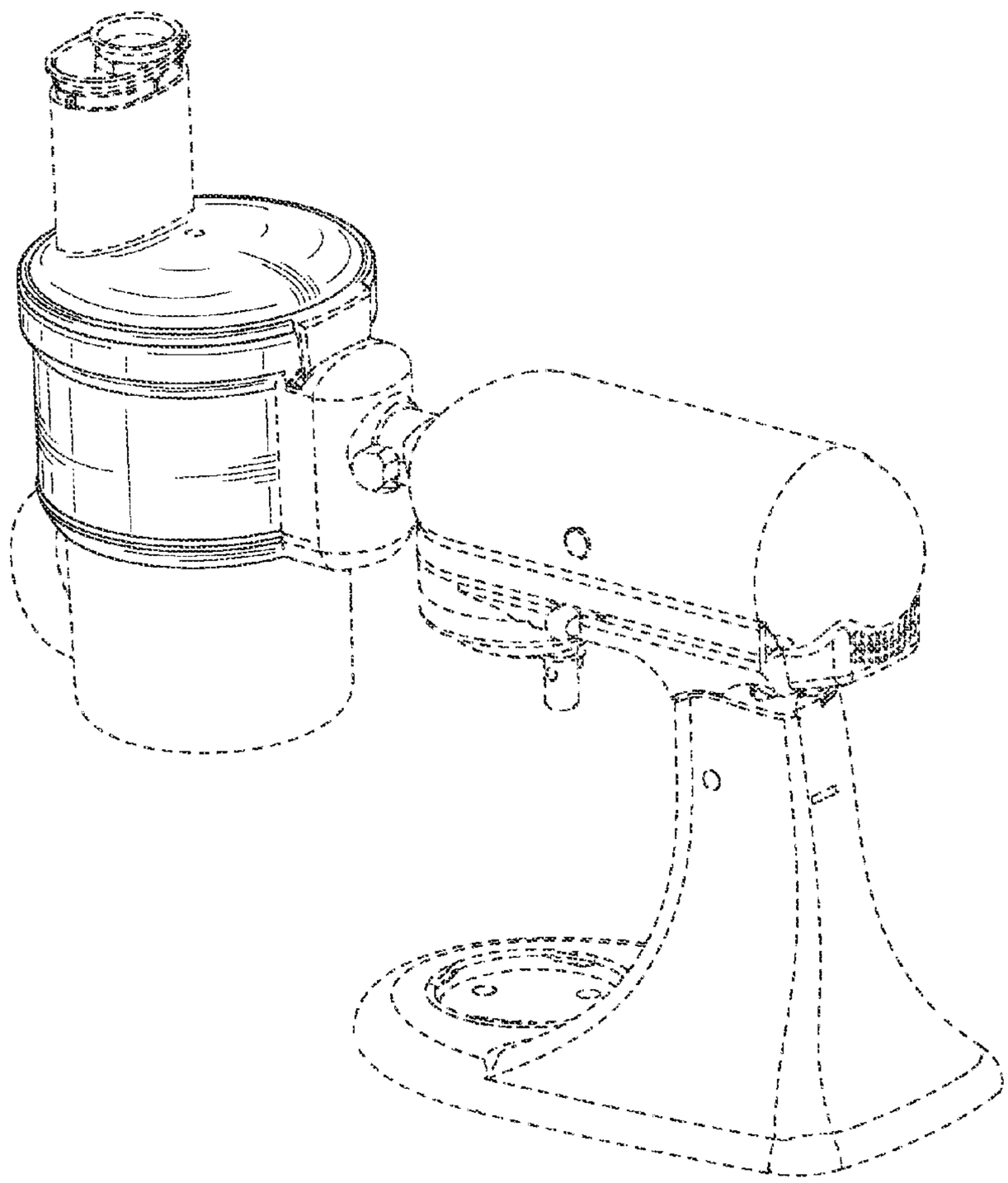

FIG. 2

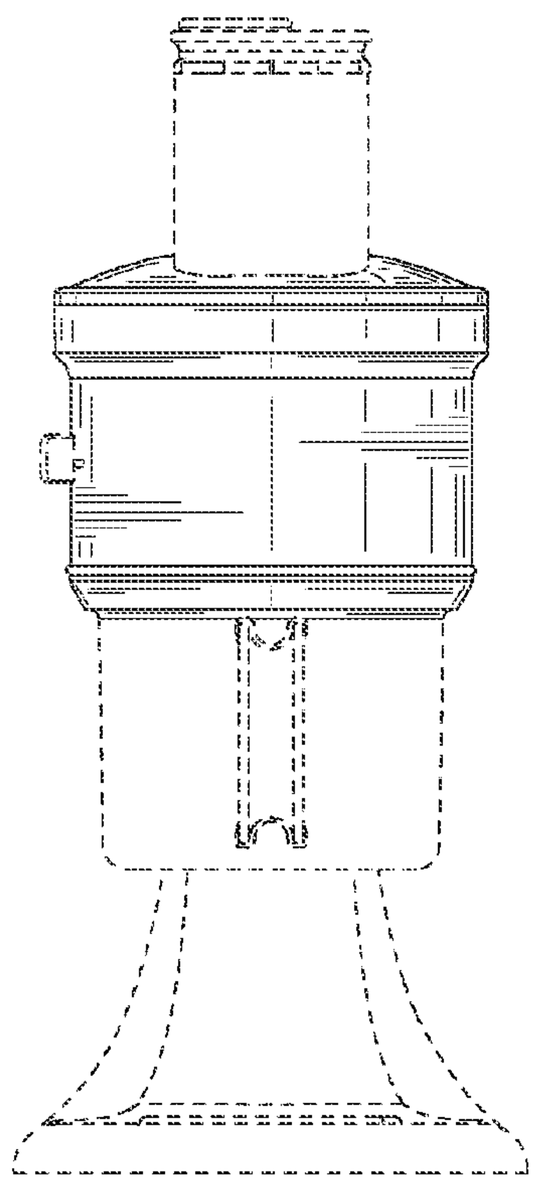

FIG. 3

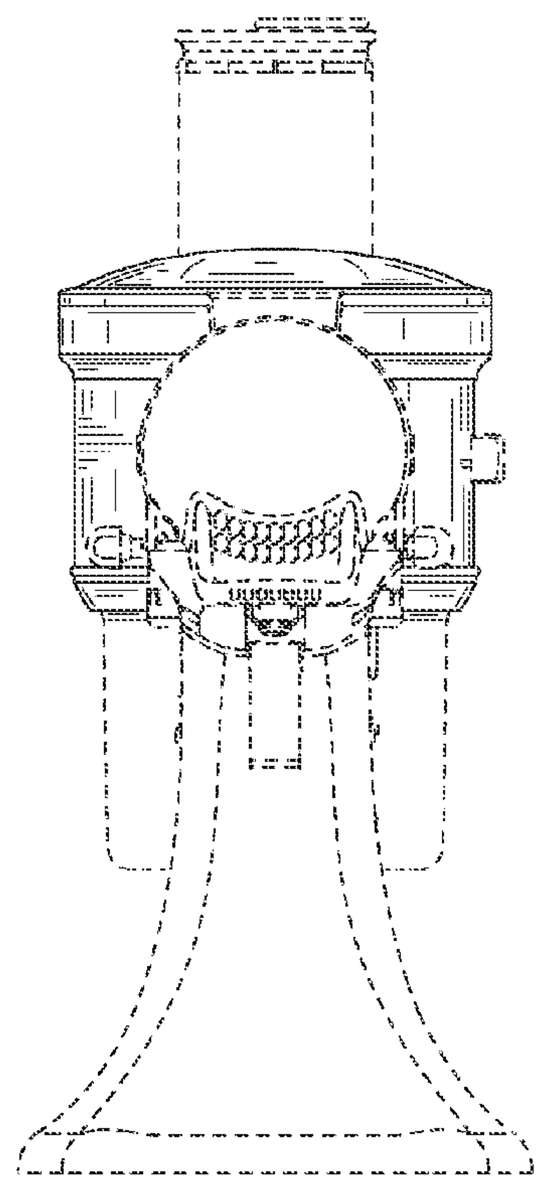

FIG. 4

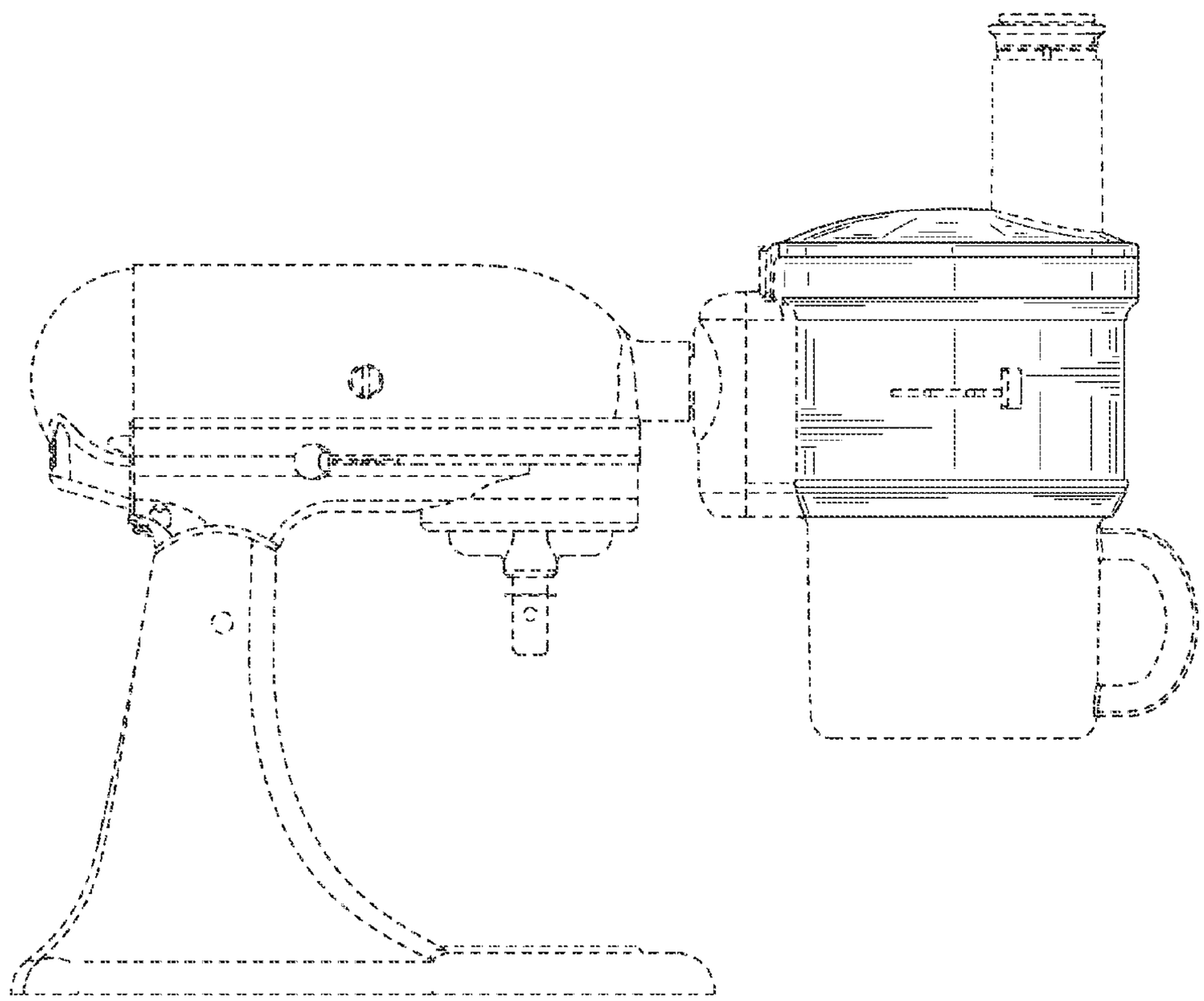

FIG. 5

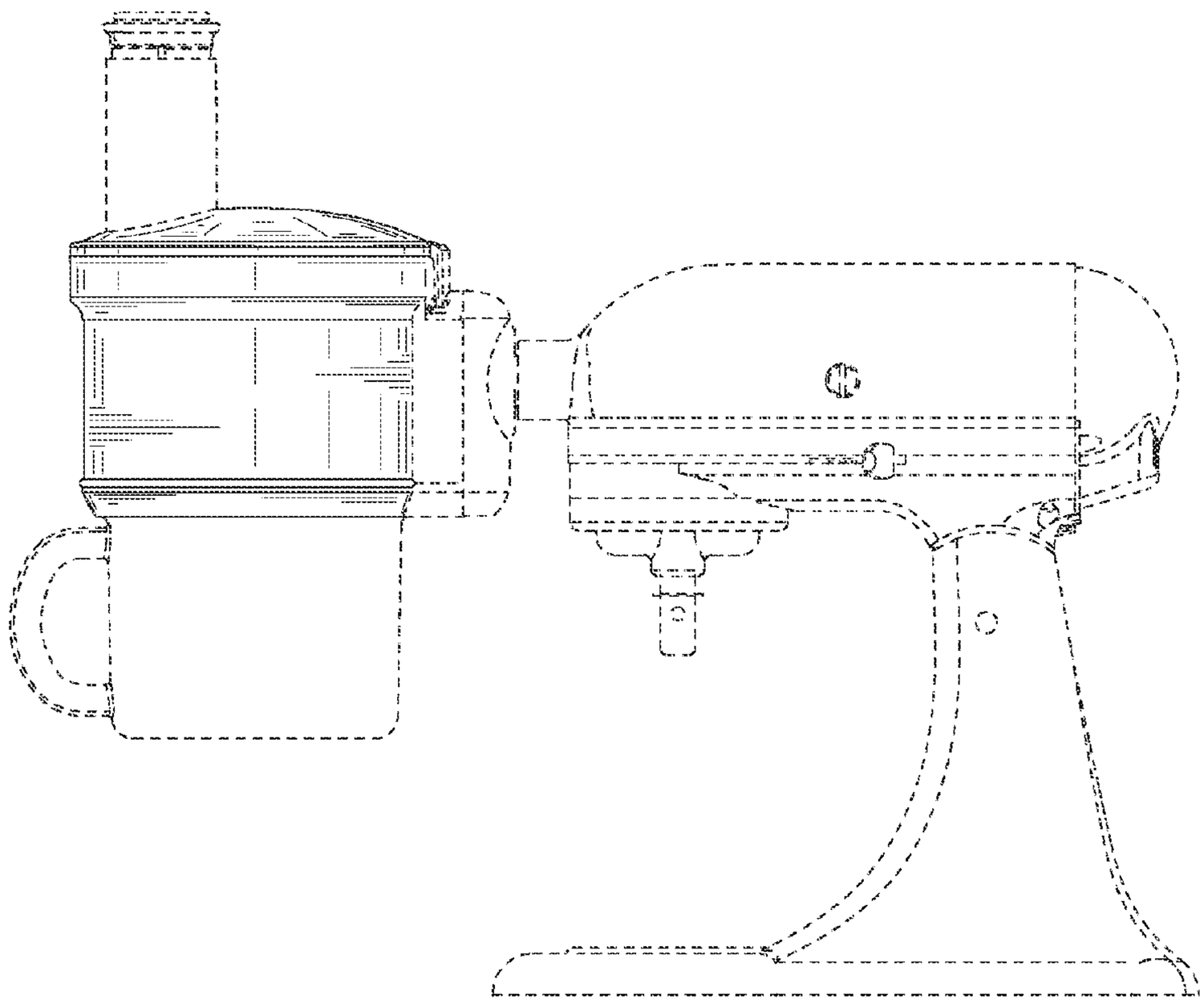

FIG. 6

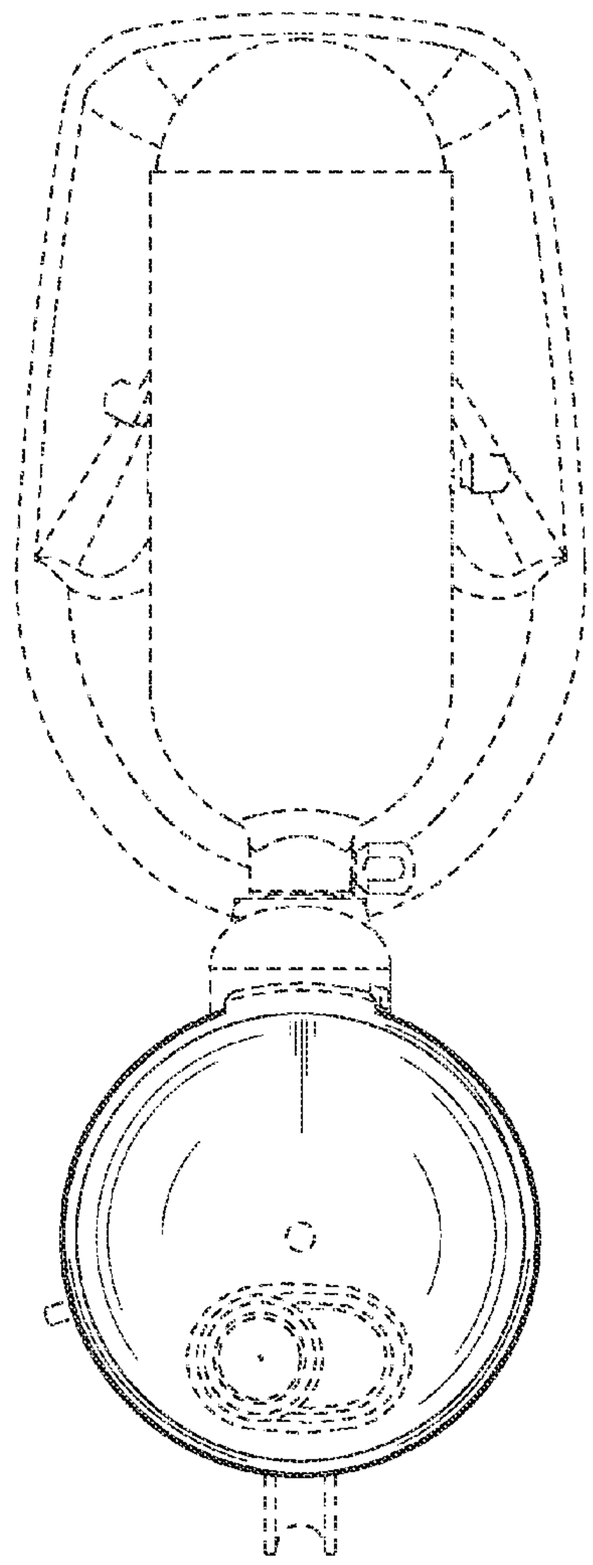

FIG. 7

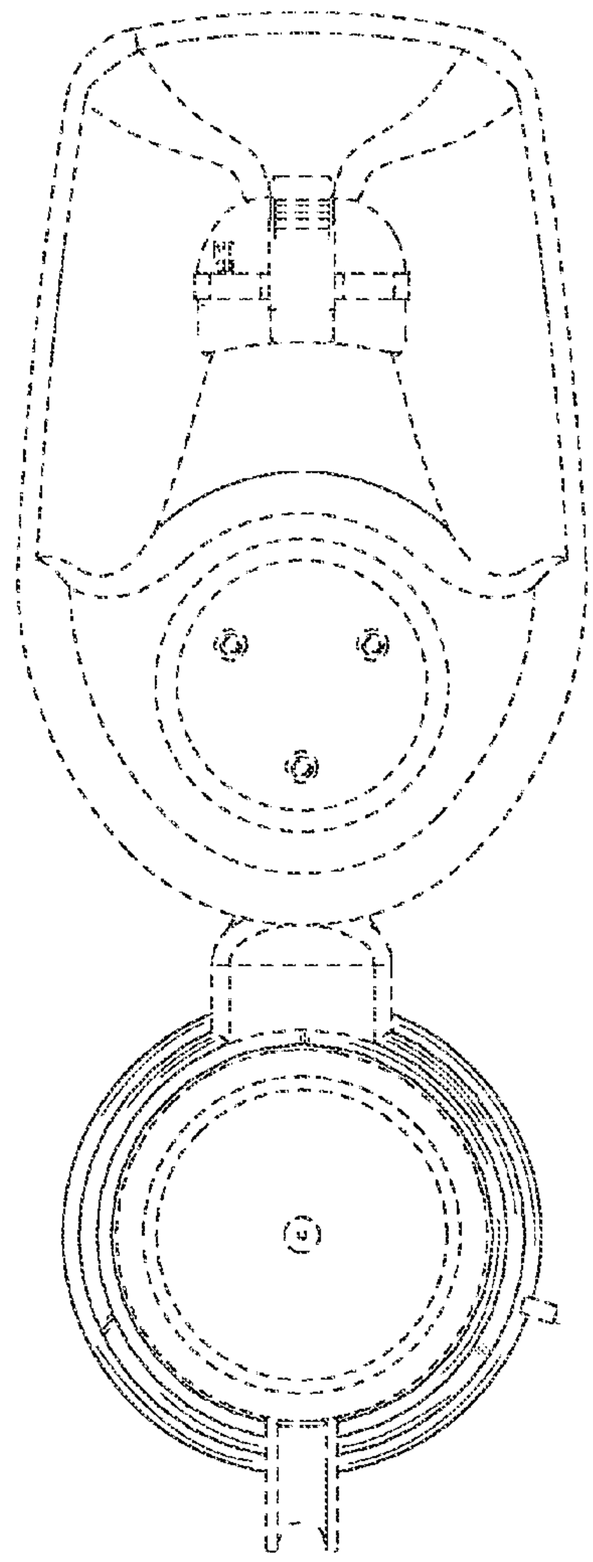

FIG. 8