US00D739557S

(12) United States Design Patent
Buente

(10) **Patent No.: US D739,557 S**
(45) **Date of Patent: ** Sep. 22, 2015**

(54) **RAILING SECTION**

(71) Applicant: **Westech Building Products, Inc.**, Houston, TX (US)

(72) Inventor: **Beau Buente**, Mount Vernon, IN (US)

(73) Assignee: **WESTECH BUILDING PRODUCTS, INC.**, Houston, TX (US)

(**) Term: **14 Years**

(21) Appl. No.: **29/482,877**

(22) Filed: **Feb. 22, 2014**

(51) **LOC (10) Cl.** **25-02**

(52) **U.S. Cl.**
USPC **D25/38.1**

(58) **Field of Classification Search**
USPC D25/38.1, 39, 42, 48.1; D30/108
CPC E04H 17/1413; E04H 2017/1452; E04H 17/1443; E04H 17/143; E04H 17/1417; E04H 17/1421; E04H 2017/146; E04H 17/00; E04H 17/18; E04H 12/2215; E04H 17/22
See application file for complete search history.

(56) **References Cited**

U.S. PATENT DOCUMENTS

3,491,984	A *	1/1970	Nyberg	256/21
4,722,514	A	2/1988	Pettit	
5,026,028	A	6/1991	Ooi et al.	
5,215,290	A	6/1993	Khalessi	
5,873,671	A	2/1999	West	
5,967,498	A *	10/1999	Junell	256/19
5,971,365	A	10/1999	Pigott et al.	
6,039,307	A	3/2000	De Zen	
6,173,944	B1	1/2001	McCarthy	
6,471,192	B1 *	10/2002	Erwin	256/65.05
6,601,831	B2	8/2003	Erwin	
6,719,278	B2	4/2004	Bryan	
D502,550	S *	3/2005	Walker	D25/38.1
6,948,704	B2	9/2005	Forbis et al.	
7,125,002	B2	10/2006	Platt	
D543,638	S *	5/2007	Mertins	D25/38.1
D569,528	S *	5/2008	Carney	D25/38.1
7,374,154	B2	5/2008	Platt	
D573,724	S *	7/2008	Reed	D25/121
7,427,055	B2	9/2008	Platt	
D583,484	S *	12/2008	Ferris	D25/38.1
7,681,866	B2	3/2010	Lehmann	
D724,759	S *	3/2015	Tucker	D25/38.1
2002/0023406	A1	2/2002	Pettit et al.	
2003/0164486	A1 *	9/2003	West	256/65.1
2006/0081829	A1 *	4/2006	Platt	256/65.01
2006/0188323	A1 *	8/2006	Walker	403/19
2009/0200532	A1	8/2009	Platt	
2009/0212271	A1	8/2009	Platt	
2010/0108969	A1 *	5/2010	Platt	256/65.04

(Continued)

OTHER PUBLICATIONS

Internet search URL<http://www.westechbp.com/products/vinylgard-railing-systems/e-rail-railing[date searched Jun. 10, 2015].*

Primary Examiner — Philip S Hyder
Assistant Examiner — Keith Frank
(74) *Attorney, Agent, or Firm* — Abel Law Group, LLP

(57) **CLAIM**

The ornamental design for a railing section, as shown and described.

DESCRIPTION

FIG. **1** is an upper perspective view of a railing section showing my new design;
FIG. **2** is a lower perspective view thereof;
FIG. **3** is a front elevation view thereof; and,
FIG. **4** is a top plan view thereof.
The broken lines shown in drawings depict unclaimed subject matter in which the railing section is embodied and forms no part of the claimed design.
The present invention relates in general to railing and, in particular, to vinyl railing.

1 Claim, 4 Drawing Sheets

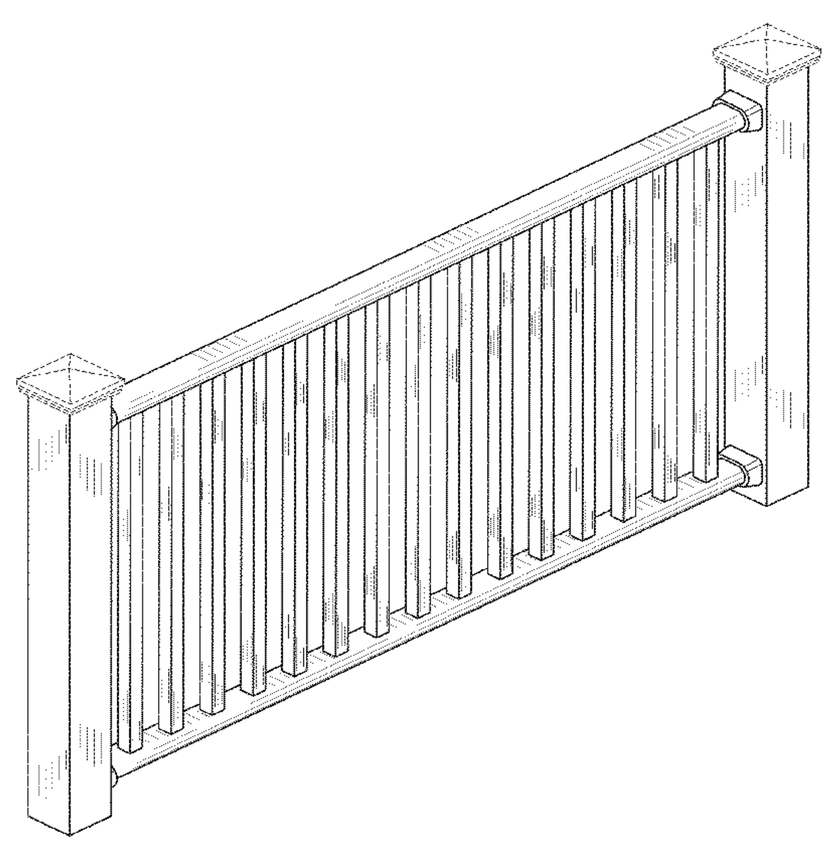

(56) **References Cited**

U.S. PATENT DOCUMENTS

2010/0237308 A1* 9/2010 Lo 256/26
2014/0061561 A1* 3/2014 Brit 256/1
2015/0115214 A1* 4/2015 Schneider et al. 256/67

* cited by examiner

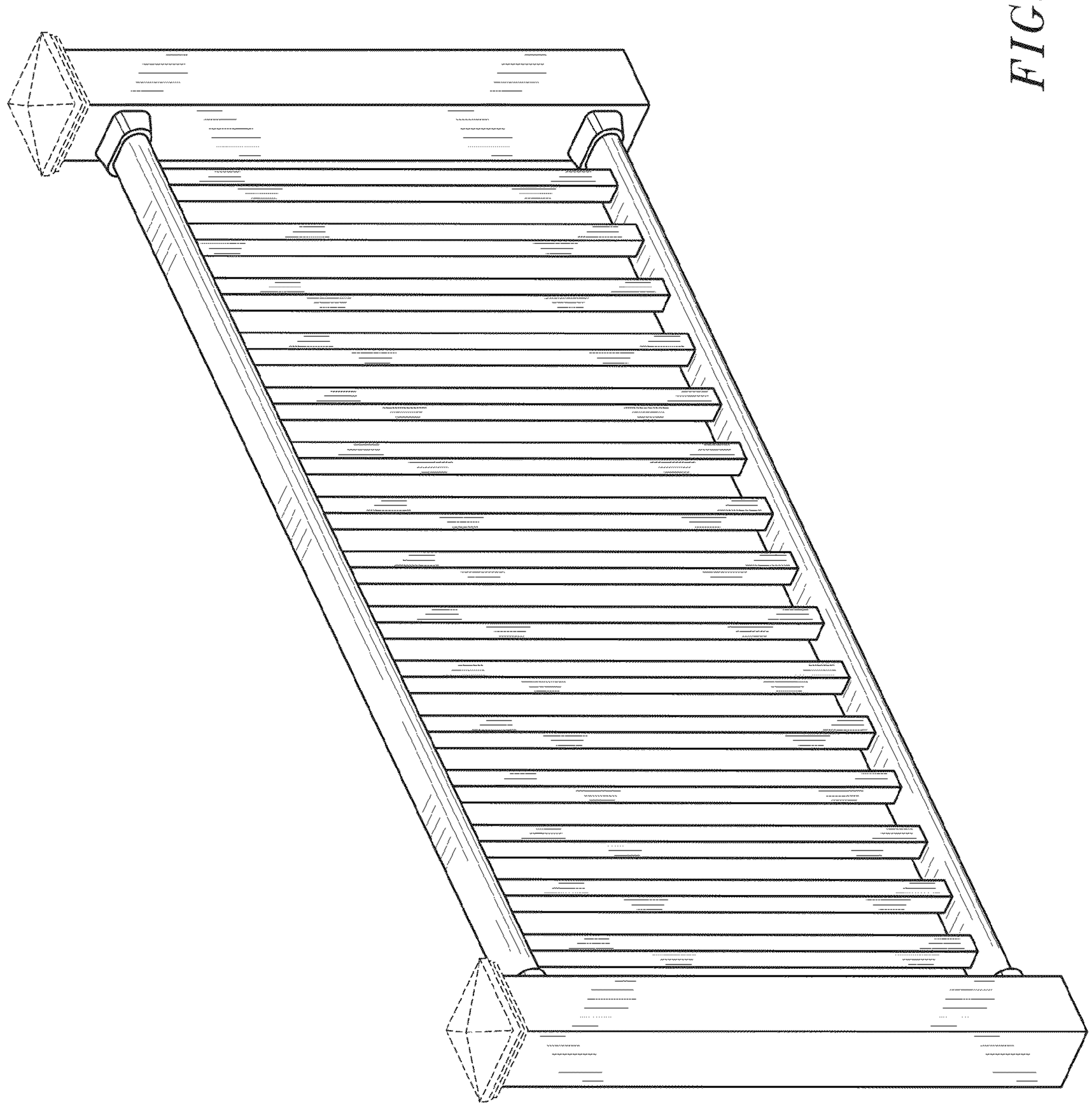

FIG. 1

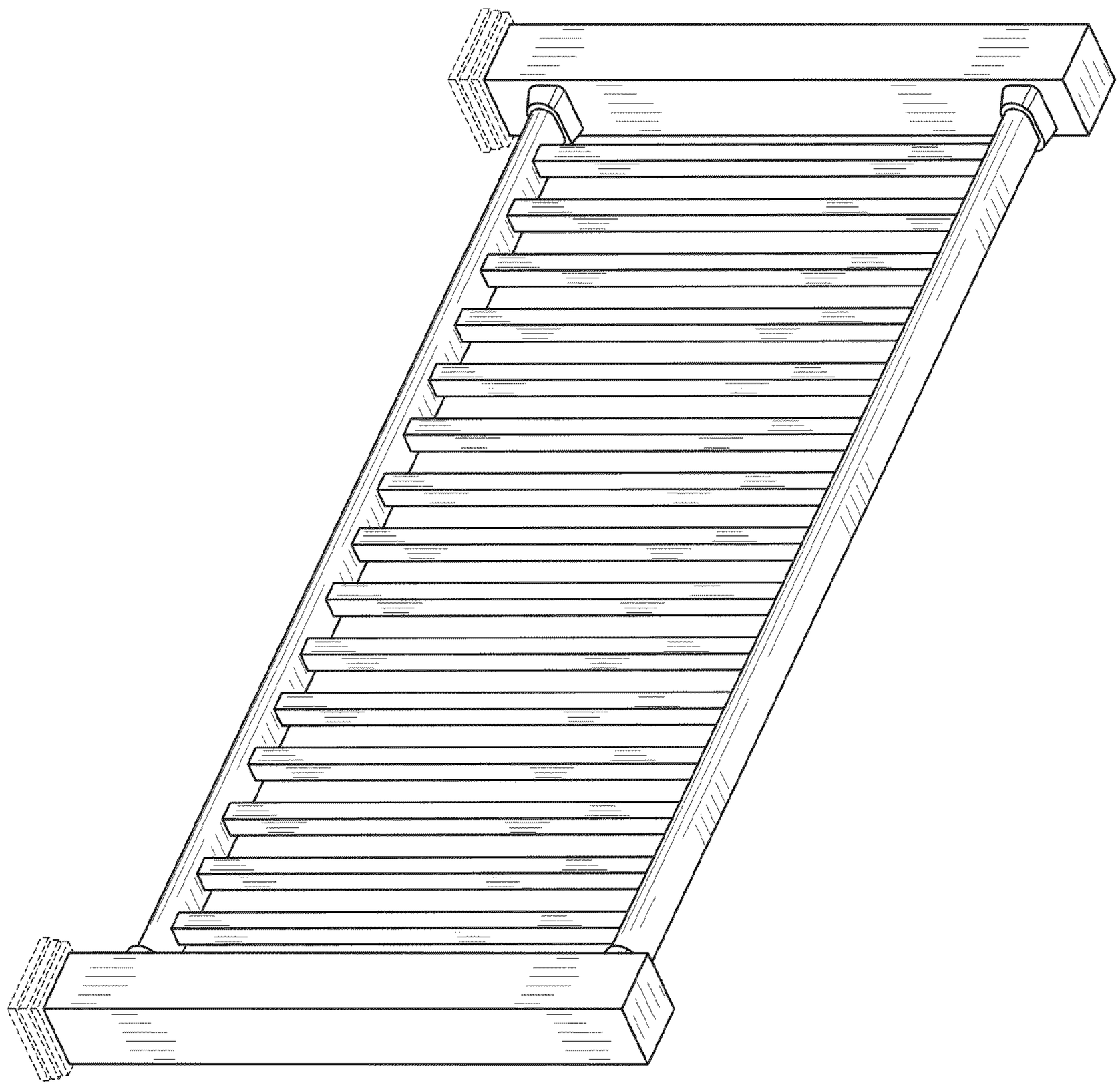

FIG. 2

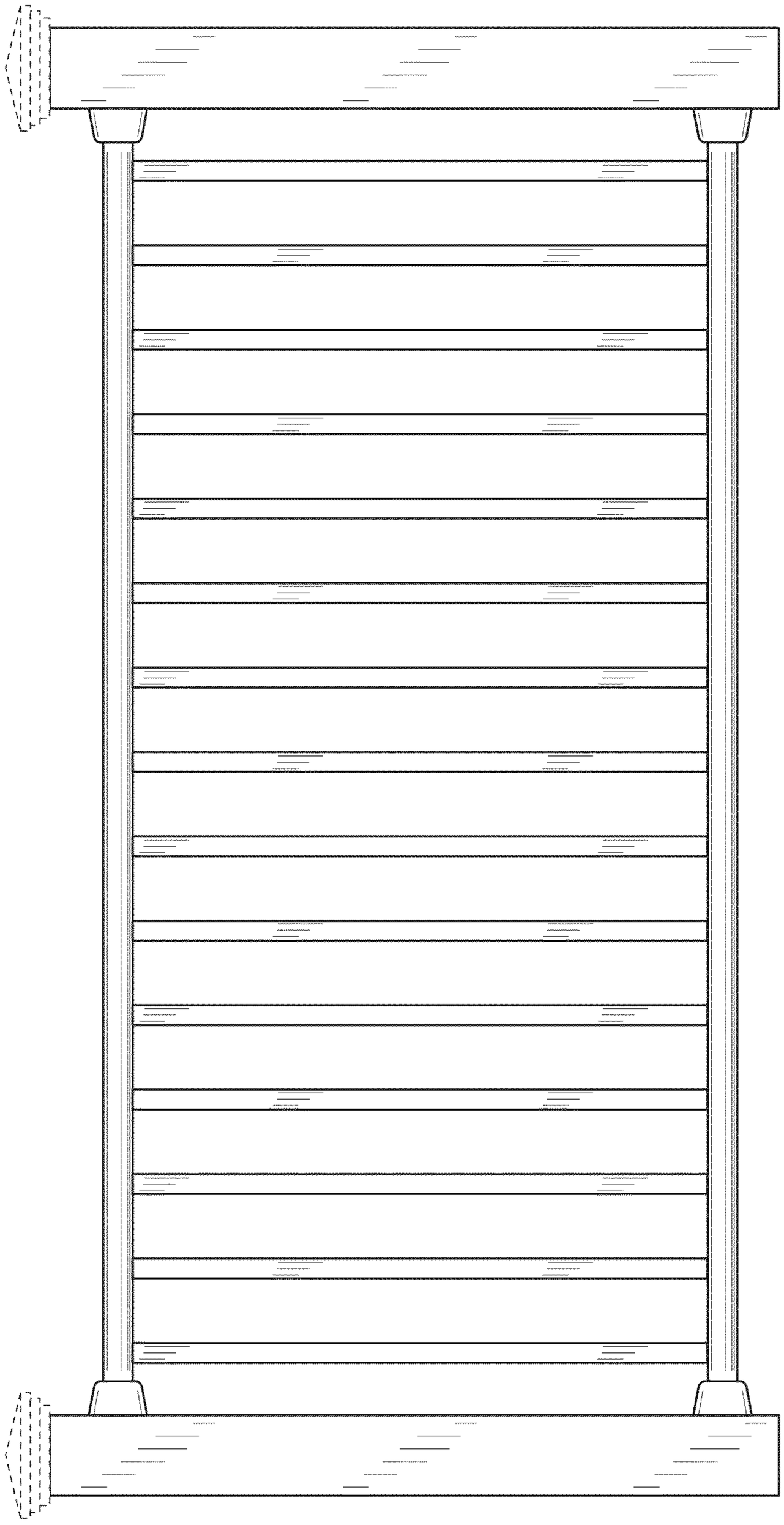

FIG. 3

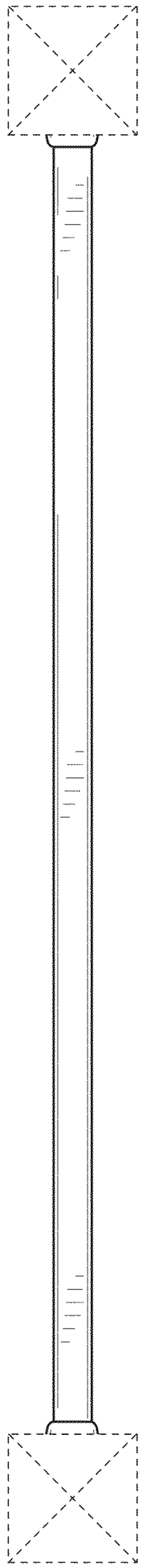

FIG. 4