US00D739525S

(12) United States Design Patent

Hanuka et al.

(10) Patent No.: US D739,525 S
(45) Date of Patent: ** Sep. 22, 2015

(54) **COLOSTOMY APPLIANCE**

(71) Applicant: **B. Braun Medical SAS**, Boulogne-Billancourt (FR)

(72) Inventors: **David Hanuka**, Ramat-Yishai (IL); **Meir Or**, Kfar Eshchar-Doar-Na-Misgav (IL); **Hadas Ziso**, Kiryat-Tivon (IL)

(73) Assignee: **B. Braun Medical SAS**, Boulogne-Billancourt (FR)

(**) Term: **14 Years**

(21) Appl. No.: **29/438,226**

(22) Filed: **Nov. 28, 2012**

(30) **Foreign Application Priority Data**

May 30, 2012 (IL) 52741

(51) **LOC (10) Cl.** **24-02**

(52) **U.S. Cl.**
USPC **D24/129**

(58) **Field of Classification Search**
USPC D24/118, 127, 108, 128, 111; 604/317, 604/327, 408, 403, 108, 339, 92, 415, 410, 604/332, 333; 128/DIG. 24; 383/22, 23, 35; D9/707, 709, 696; 206/219; D18/56
CPC A61F 5/448; A61F 5/445; A61F 5/4401; A61F 5/4407; A61F 5/442
See application file for complete search history.

(56) **References Cited**

U.S. PATENT DOCUMENTS

4,411,659	A	*	10/1983	Jensen et al.	604/332
4,610,676	A	*	9/1986	Schneider et al.	604/339
4,917,691	A		4/1990	Briggs	
4,973,323	A	*	11/1990	Kaczmarek et al.	604/339
D323,213	S	*	1/1992	Iacone	D24/129
5,125,917	A		6/1992	Whealin	
5,167,651	A	*	12/1992	Leise et al.	604/339
5,185,008	A		2/1993	Lavender	
5,312,382	A		5/1994	Metz	
5,330,455	A	*	7/1994	McKay	604/339
5,346,482	A		9/1994	Metz et al.	
5,356,399	A		10/1994	Takahashi	
5,738,661	A		4/1998	Larice	
6,409,710	B1	*	6/2002	Holtermann	604/342
D516,212	S	*	2/2006	Persson et al.	D24/128
D533,660	S		12/2006	Persson et al.	
8,100,875	B2	*	1/2012	Cline et al.	604/328
8,142,406	B2	*	3/2012	Blum	604/338
2013/0079737	A1	*	3/2013	Hanuka et al.	604/318
2013/0116642	A1	*	5/2013	Hanuka et al.	604/333
2013/0304008	A1	*	11/2013	Hanuka et al.	604/334
2014/0309604	A1		10/2014	Paratore	

OTHER PUBLICATIONS

Official Action Dated Nov. 4, 2014 Re. U.S. Appl. No. 29/438,228.

* cited by examiner

Primary Examiner — Eric Goodman
Assistant Examiner — Nathan Johnston
(74) *Attorney, Agent, or Firm* — Kristina Bieker-Brady; Clark & Elbing LLP

(57) **CLAIM**

The ornamental design for a colostomy appliance, as shown.

DESCRIPTION

FIG. **1** is a bottom view of a colostomy appliance showing our new design;
FIG. **2** is a right side view thereof;
FIG. **3** is a front view thereof;
FIG. **4** is a left side view thereof;
FIG. **5** is a rear view thereof;
FIG. **6** is a top view thereof; and,
FIG. **7** is a perspective view thereof.
The features shown in broken lines depict environmental subject matter only and form no part of the claimed design.

1 Claim, 2 Drawing Sheets

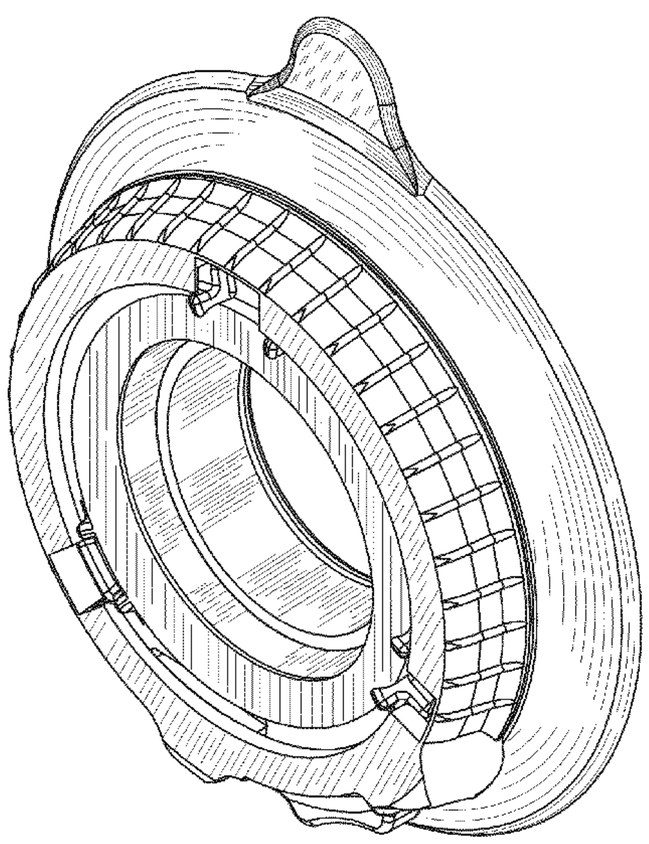

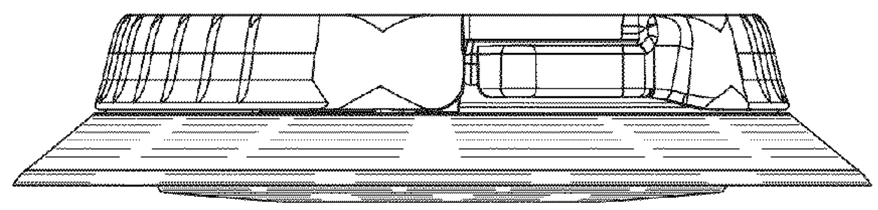

FIG. 1

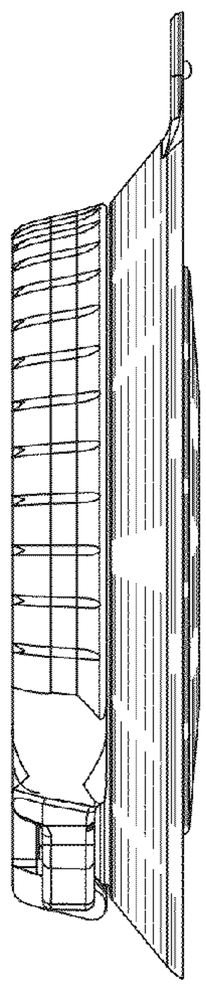

FIG. 2

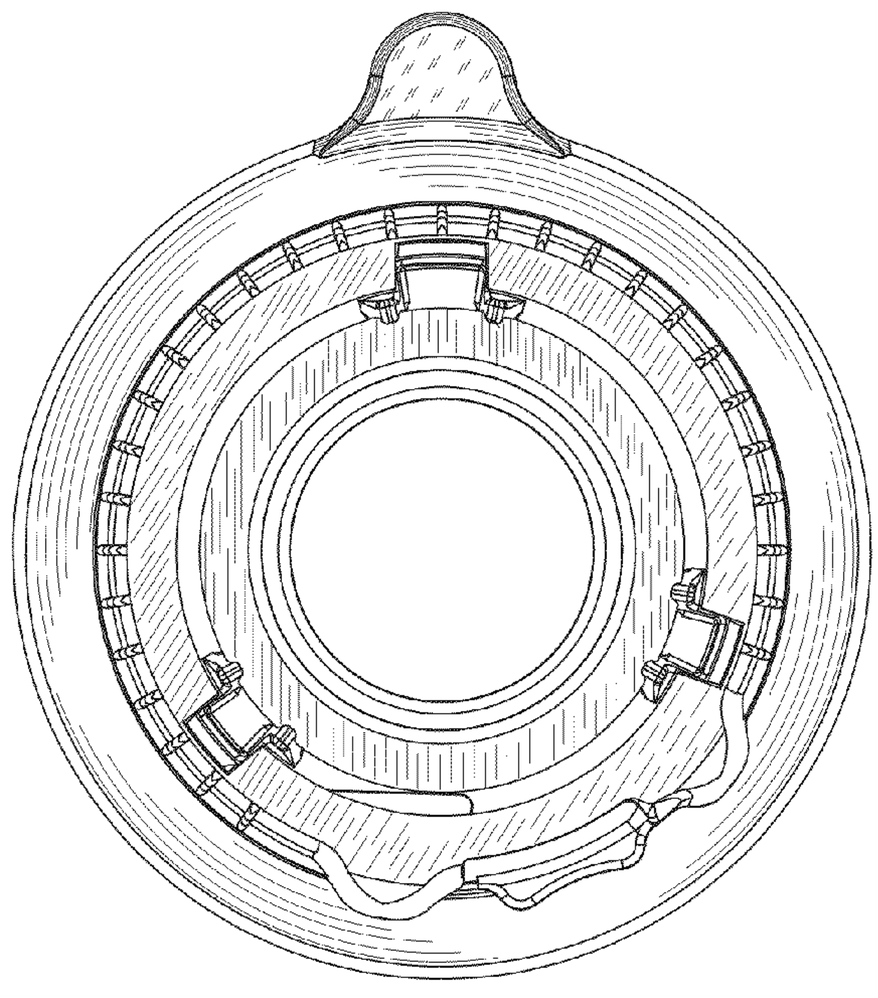

FIG. 3

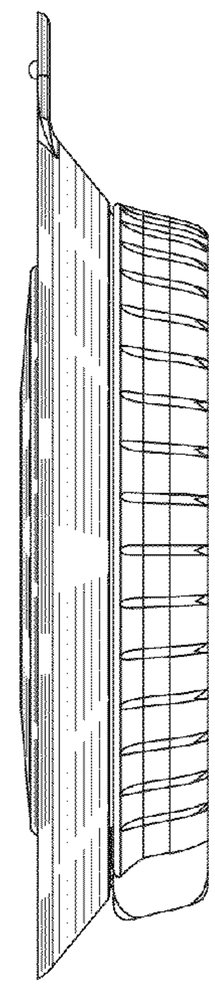

FIG. 4

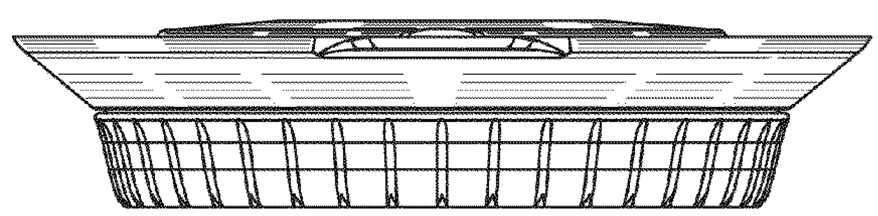

FIG. 6

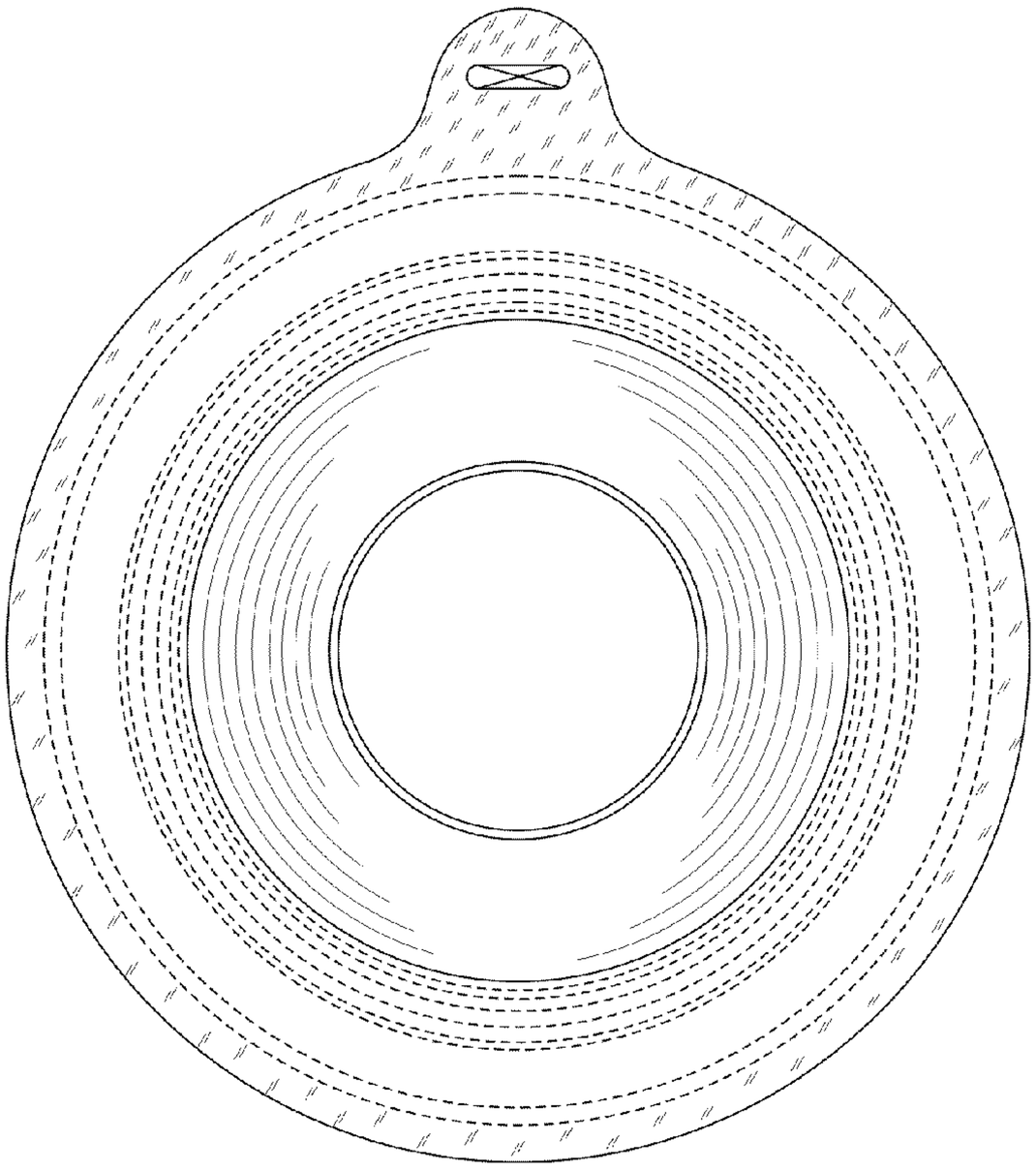

FIG. 5

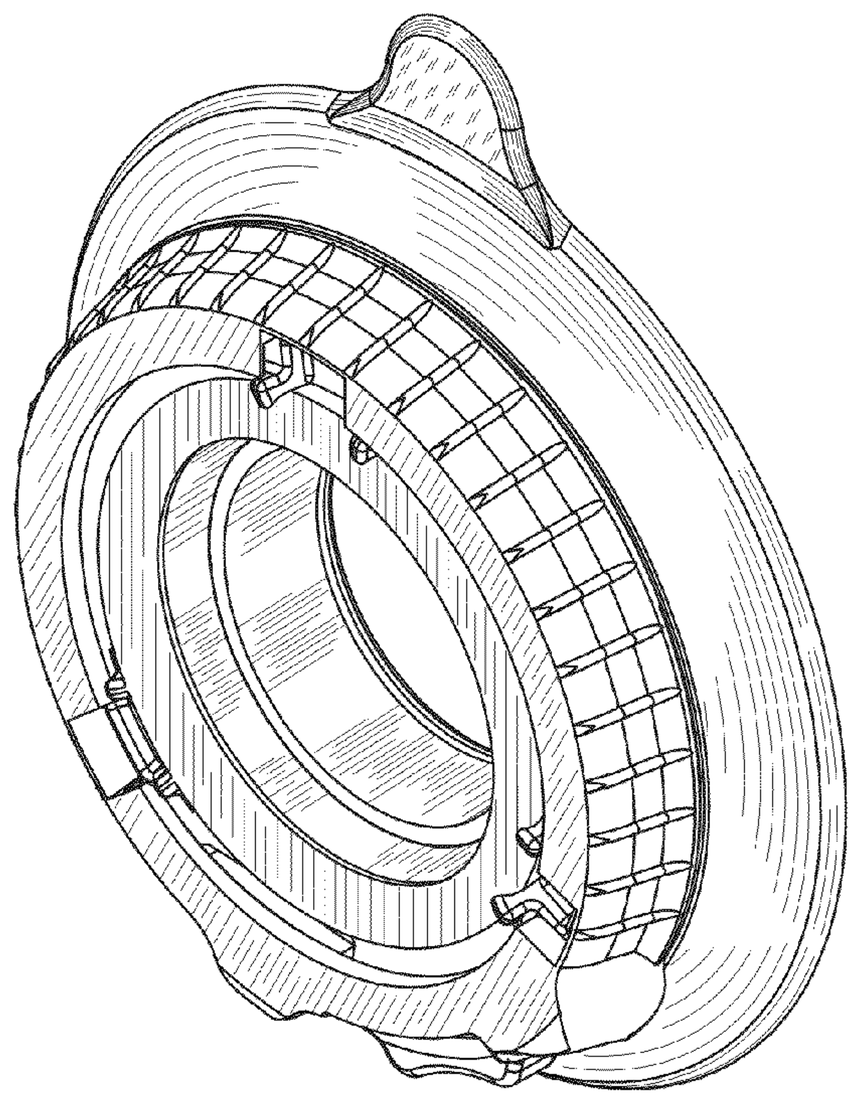

FIG. 7