US00D737939S

(12) United States Design Patent

Garrels et al.

(10) Patent No.: US D737,939 S
(45) Date of Patent: ** Sep. 1, 2015

(54) **DUAL FLUSH HANDLE**

(71) Applicant: **Kohler Co.**, Kohler, WI (US)

(72) Inventors: **Clayton C. Garrels**, Sheboygan, WI (US); **Benjamin B. Fullerton, Jr.**, Oconomowoc, WI (US); **Gary N. Clarke**, Sheboygan, WI (US)

(73) Assignee: **KOHLER CO.**, Kohler, WI (US)

(**) Term: **14 Years**

(21) Appl. No.: **29/499,198**

(22) Filed: **Aug. 12, 2014**

Related U.S. Application Data

(62) Division of application No. 29/484,508, filed on Mar. 10, 2014, now Pat. No. Des. 711,514, and a division of

(Continued)

(51) **LOC (10) Cl.** **23-01**

(52) **U.S. Cl.**
USPC **D23/252**

(58) **Field of Classification Search**
USPC D23/238–243, 250, 252; 4/675–678; 137/801; D8/308
See application file for complete search history.

(56) **References Cited**

U.S. PATENT DOCUMENTS

D105,160 S 6/1937 Zinkil
D108,067 S 1/1938 Clemmons

(Continued)

OTHER PUBLICATIONS

U.S. Appl. No. 61/604,355, filed Feb. 28, 2012, Lambert et al.

(Continued)

Primary Examiner — Robert Delehanty
(74) *Attorney, Agent, or Firm* — Foley & Lardner LLP

(57) **CLAIM**

We claim the ornamental design for a dual flush handle, as shown and described.

DESCRIPTION

FIG. **1** is a perspective view of an embodiment of the claimed design;
FIG. **2** is a front view of the design of FIG. **1**;
FIG. **3** is a rear view of the design of FIG. **1**;
FIG. **4** is a left-side view of the design of FIG. **1**;
FIG. **5** is a right-side view of the design of FIG. **1**;
FIG. **6** is a top view of the design of FIG. **1**;
FIG. **7** is a bottom view of the design of FIG. **1**;
FIG. **8** is a perspective view of another embodiment of the claimed design;
FIG. **9** is a front view of the design of FIG. **8**;
FIG. **10** is a rear view of the design of FIG. **8**;
FIG. **11** is a left-side view of the design of FIG. **8**;
FIG. **12** is a right-side view of the design of FIG. **8**;
FIG. **13** is a top view of the design of FIG. **8**;
FIG. **14** is a bottom view of the design of FIG. **8**;
FIG. **15** is a perspective view of another embodiment of the claimed design;
FIG. **16** is a front view of the design of FIG. **15**;
FIG. **17** is a rear view of the design of FIG. **15**;
FIG. **18** is a left-side view of the design of FIG. **15**;
FIG. **19** is a right-side view of the design of FIG. **15**;
FIG. **20** is a top view of the design of FIG. **15**;
FIG. **21** is a bottom view of the design of FIG. **15**;
FIG. **22** is a perspective view of another embodiment of the claimed design;
FIG. **23** is a front view of the design of FIG. **22**;
FIG. **24** is a rear view of the design of FIG. **22**;
FIG. **25** is a left-side view of the design of FIG. **22**;
FIG. **26** is a right-side view of the design of FIG. **22**;
FIG. **27** is a top view of the design of FIG. **22**; and,
FIG. **28** is a bottom view of the design of FIG. **22**.

The ornamental design which is claimed is shown in solid lines in the drawings. The broken lines in the drawings are for illustrative purposes only and form no part of the claimed design. The dash-dot lines in the drawings define boundaries of the claimed design and form no part thereof.

1 Claim, 12 Drawing Sheets

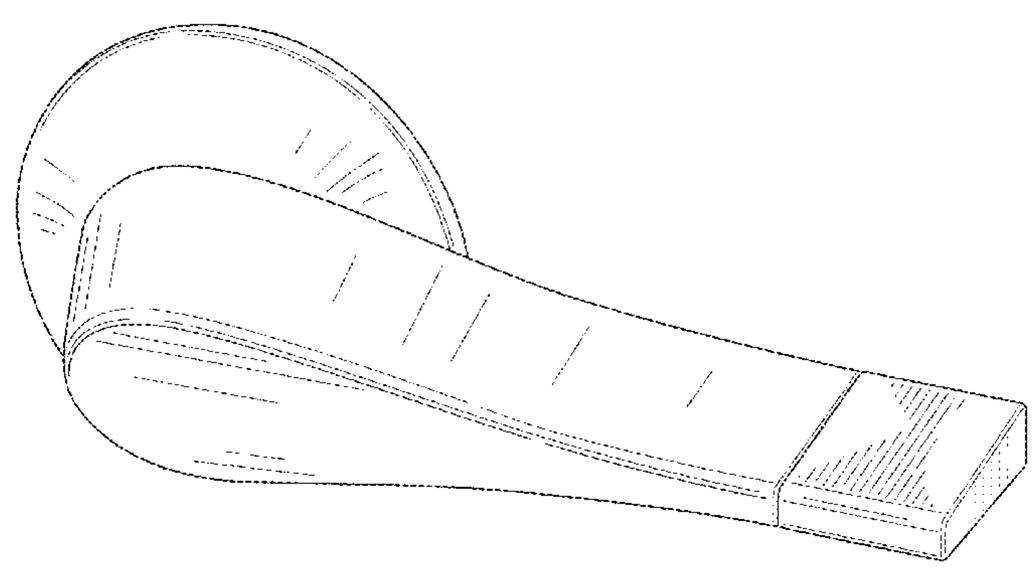

Related U.S. Application Data

application No. 29/484,499, filed on Mar. 10, 2014, now Pat. No. Des. 711,513, said application No. 29/484,508 is a division of application No. 29/433,633, filed on Oct. 2, 2012, now Pat. No. Des. 703,295, said application No. 29/484,499 is a division of application No. 29/433,633, filed on Oct. 2, 2012, now Pat. No. Des. 703,295.

(56) **References Cited**

U.S. PATENT DOCUMENTS

D263,990	S	4/1982	Fleischmann
D265,117	S	6/1982	Fleischmann
4,411,029	A	10/1983	Huang
D284,500	S	7/1986	Bolgert
D289,543	S	4/1987	Davis
D294,731	S	3/1988	Reid
D296,578	S	7/1988	Reid
D297,356	S	8/1988	Reid
D299,739	S	2/1989	Kohler, Jr.
D302,849	S	8/1989	Kohler, Jr.
D316,747	S	5/1991	Fleischmann
D318,905	S	8/1991	Reid
D323,022	S	1/1992	Ragonot
D324,412	S	3/1992	Bonnell
D326,139	S	5/1992	Ragonot
D338,518	S	8/1993	Reid
D339,190	S	9/1993	Pieramico
D346,105	S	4/1994	Shaanan
D349,328	S	8/1994	Bollenbacher
D356,145	S	3/1995	Bollenbacher
D367,519	S	2/1996	Bengtson
D379,847	S	6/1997	Kohler, Jr.
D407,144	S	3/1999	Formgren
D476,065	S	6/2003	Smith
D495,401	S	8/2004	Smith
D495,780	S	9/2004	Aubry
D521,607	S	5/2006	Blomstrom
D523,937	S	6/2006	Schaffeld et al.
D530,399	S	10/2006	Blomstrom
D532,486	S	11/2006	Barry
D545,402	S	6/2007	Kohler, Jr.
D579,523	S	10/2008	Montgomery
D592,281	S	5/2009	Eilmus
D605,258	S	12/2009	Rubin
D627,442	S	11/2010	Sedwick
D644,303	S	8/2011	Slothower
D644,304	S	8/2011	Slothower
D661,783	S	6/2012	Georgeson et al.

OTHER PUBLICATIONS

First Office Action in related Russian Design Application No. 2013502747.

First Office Action in related Russian Design Application No. 2013502748.

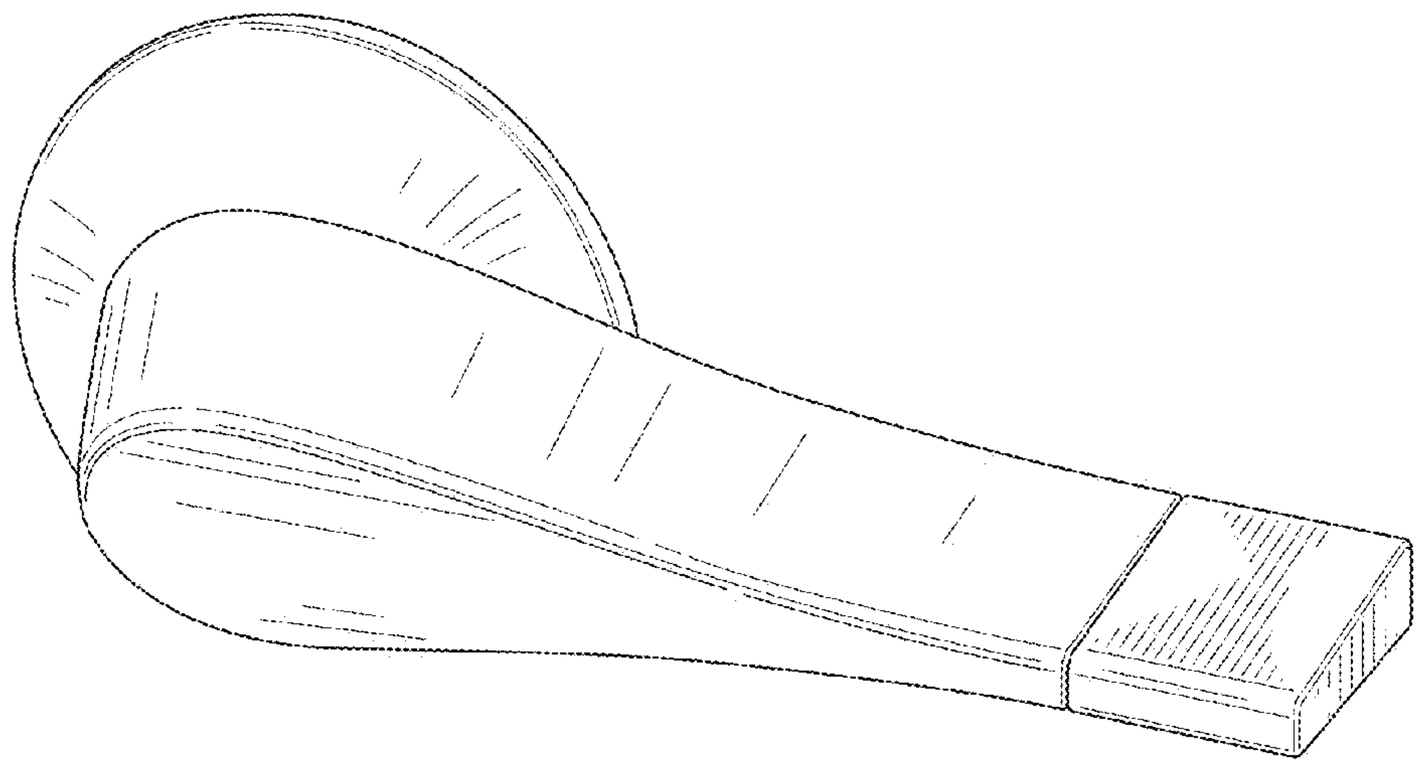

FIG. 1

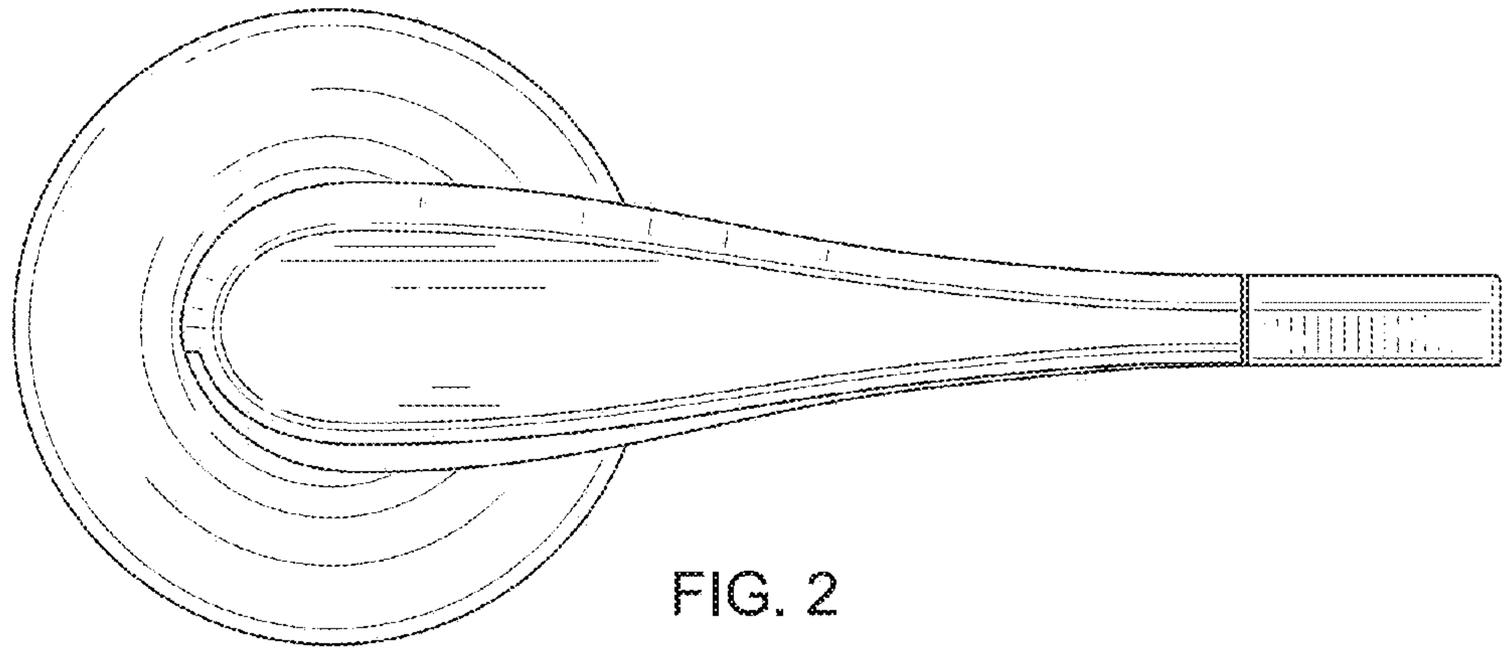

FIG. 2

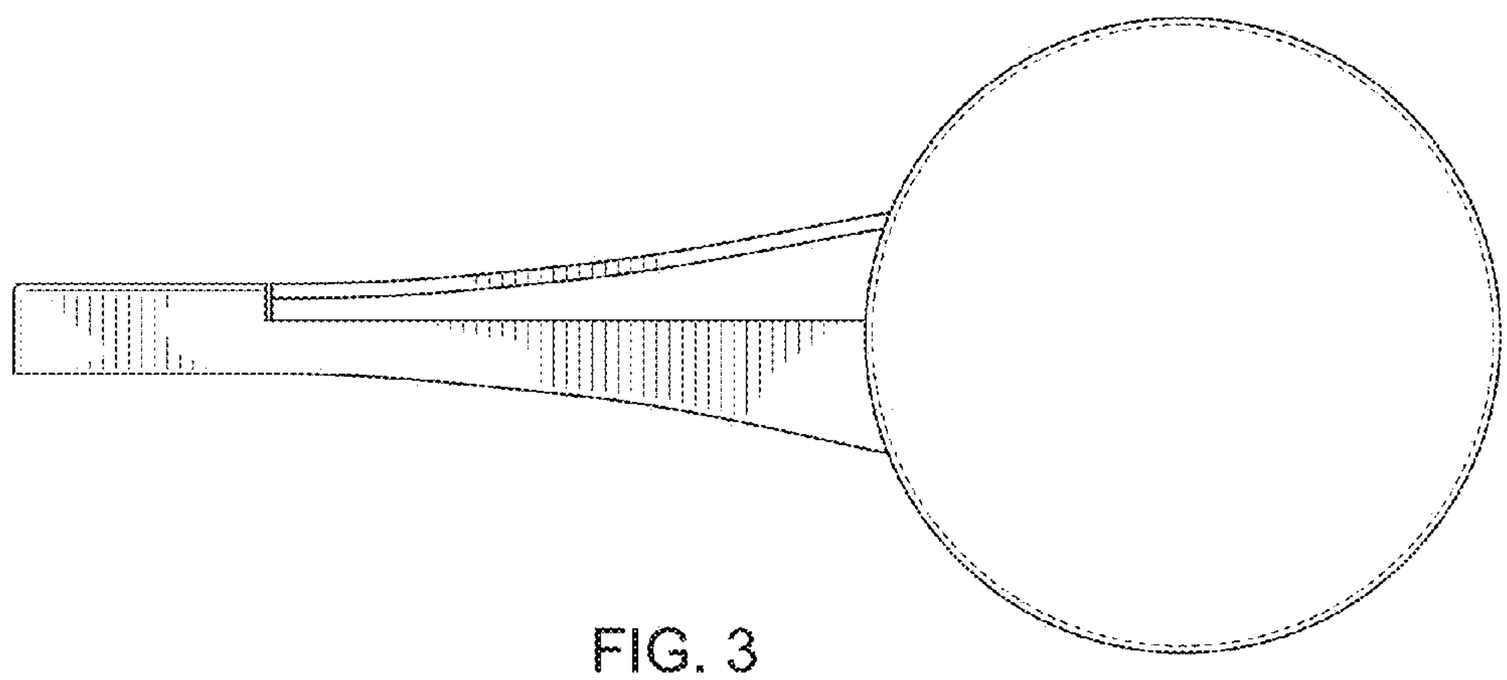

FIG. 3

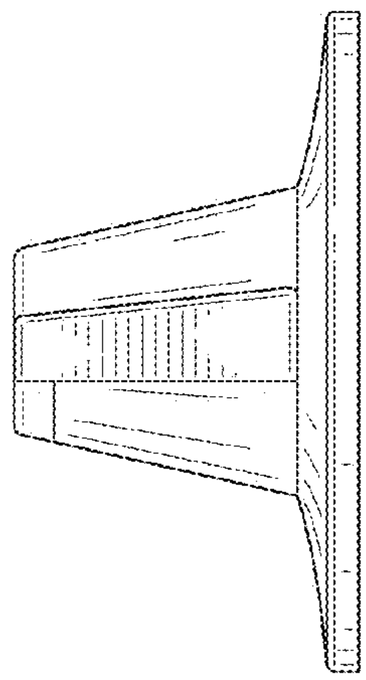

FIG. 4

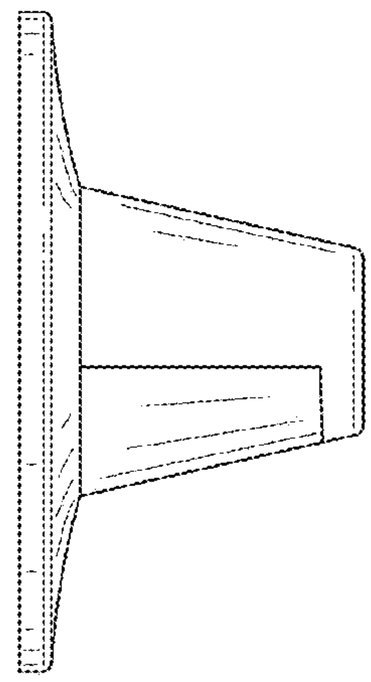

FIG. 5

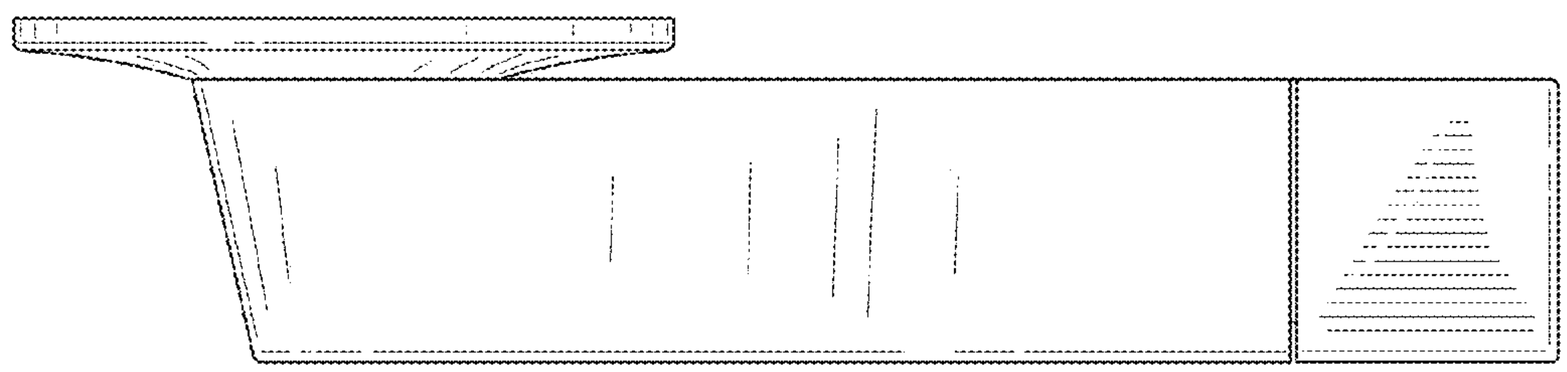

FIG. 6

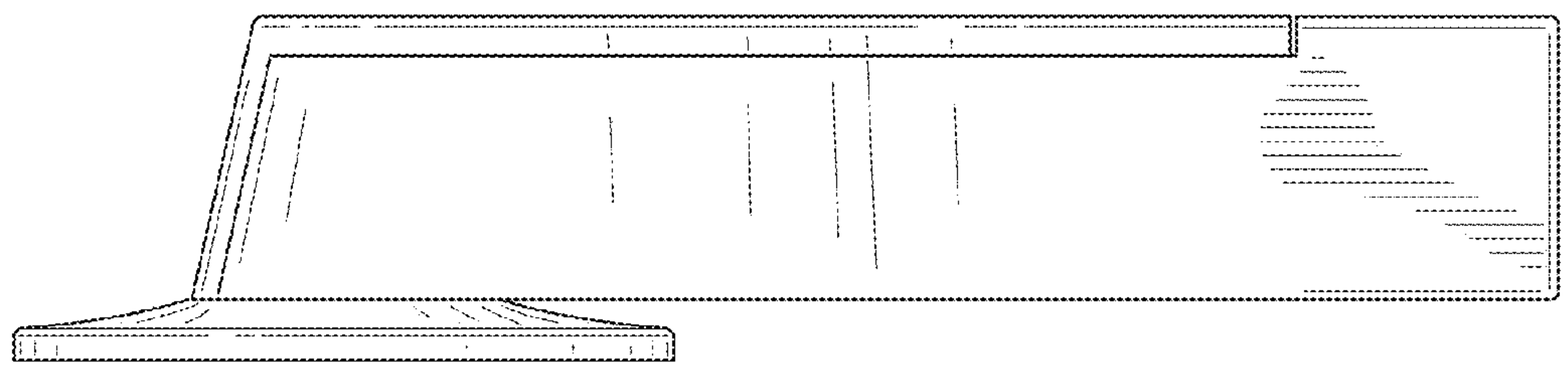

FIG. 7

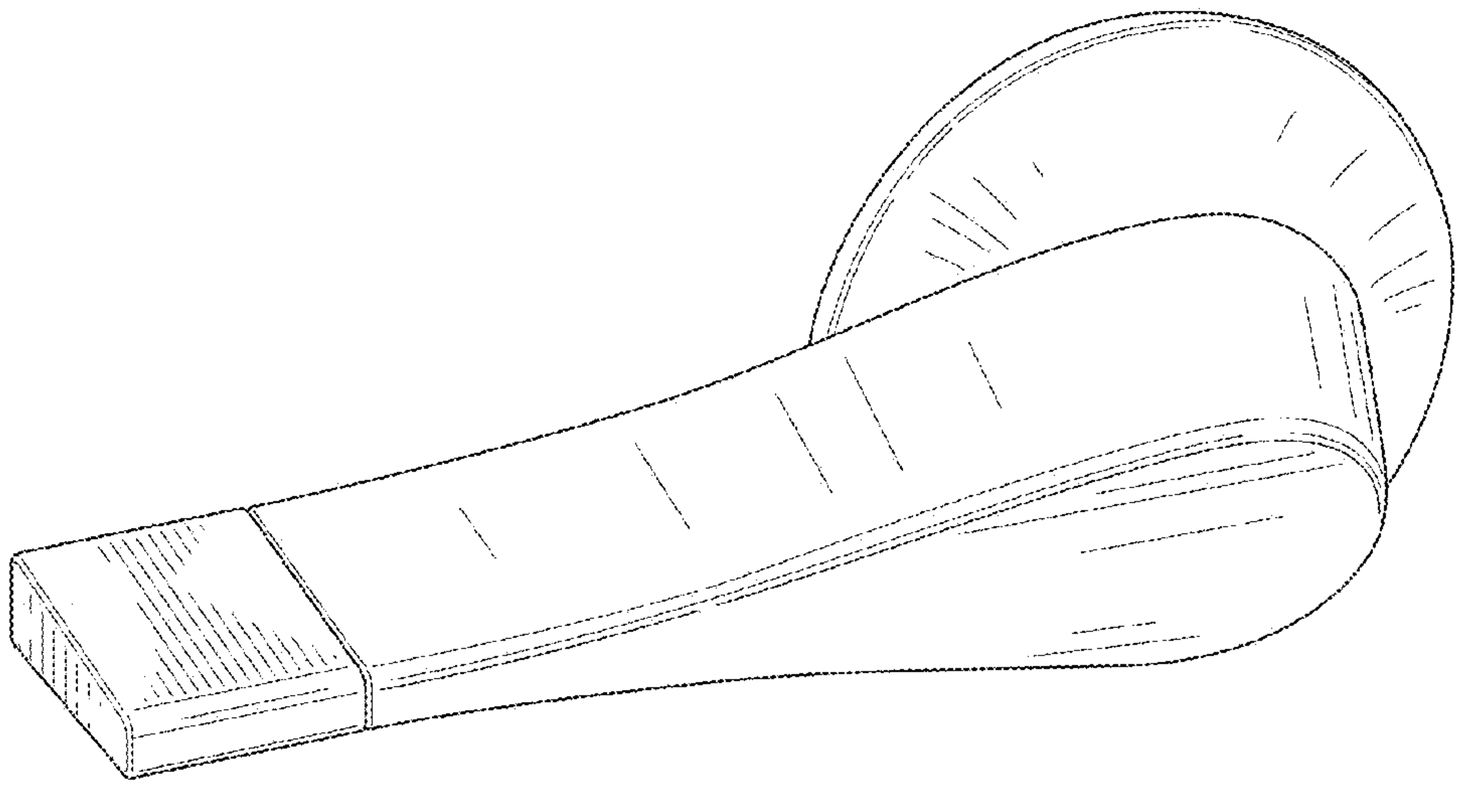

FIG. 8

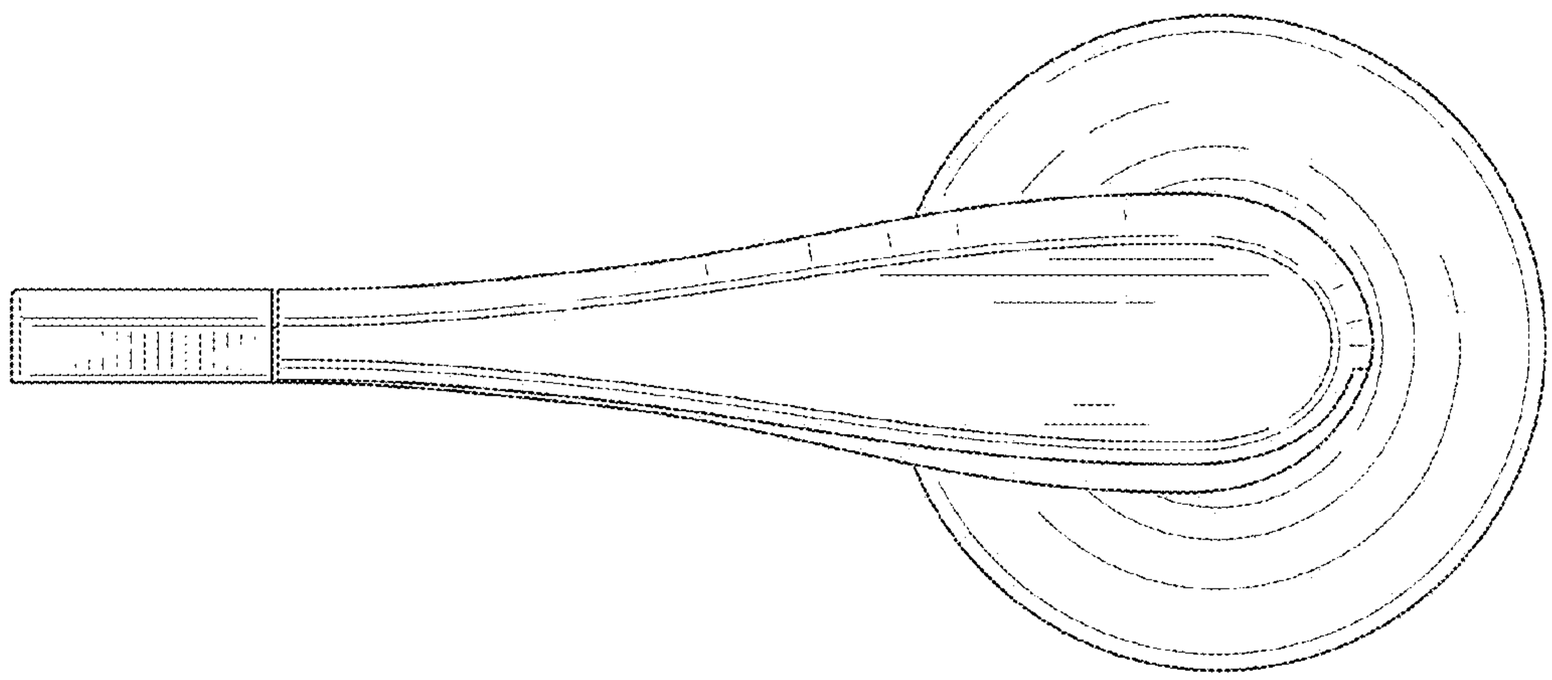

FIG. 9

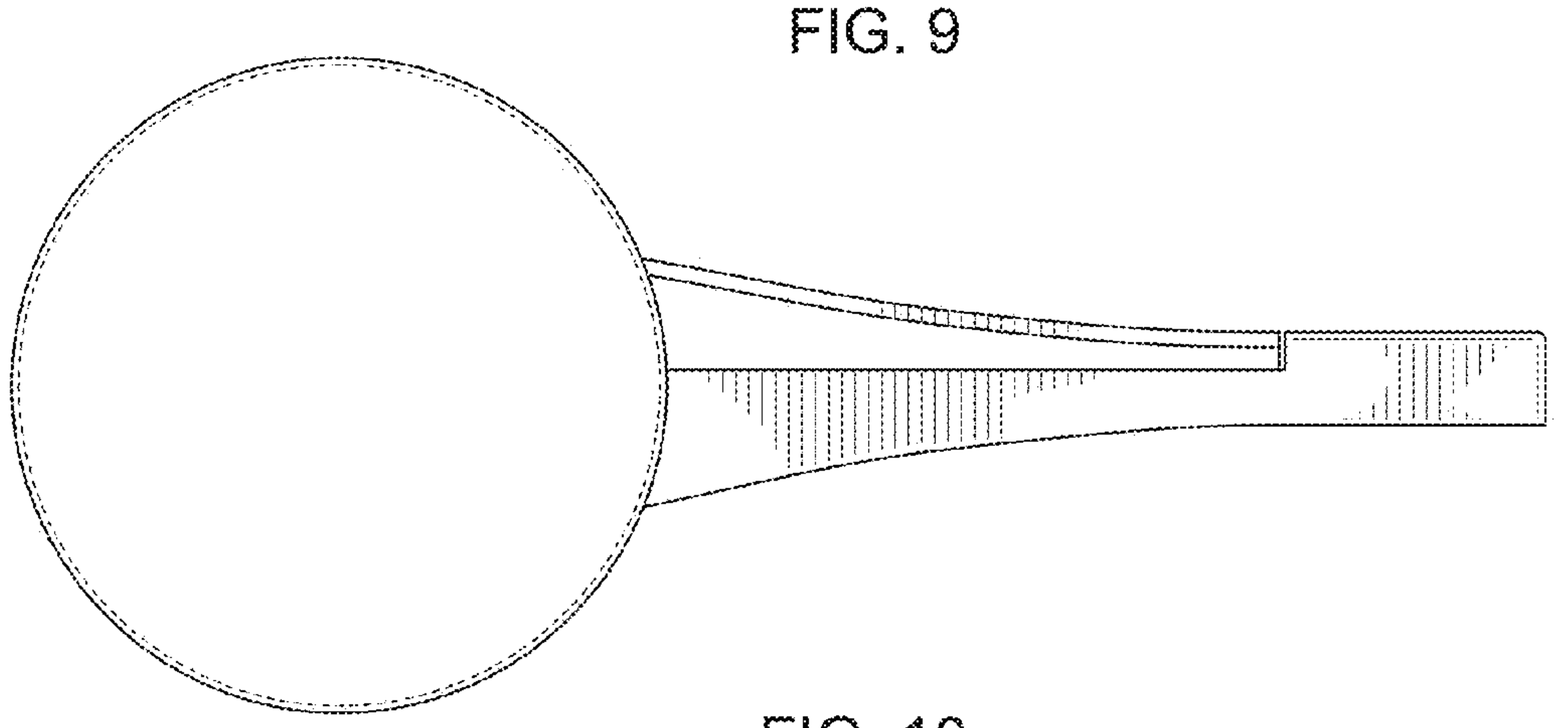

FIG. 10

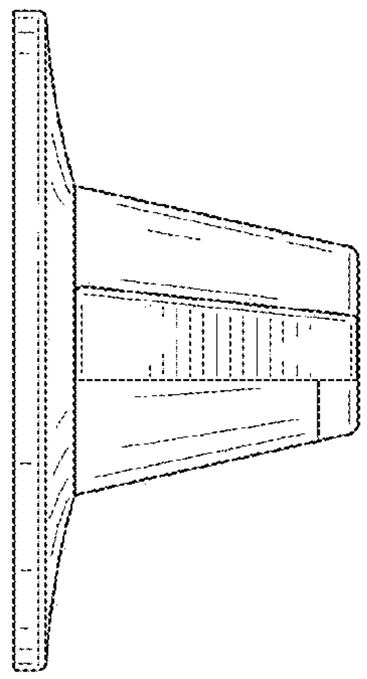

FIG. 11

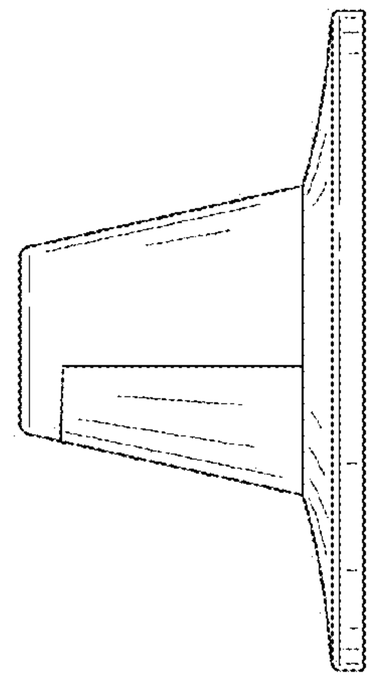

FIG. 12

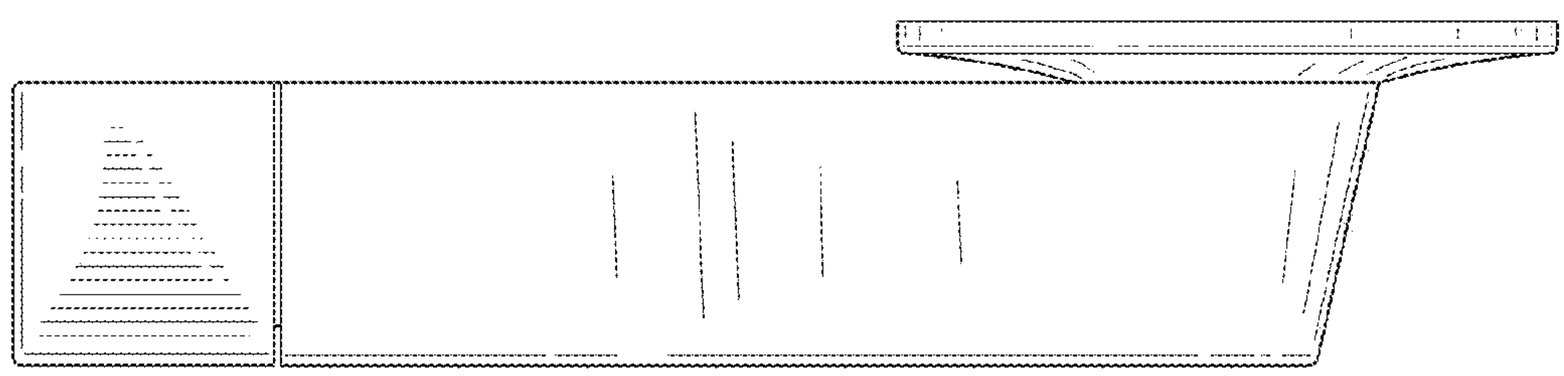

FIG. 13

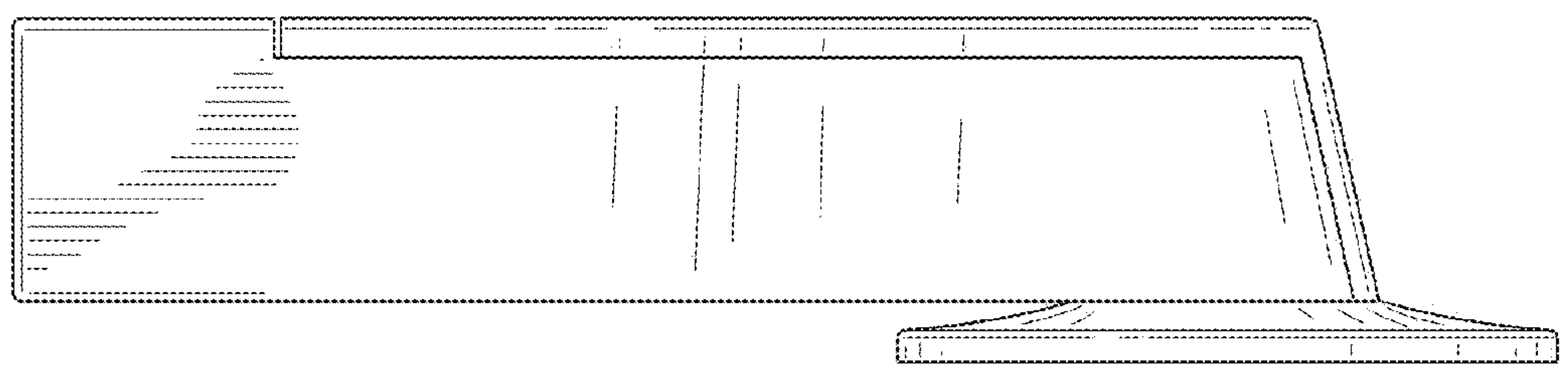

FIG. 14

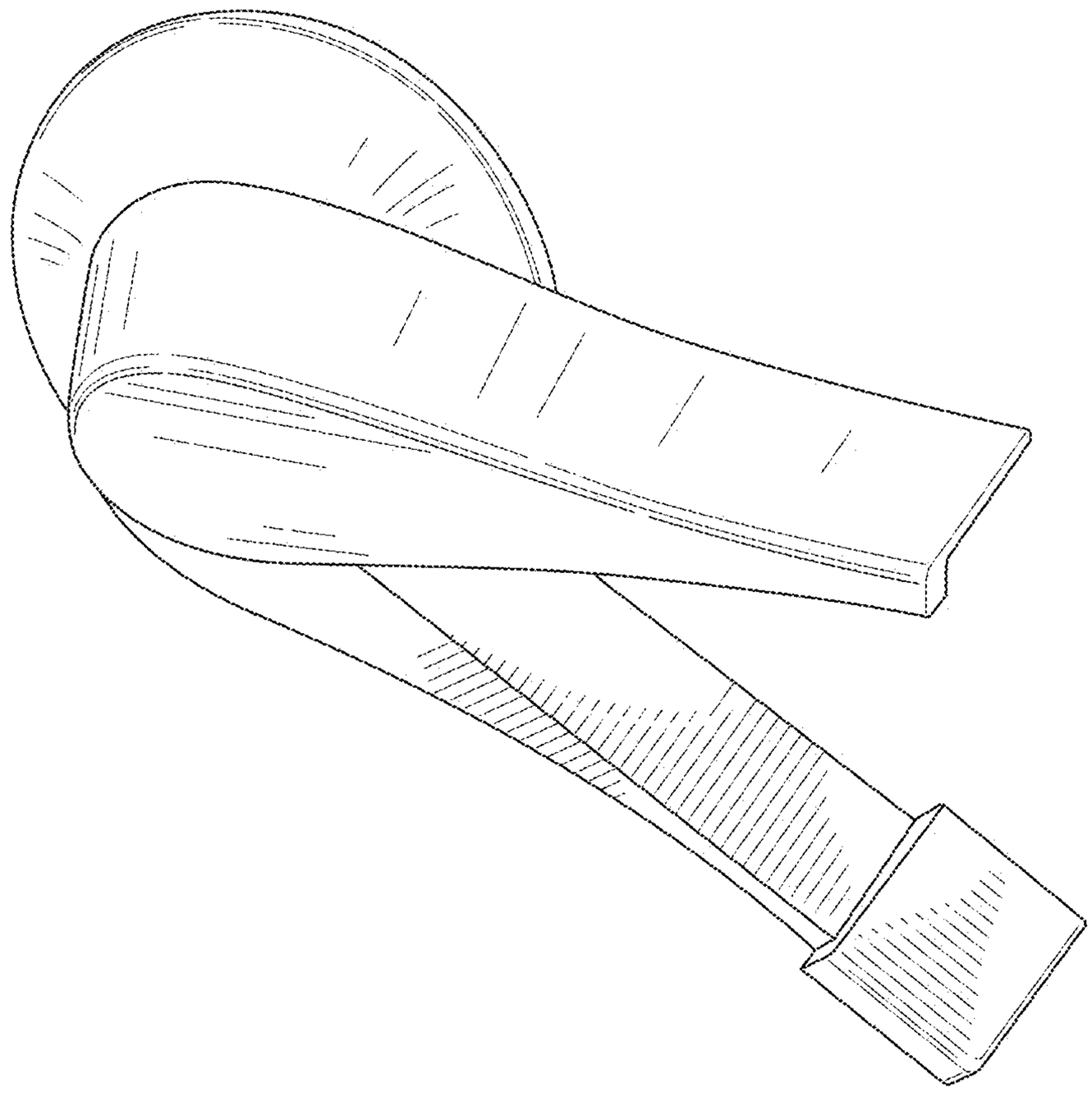

FIG. 15

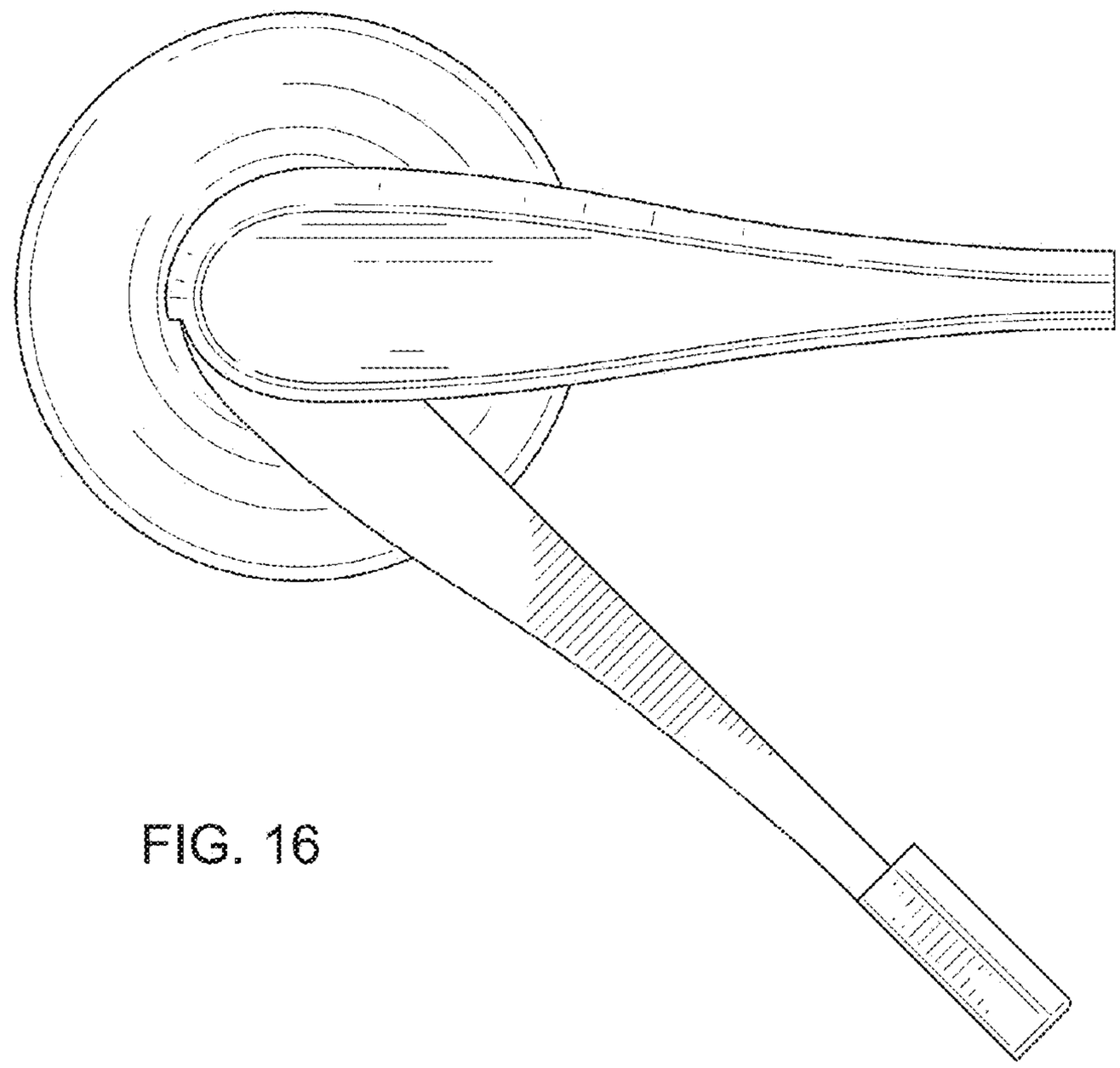

FIG. 16

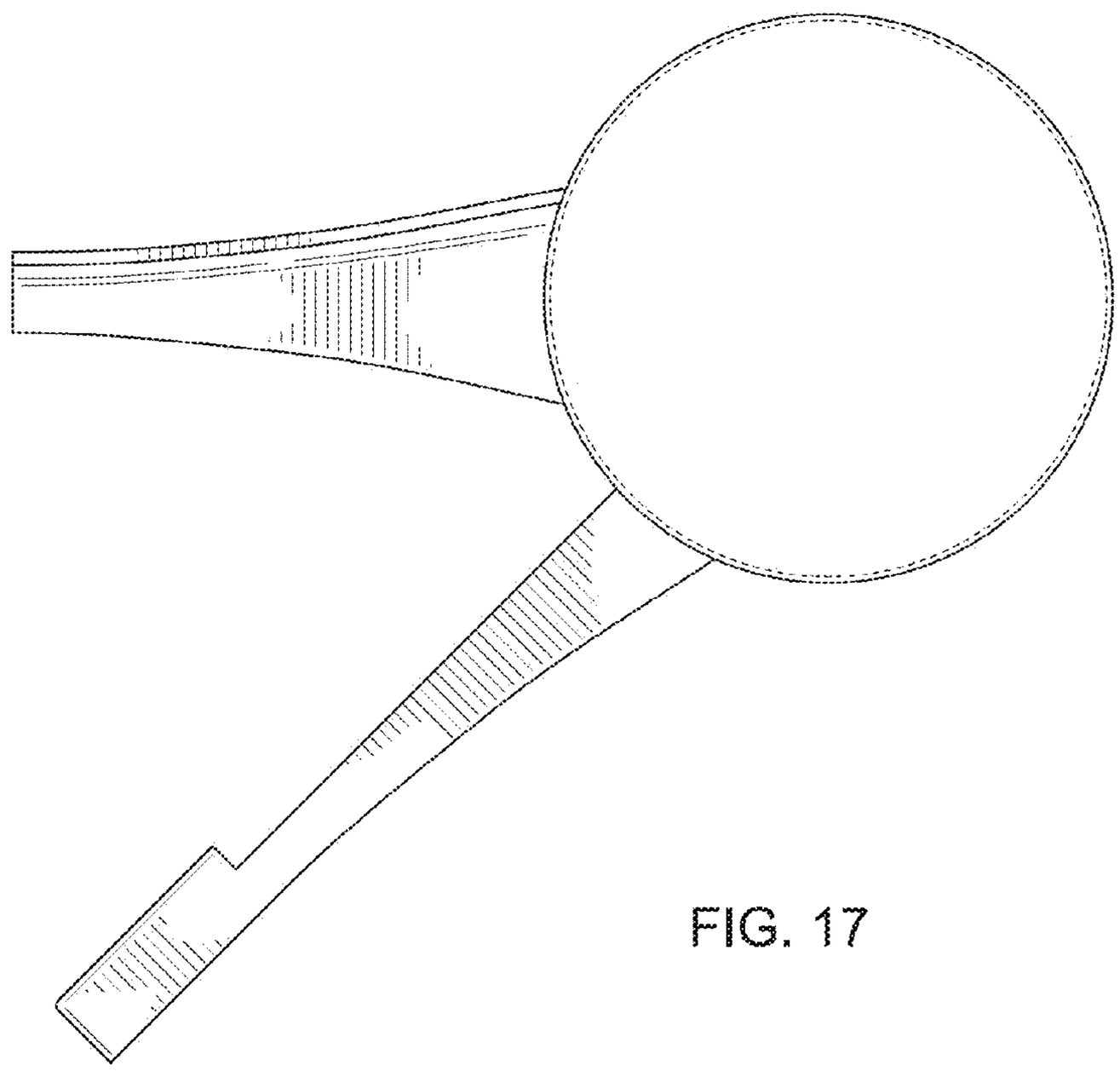

FIG. 17

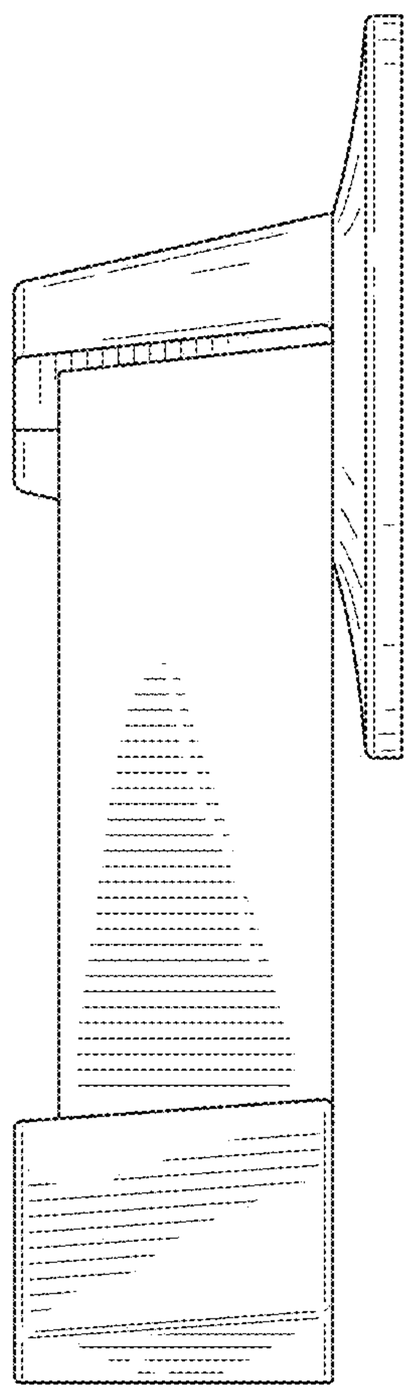

FIG. 18

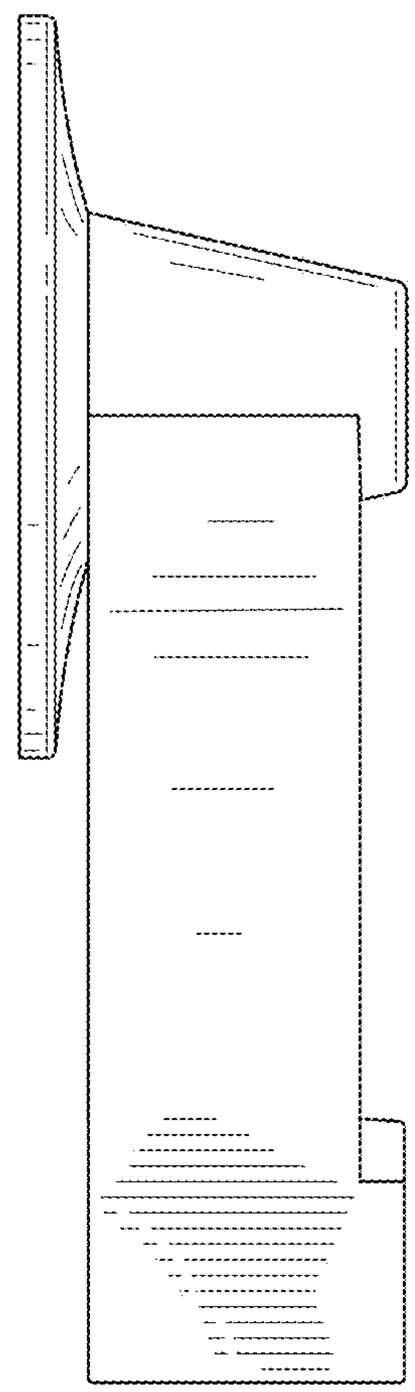

FIG. 19

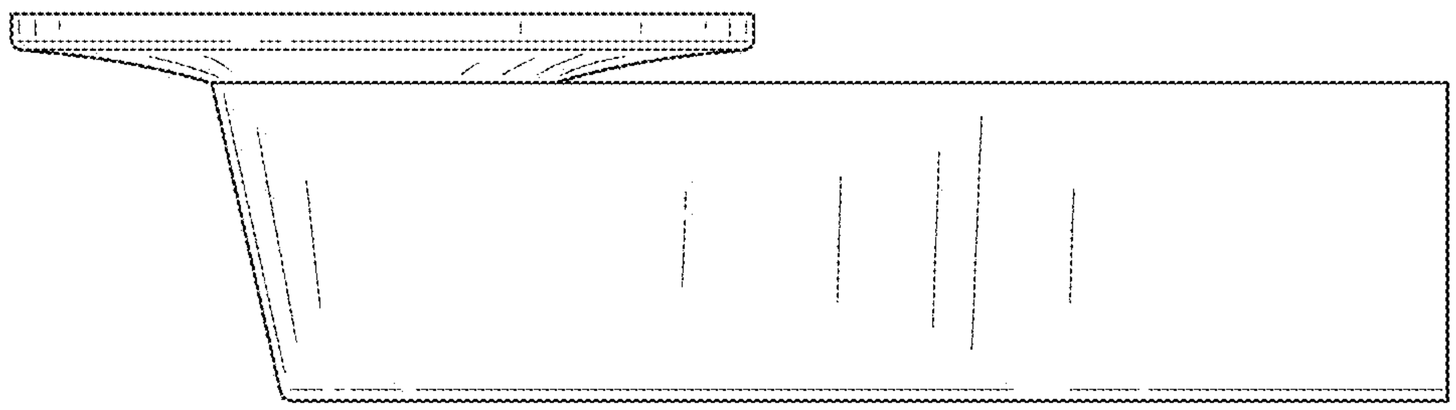

FIG. 20

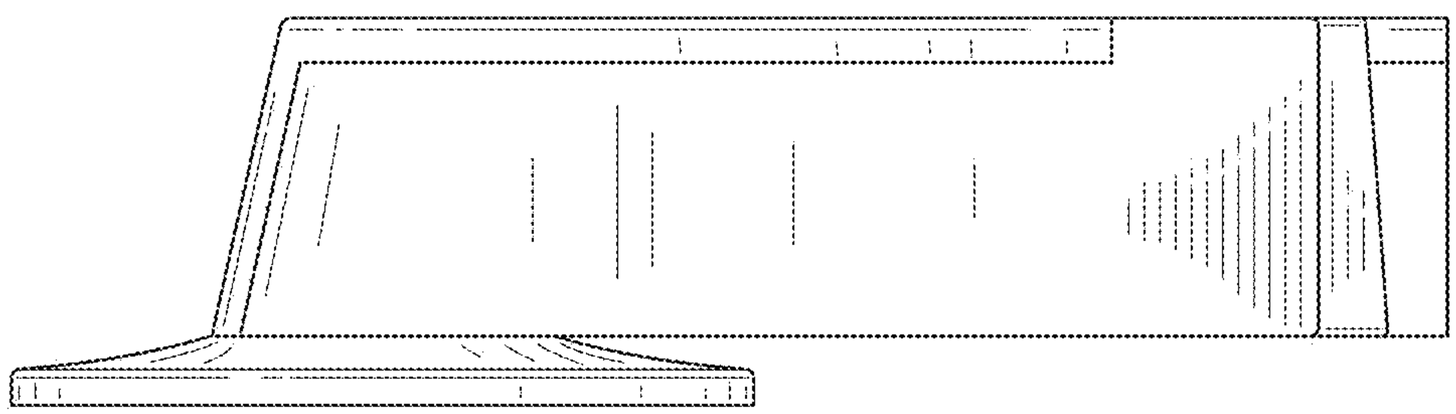

FIG. 21

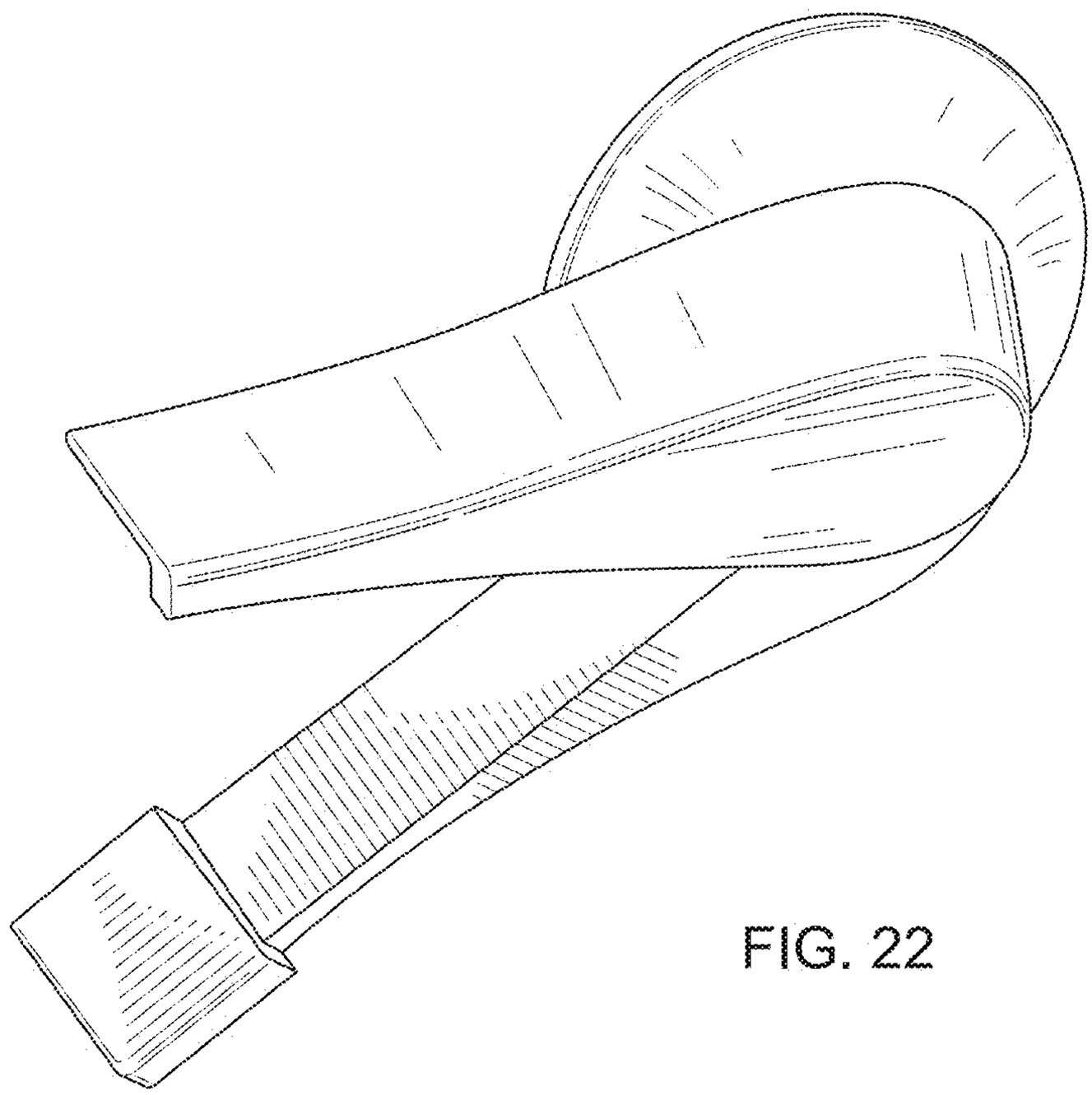

FIG. 22

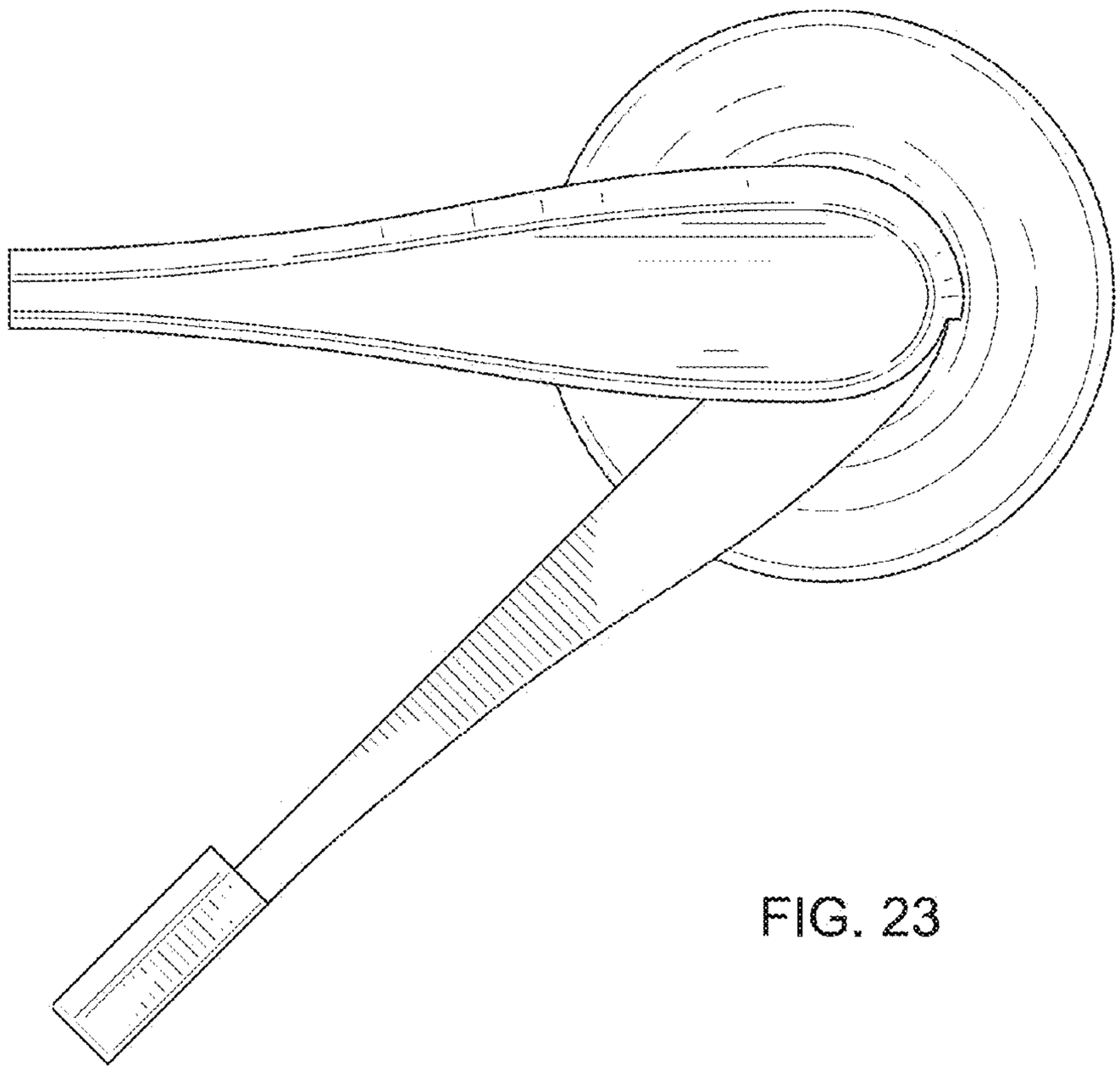

FIG. 23

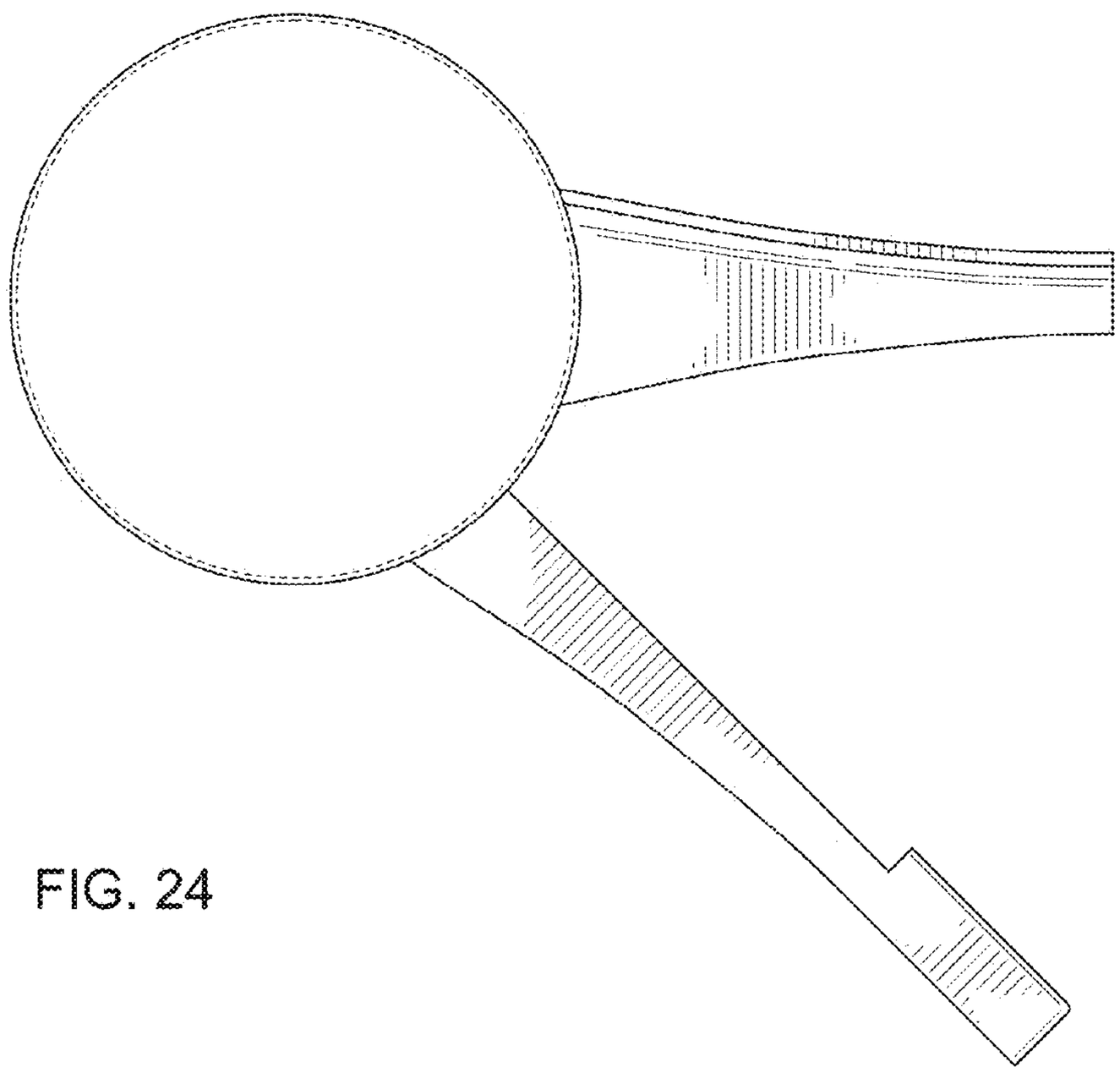

FIG. 24

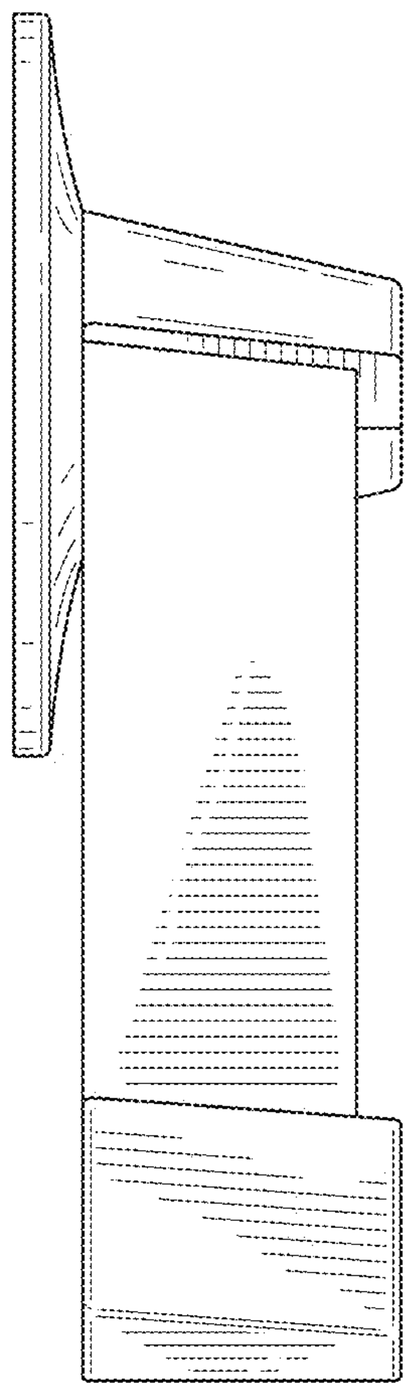

FIG. 25

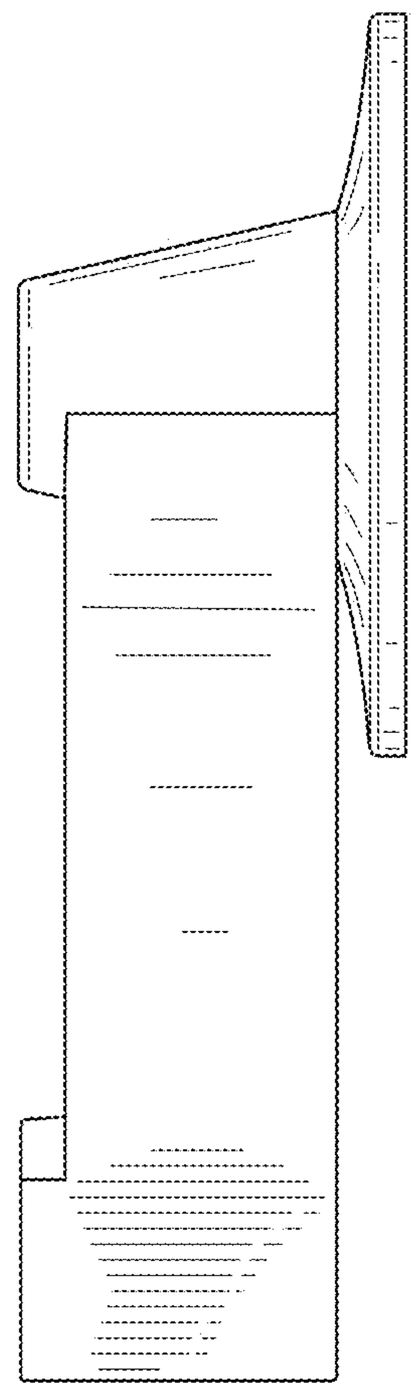

FIG. 26

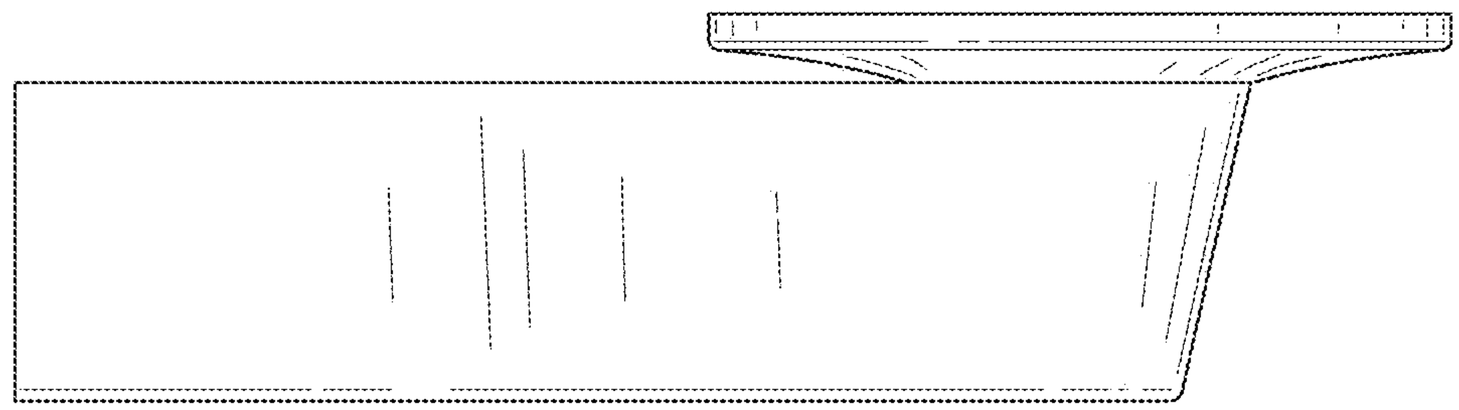

FIG. 27

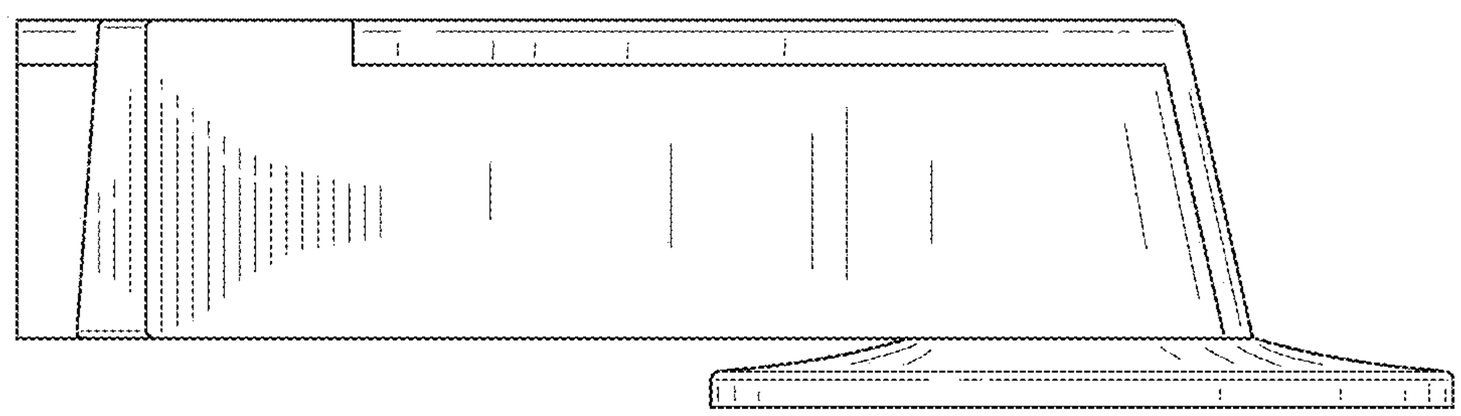

FIG. 28