US00D735311S

(12) United States Design Patent
Horiguchi

(10) Patent No.: US D735,311 S
(45) Date of Patent: ** Jul. 28, 2015

(54) **EXHAUST CLEANER FOR FLUID PRESSURE DEVICE**

(71) Applicant: **Hiroyuki Horiguchi**, Tsukubamirai (JP)

(72) Inventor: **Hiroyuki Horiguchi**, Tsukubamirai (JP)

(73) Assignee: **SMC Corporation**, Chiyoda-ku, Tokyo (JP)

(**) Term: **14 Years**

(21) Appl. No.: **29/478,531**

(22) Filed: **Jan. 6, 2014**

(30) **Foreign Application Priority Data**

Aug. 30, 2013 (JP) 2013-020069

(51) **LOC (10) Cl.** **23-04**

(52) **U.S. Cl.**
USPC **D23/365**

(58) **Field of Classification Search**
USPC ..... D23/365, 363, 358, 386, 354, 341, 364, D23/209; 55/385, 502, 497, 498, 506, 505, 55/521, 495, 422, 493, DIG. 30; 210/497.01, DIG. 17; D12/194; D15/5, D15/9; 138/37–39, 114; 181/227, 223; D9/549, 558, 559, 560; D22/108
CPC Y02T 10/47; Y02T 10/24; Y02T 10/20; F01N 13/009; C02F 9/00
See application file for complete search history.

(56) **References Cited**

U.S. PATENT DOCUMENTS

D254,145 S * 2/1980 Wilcock D23/209
D352,544 S * 11/1994 Golan D23/209
D372,069 S * 7/1996 Brancazio et al. D23/209
D417,252 S * 11/1999 Kay D22/108
D448,448 S * 9/2001 Hughes et al. D23/209
D458,570 S * 6/2002 Wang D12/194
D468,640 S * 1/2003 Mitchell et al. D9/503
D478,146 S * 8/2003 Wygant D22/108
D488,484 S * 4/2004 Fletcher D15/5
D492,386 S * 6/2004 Kamata et al. D23/209
D528,564 S * 9/2006 Tomiji D15/5
D536,416 S * 2/2007 Zabinski et al. D23/209
D587,361 S * 2/2009 Sakairi D23/365
D589,601 S * 3/2009 Horiguchi D23/365
D589,602 S * 3/2009 Horiguchi D23/365
D638,088 S * 5/2011 Hawthorne et al. D22/108
D643,442 S * 8/2011 Sato et al. D15/9
D682,974 S * 5/2013 Honigmann D22/108
D683,810 S * 6/2013 Buie, II D22/108
D712,007 S * 8/2014 Reid D23/209
D712,507 S * 9/2014 Hammerback D23/209
D720,031 S * 12/2014 Buffoni D22/108

(Continued)

Primary Examiner — David Muller
Assistant Examiner — Nathan Johnston
(74) *Attorney, Agent, or Firm* — Yokoi & Co., U.S.A.; Toshiyuki Yokoi

(57) **CLAIM**

The ornamental design for an exhaust cleaner for fluid pressure device, as shown and described.

DESCRIPTION

FIG. **1** shows a front view of an exhaust cleaner for fluid pressure device showing my new design;
FIG. **2** shows a rear view thereof;
FIG. **3** shows a right side view thereof;
FIG. **4** shows a left side view thereof;
FIG. **5** shows a top view thereof;
FIG. **6** shows a bottom view thereof;
FIG. **7** shows a bottom, front and left side perspective view thereof;
FIG. **8** shows a top, front and right side perspective view thereof; and,
FIG. **9** shows an enlarged cross-sectional view thereof, taken along line **9-9** in Fig. **1**.
The portions of the design shown in broken lines in FIGS. **1-9** are for the purpose of illustrating the environment only and form no part of the claimed design.

1 Claim, 5 Drawing Sheets

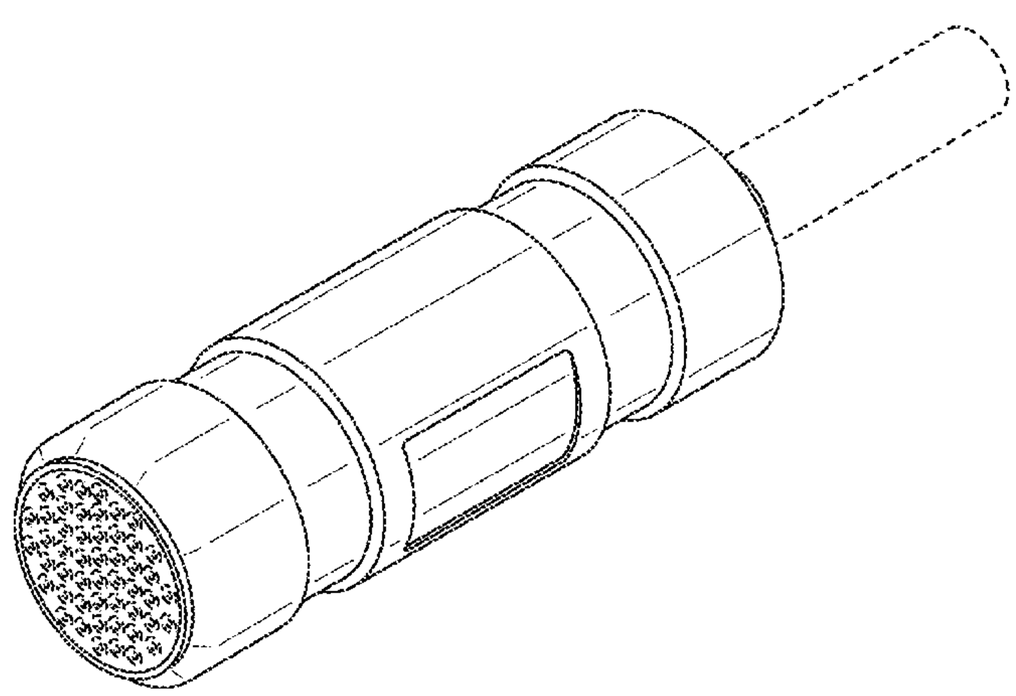

(56) **References Cited**

U.S. PATENT DOCUMENTS

8,974,569 B2 * 3/2015 Matula et al. 55/482
D726,870 S * 4/2015 Ruprecht D23/209
2006/0102534 A1 * 5/2006 Faria 210/130

* cited by examiner

FIG. 1

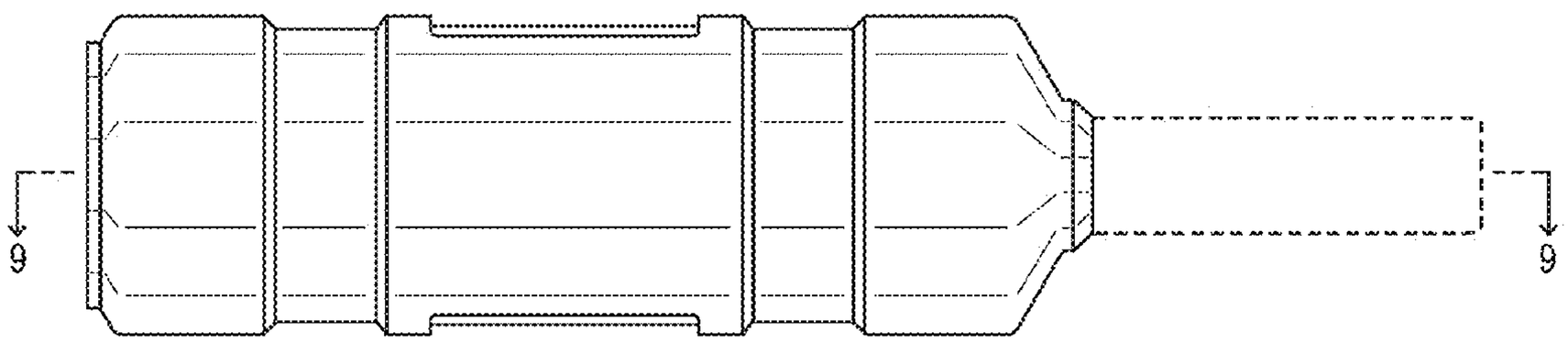

FIG. 2

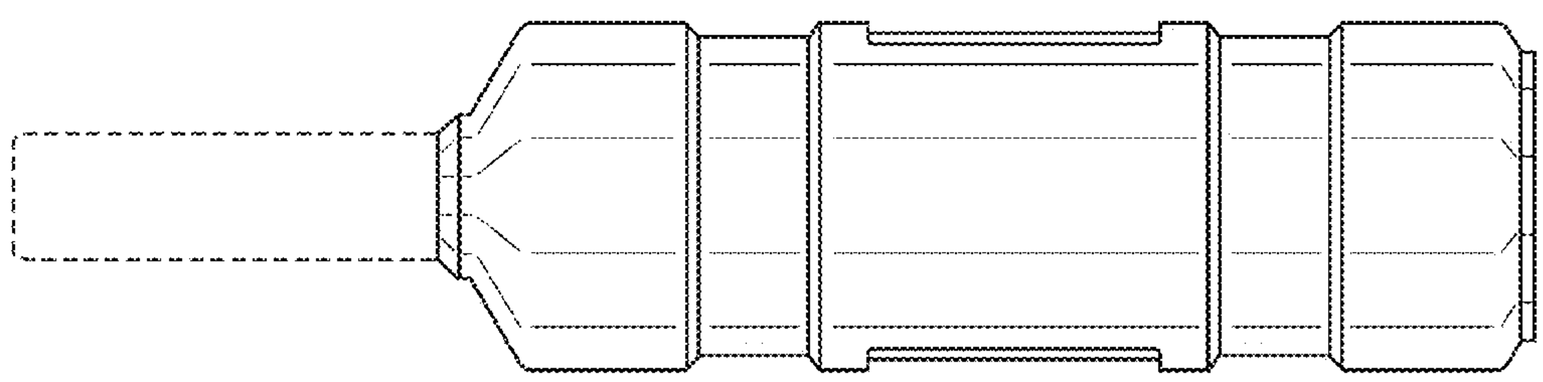

FIG. 3

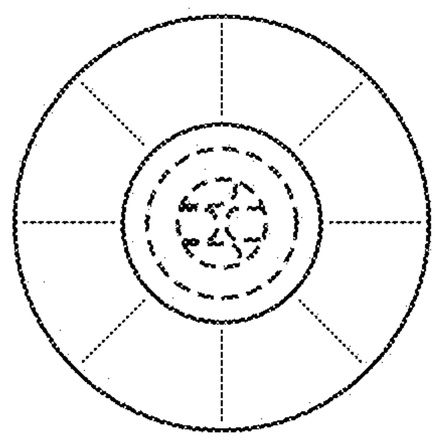

FIG. 4

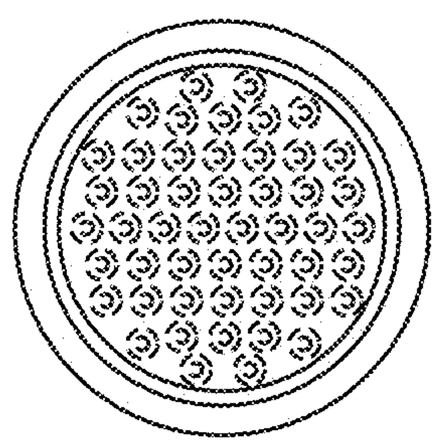

FIG. 5

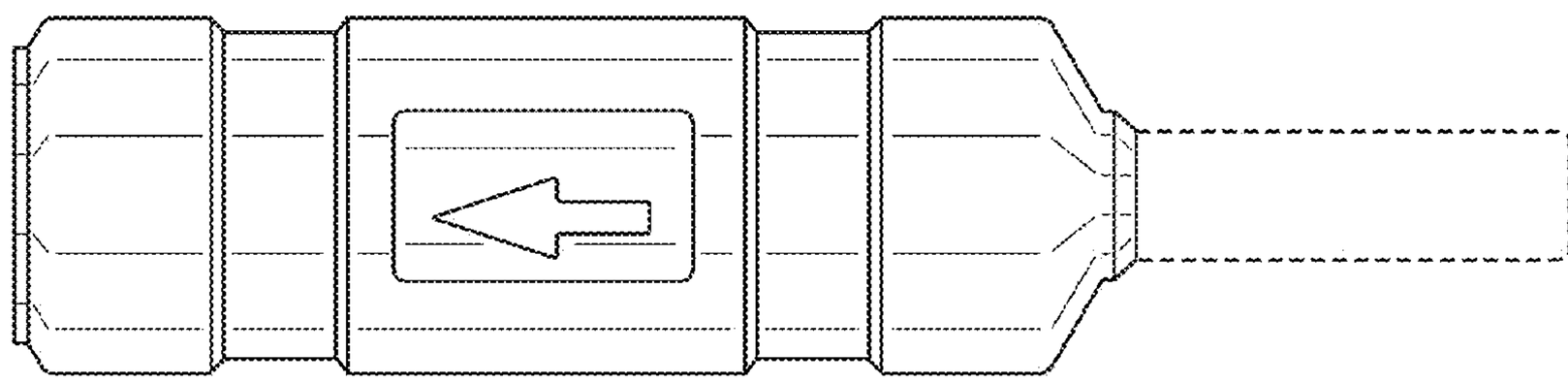

FIG. 6

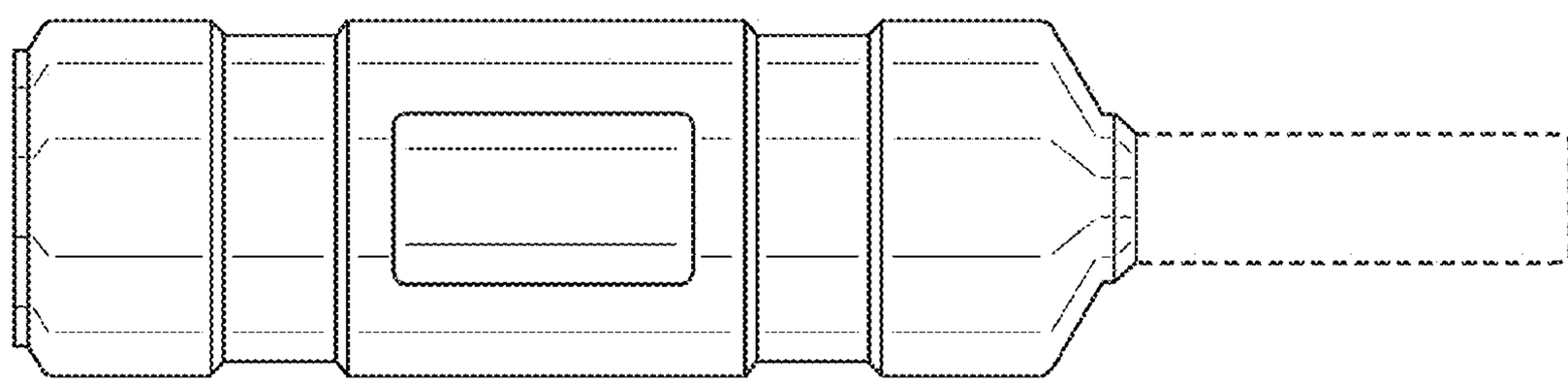

FIG. 7

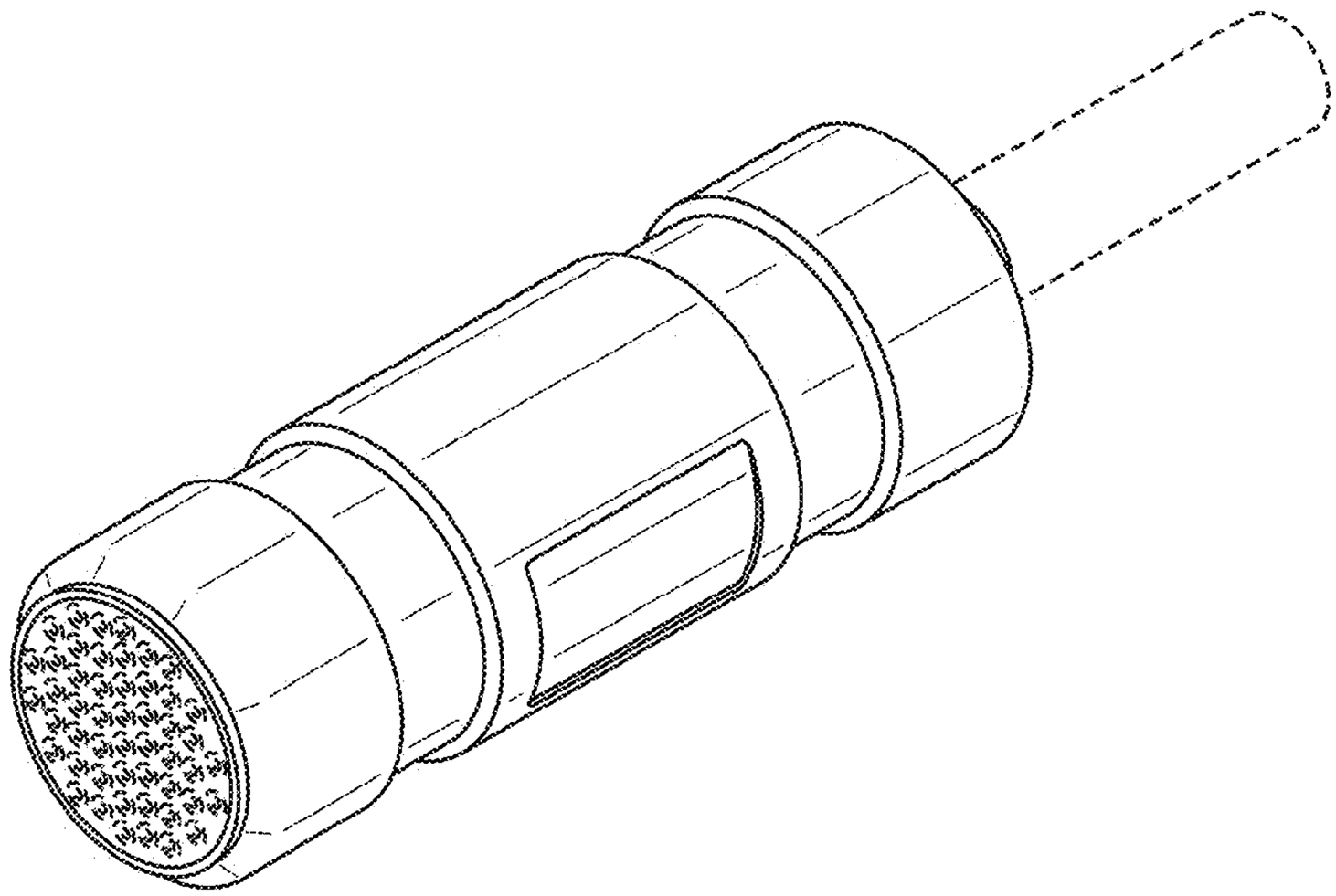

FIG. 8

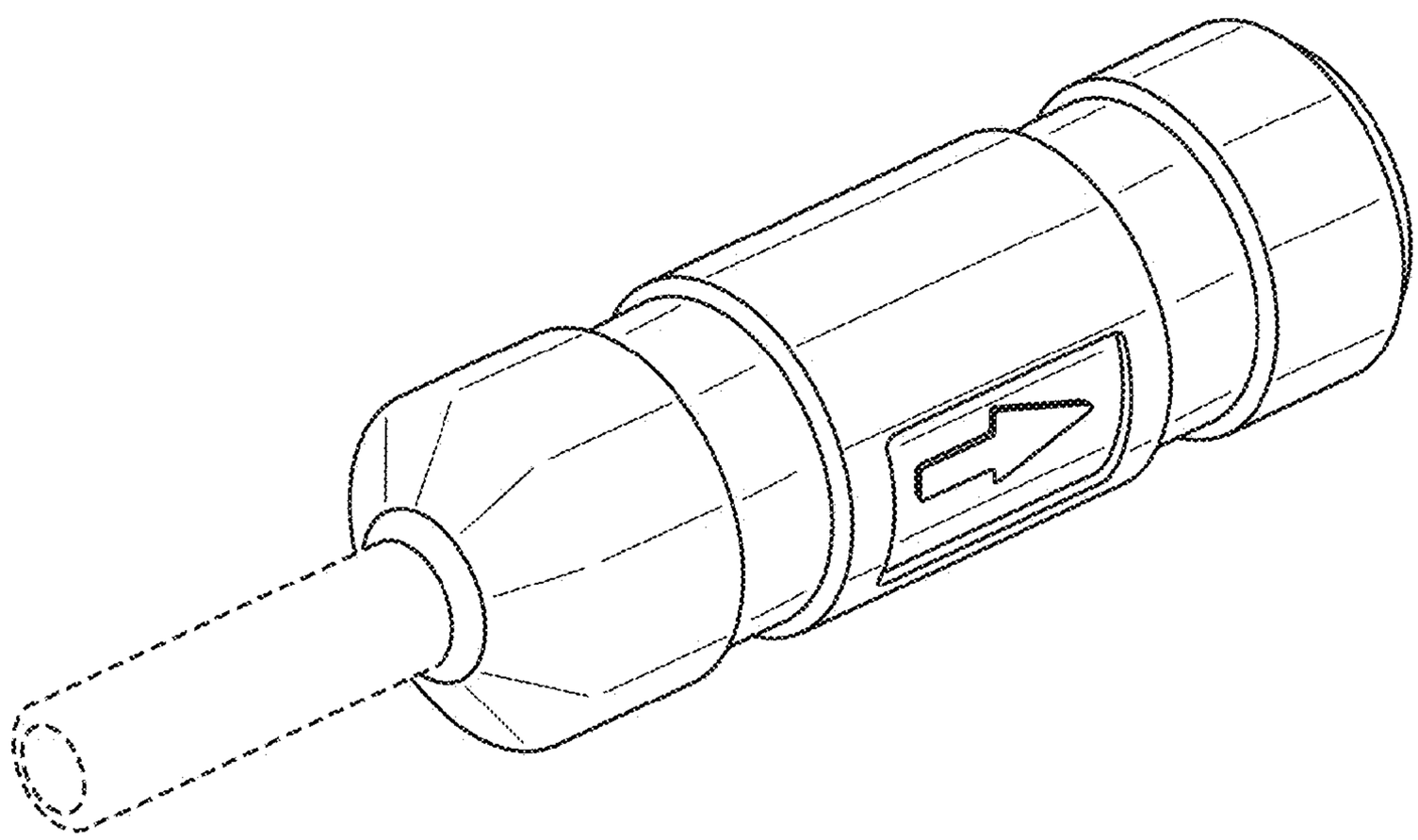
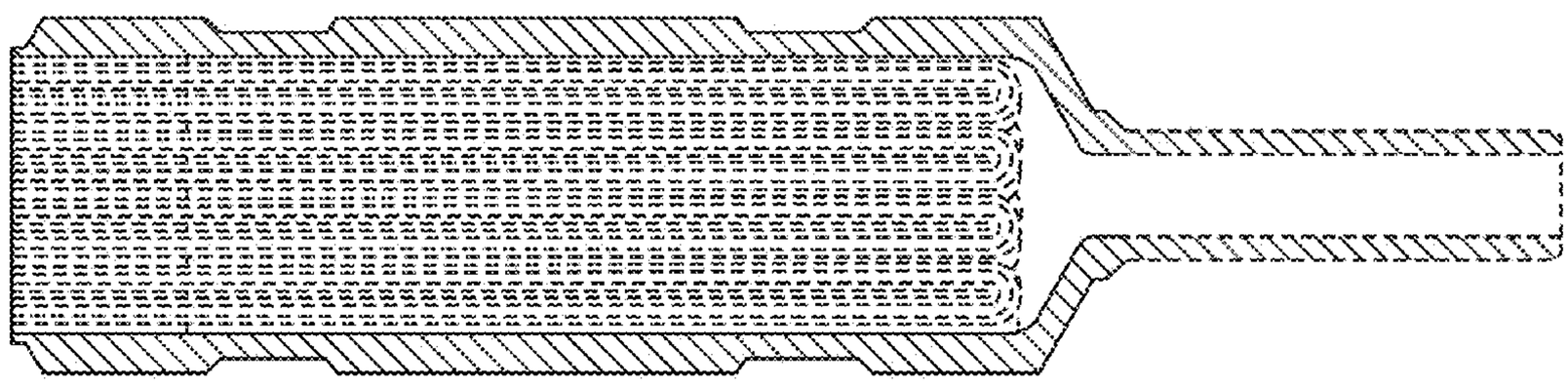
FIG. 9