US00D731663S

(12) United States Design Patent

Jung et al.

(10) Patent No.: US D731,663 S
(45) Date of Patent: ** Jun. 9, 2015

(54) **ORTHOSIS**

(71) Applicant: **OTTO BOCK HEALTHCARE GMBH**, Duderstadt (DE)

(72) Inventors: **Marcel Jung**, Duderstadt (DE); **Adam Wehsely-Swiczinsky**, Vienna (AT)

(73) Assignee: **OTTO BOCK HEALTHCARE GMBH**, Duderstadt (DE)

(**) Term: **14 Years**

(21) Appl. No.: **29/484,138**

(22) Filed: **Mar. 6, 2014**

(30) **Foreign Application Priority Data**

Sep. 9, 2013 (WO) 760460101

(51) **LOC (10) Cl.** **24-04**

(52) **U.S. Cl.**
USPC **D24/190**

(58) **Field of Classification Search**
USPC D24/155, 190; 602/16, 21, 23, 26; 623/18.1, 39, 44
CPC A61F 5/0123; A61F 2005/0167; A61F 5/0125; A61F 2002/704; A61F 2005/0139; A61F 2/68; A61F 2002/7635; A61F 2002/701; A61F 2002/705; A61F 2005/0179; A61F 2002/764; A61F 2/72; A61F 2002/7645; A61F 2/64; A61F 2/80; A61M 1/101; A61M 1/1015; A61M 25/02; A61M 1/1031
See application file for complete search history.

(56) **References Cited**

U.S. PATENT DOCUMENTS

D383,542	S	*	9/1997	Wellershaus et al.	D24/155
D402,368	S	*	12/1998	Holzapfel	D24/155
D407,490	S		3/1999	Zepf et al.	
D499,487	S	*	12/2004	Bedard et al.	D24/155
D523,959	S	*	6/2006	Muehlenberend	D24/155
D527,458	S	*	8/2006	Harn et al.	D24/155
D592,749	S	*	5/2009	Muhlenberend	D24/155
D655,817	S	*	3/2012	Schilling et al.	D24/190
D658,770	S		5/2012	Helm et al.	
8,251,935	B2	*	8/2012	Bonutti et al.	602/23
8,764,849	B2	*	7/2014	Omarsson et al.	623/44

FOREIGN PATENT DOCUMENTS

EM	001725771-0003	6/2010
EM	001725771-0005	6/2010

OTHER PUBLICATIONS

Fior & Gentz, System Joints and Articulated System Side Bars, Neuro Lock, http://www.fior-gentz.de/index.asp?tree_id=2694&wtree_id=2593&stree_id=2743#, (Apr. 2009).

Fior & Gentz, System Joints and Articulated System Side Bars, Neuro Flex Max, http://www.fior-gentz.de/index.asp?tree_id=2694&wtree_id=2593&stree_id=2746#, (Apr. 2009).

* cited by examiner

Primary Examiner — George D Kirschbaum
Assistant Examiner — Jennifer Watkins
(74) *Attorney, Agent, or Firm* — Holland & Hart

(57) **CLAIM**

The ornamental design for an orthosis, as shown and described.

DESCRIPTION

FIG. **1** is a perspective view of an orthosis according to the present invention;
FIG. **2** is a right side view thereof;
FIG. **3** is a front view thereof;
FIG. **4** is a top view thereof;
FIG. **5** is a left side view thereof;
FIG. **6** is a rear view thereof; and,
FIG. **7** is a bottom view thereof.
The broken lines in the drawings are for the purpose of illustrating portions of the orthosis that form no part of the claimed design.

1 Claim, 3 Drawing Sheets

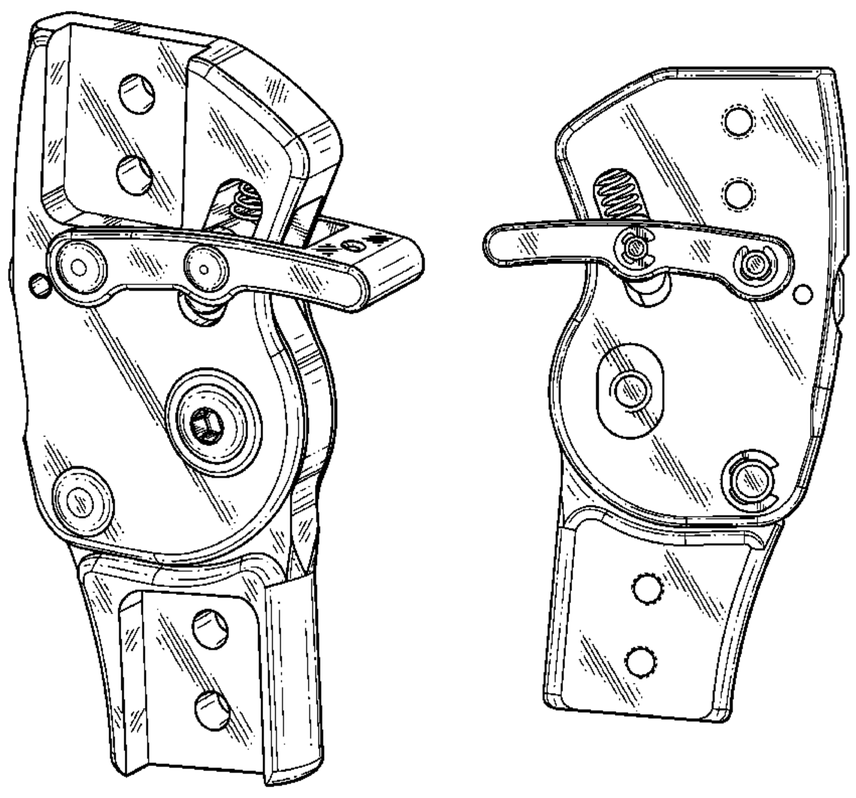

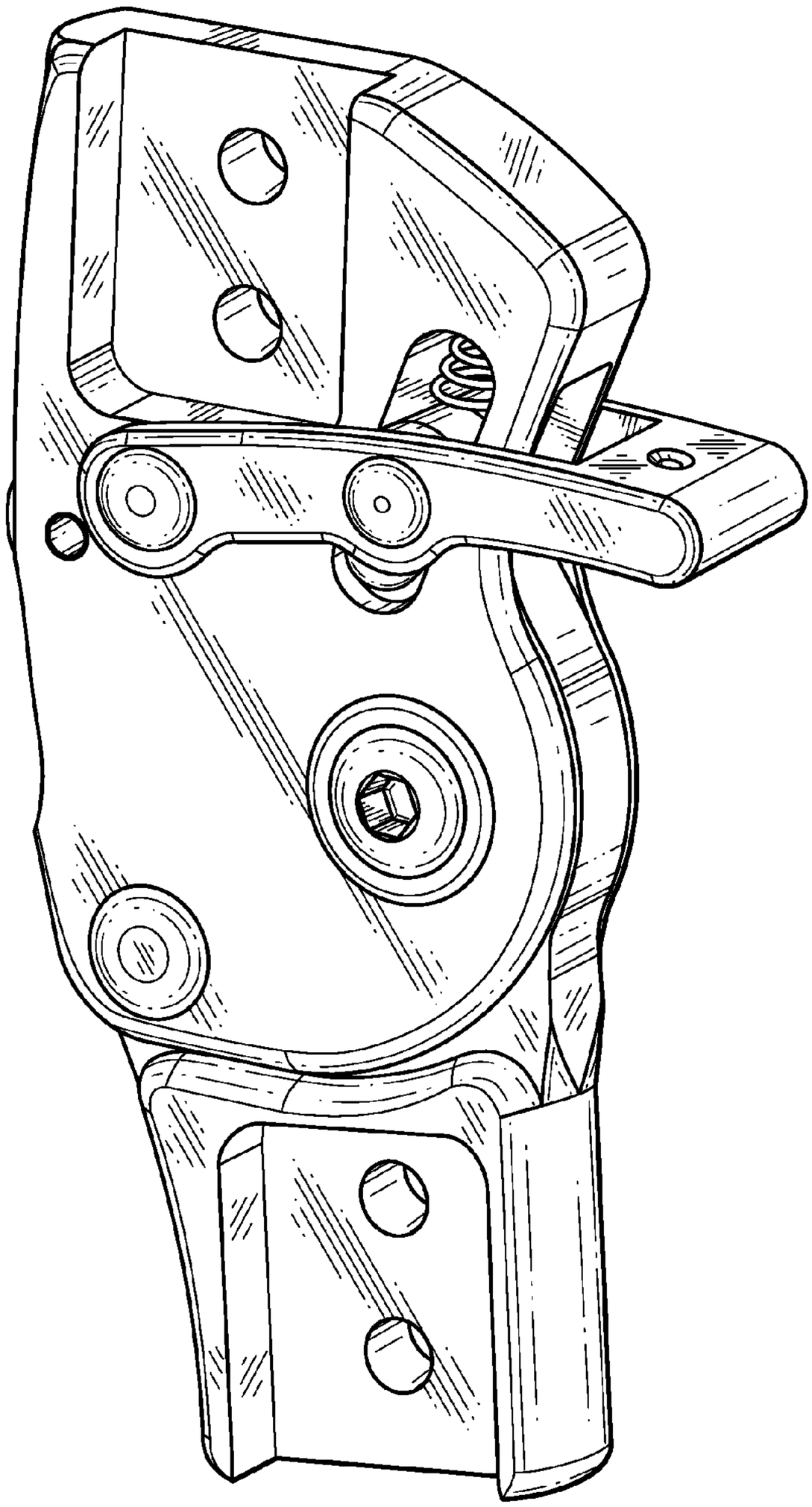

Fig. 1

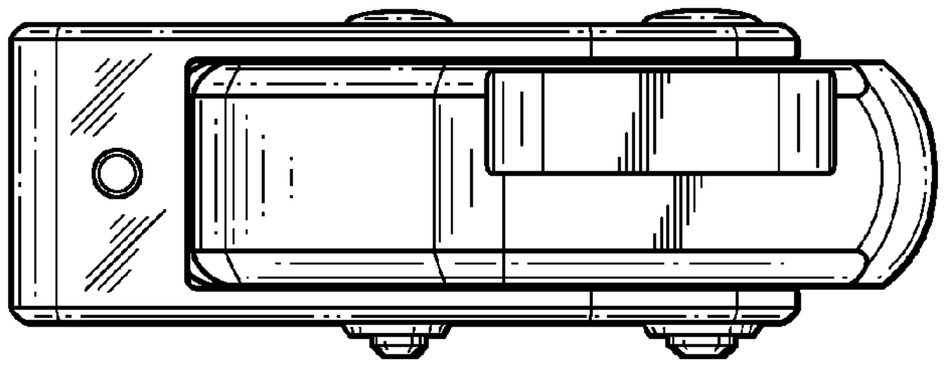

Fig. 4

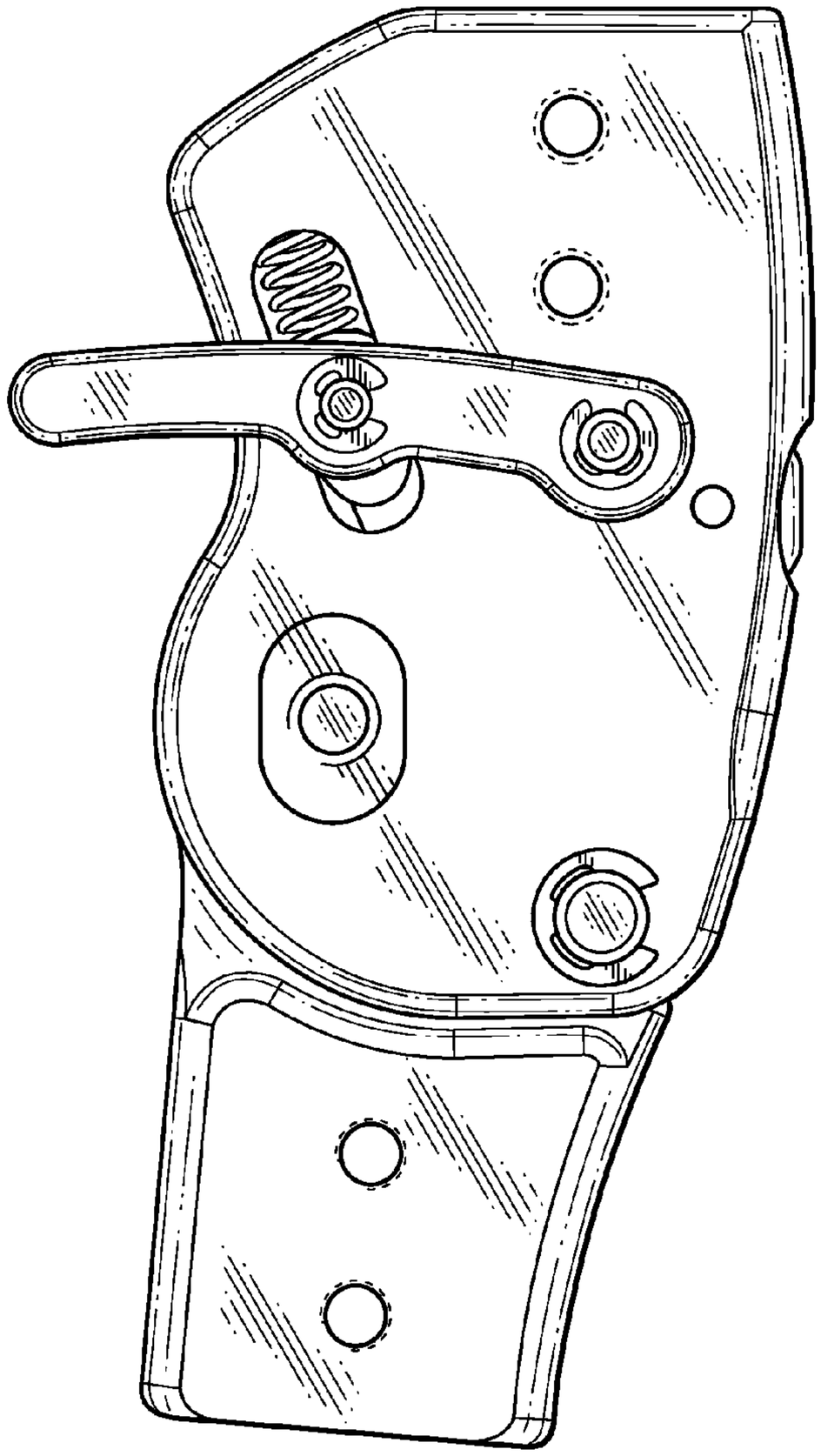

Fig. 2

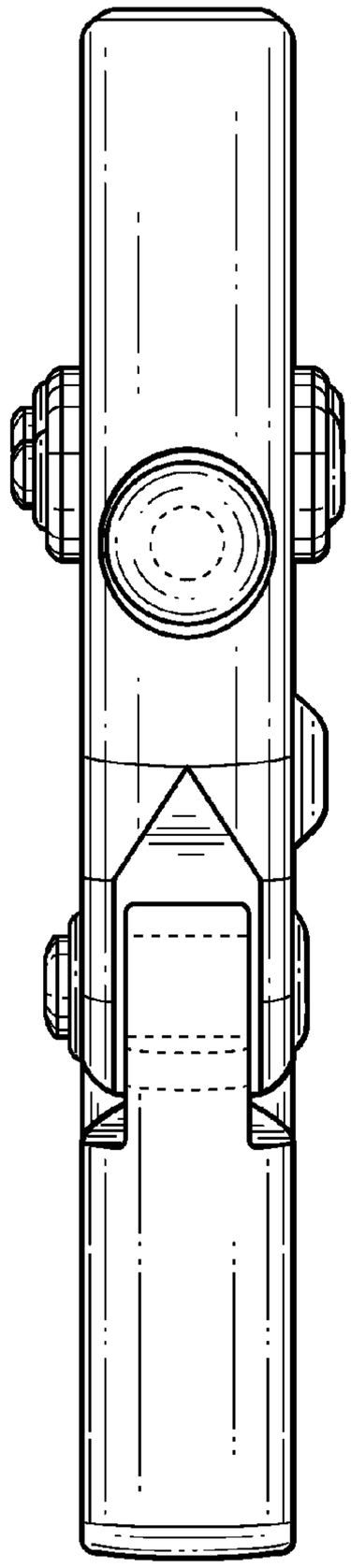

Fig. 3

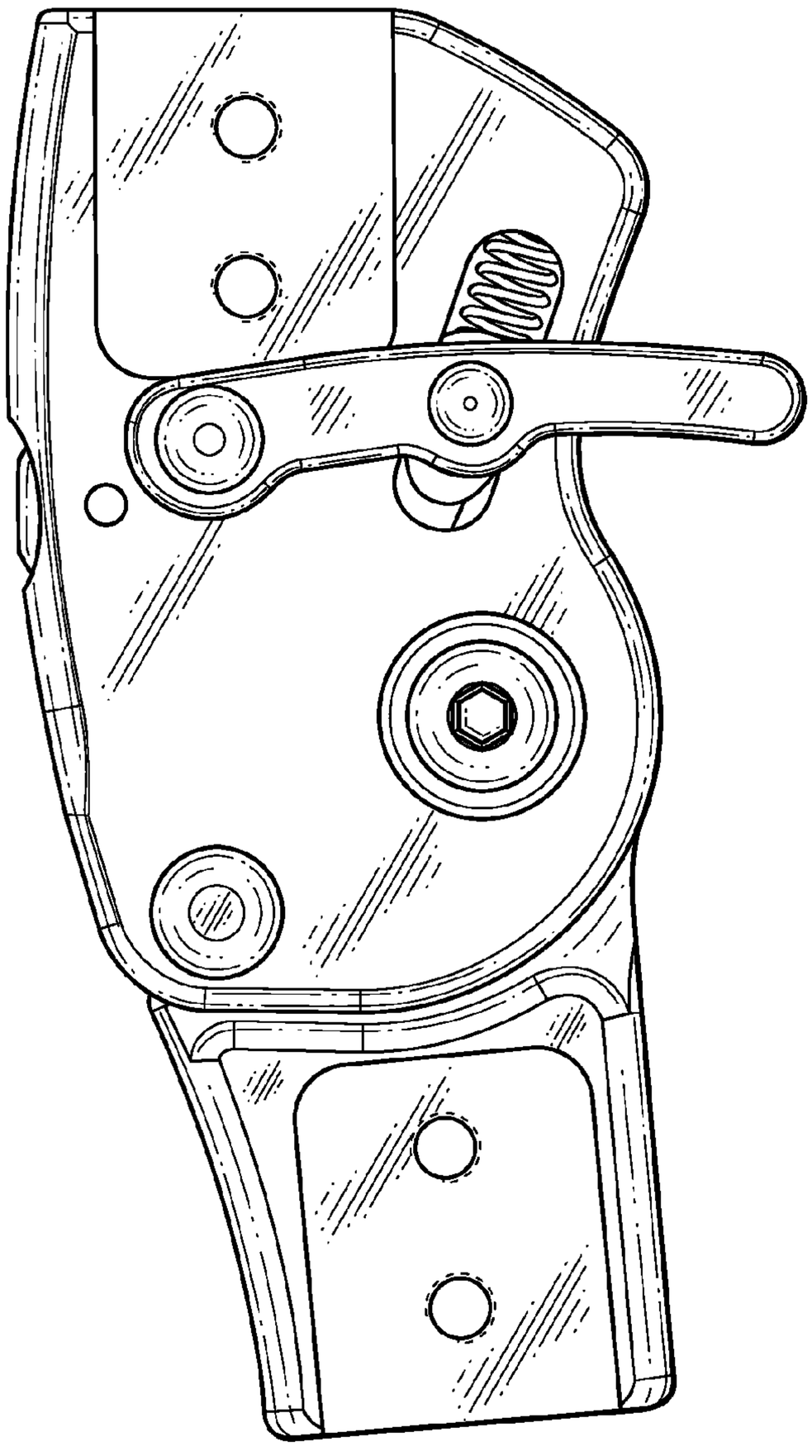

Fig. 5

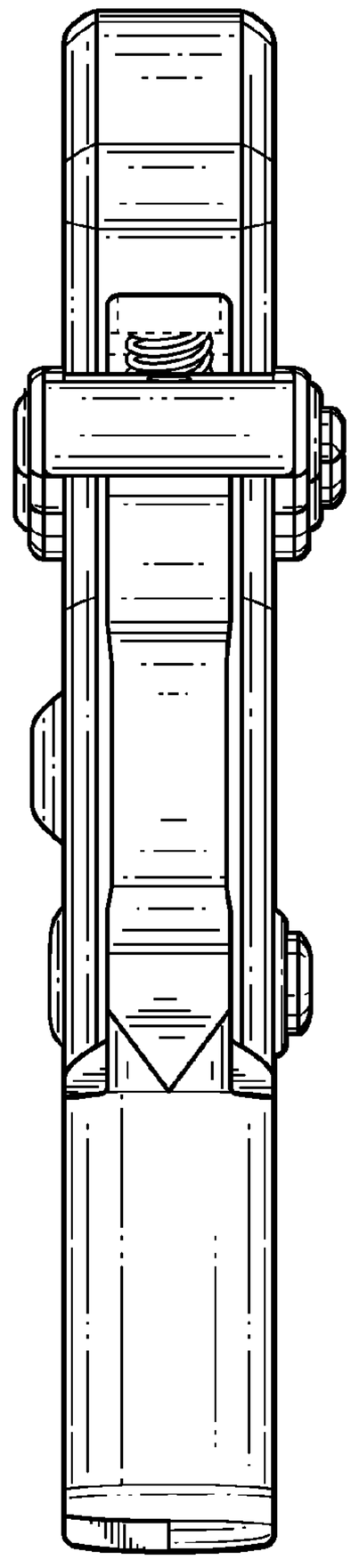

Fig. 6

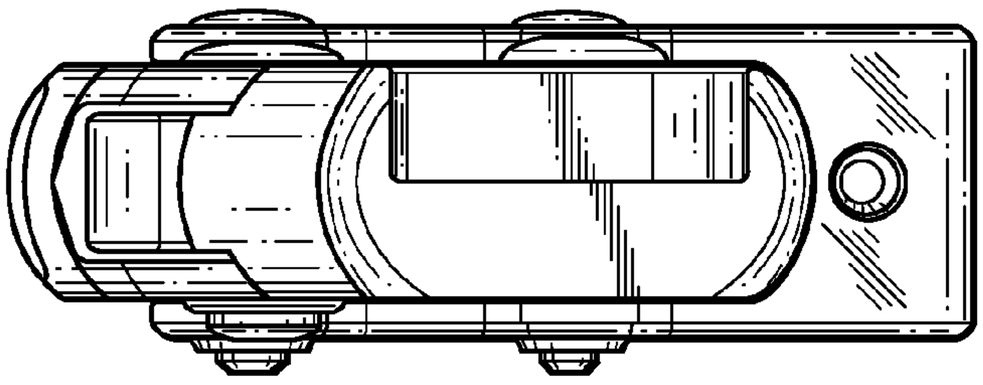

Fig. 7