US00D729753S

(12) United States Design Patent

Fukushima et al.

(10) Patent No.: US D729,753 S
(45) Date of Patent: ** May 19, 2015

(54) **ELASTIC MEMBRANE FOR SEMICONDUCTOR WAFER POLISHING**

(71) Applicant: **EBARA CORPORATION**, Tokyo (JP)

(72) Inventors: **Makoto Fukushima**, Tokyo (JP); **Hozumi Yasuda**, Tokyo (JP); **Osamu Nabeya**, Tokyo (JP); **Katsuhide Watanabe**, Tokyo (JP); **Keisuke Namiki**, Tokyo (JP)

(73) Assignee: **Ebara Corporation**, Tokyo (JP)

(**) Term: **14 Years**

(21) Appl. No.: **29/496,207**

(22) Filed: **Jul. 10, 2014**

Related U.S. Application Data

(62) Division of application No. 29/384,219, filed on Jan. 28, 2011, now Pat. No. Des. 711,330.

(30) **Foreign Application Priority Data**

Dec. 28, 2010 (JP) 2010-031213
Dec. 28, 2010 (JP) 2010-031214
Dec. 28, 2010 (JP) 2010-031215
Dec. 28, 2010 (JP) 2010-031216

(51) **LOC (10) Cl.** **13-03**

(52) **U.S. Cl.**
USPC **D13/182**

(58) **Field of Classification Search**
CPC B24B 37/30; B24B 41/061; B24B 49/16
USPC D13/182; 451/66, 288, 289
See application file for complete search history.

(56) **References Cited**

U.S. PATENT DOCUMENTS

645,938	A	3/1900	Brown
2,576,673	A	11/1951	Cole
3,064,984	A	11/1962	Mickle et al.
3,347,556	A	10/1967	Fleckenstein et al.
3,848,880	A	11/1974	Tanner
D244,533	S	5/1977	Eidelberg et al.
4,109,716	A	8/1978	Canalizo
4,421,330	A	12/1983	Burke
4,570,944	A	2/1986	Traub
D286,361	S	10/1986	Zieff

(Continued)

FOREIGN PATENT DOCUMENTS

EP	2005-0814728	A1	9/2007
JP	2000-167762	A	6/2000

(Continued)

Primary Examiner — Selina Sikder
(74) *Attorney, Agent, or Firm* — Sughrue Mion, PLLC

(57) **CLAIM**

The ornamental design for an elastic membrane for semiconductor wafer polishing, as shown and described.

DESCRIPTION

FIG. **1** is a front view of an elastic membrane for semiconductor wafer polishing showing our new design;
FIG. **2** is a rear view thereof;
FIG. **3** is a bottom view thereof;
FIG. **4** is a plan view thereof;
FIG. **5** is a left side view thereof;
FIG. **6** is a right side view thereof;
FIG. **7** is a cross-section view taken along the line **7-7** of FIG. **2** thereof;
FIG. **8** is a enlarged view of part **8** of FIG. **7** thereof; and,
FIG. **9** is a enlarged perspective view, observed from above thereof.
The broken lines depict environmental subject matter only and form no part of the claimed design.

1 Claim, 3 Drawing Sheets

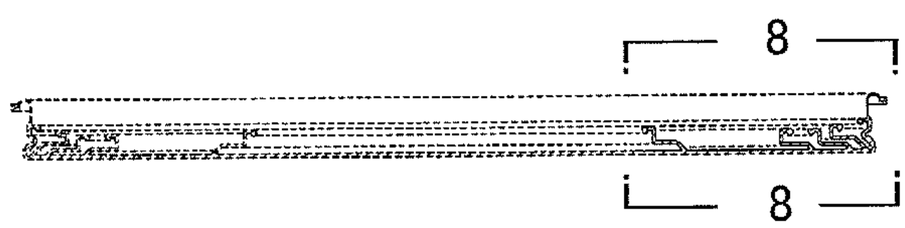

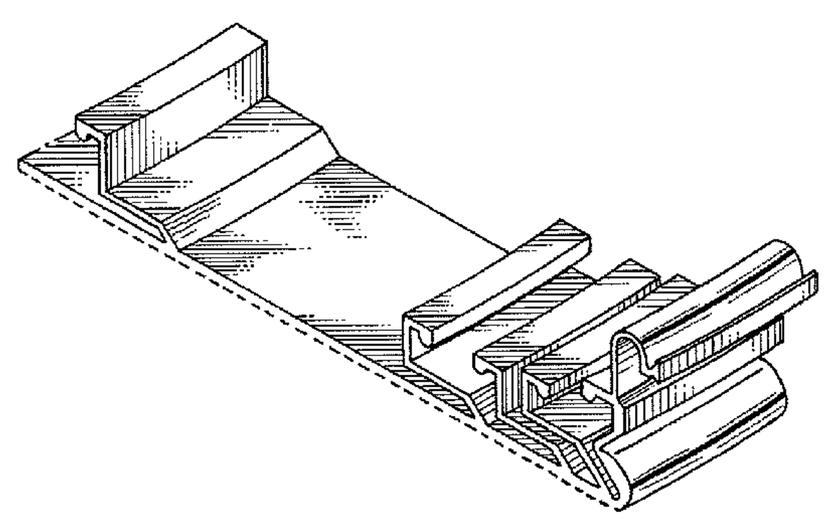

(56) **References Cited**

U.S. PATENT DOCUMENTS

4,709,522	A	12/1987	Carnahan	
D304,862	S	11/1989	DiCola	
5,422,316	A	6/1995	Desai et al.	
5,964,653	A	10/1999	Perlov et al.	
6,056,632	A	5/2000	Mitchel et al.	
6,110,026	A	8/2000	Arai	
6,116,992	A	9/2000	Prince	
6,147,001	A	11/2000	Kimura et al.	
6,159,079	A	12/2000	Zuniga et al.	
6,183,354	B1	2/2001	Zuniga et al.	
6,217,433	B1	4/2001	Herrman et al.	
6,296,555	B1	10/2001	Inaba et al.	
6,305,695	B1	10/2001	Wilson	
6,315,649	B1	11/2001	Hu et al.	
6,358,129	B2	3/2002	Dow	
6,494,769	B1	12/2002	Sinclair et al.	
6,666,948	B2	12/2003	Nguyen	
6,722,965	B2	4/2004	Zuniga et al.	
6,739,958	B2	5/2004	Chao et al.	
6,852,019	B2	2/2005	Togawa et al.	
6,857,945	B1	2/2005	Chen et al.	
6,872,130	B1	3/2005	Zuniga	
6,890,402	B2	5/2005	Gunji et al.	
6,923,714	B1	8/2005	Zuniga et al.	
6,988,942	B2	1/2006	Chen et al.	
7,025,664	B2	4/2006	Korovin et al.	
7,033,260	B2	4/2006	Togawa et al.	
7,083,507	B2	8/2006	Togawa et al.	
7,235,139	B2	6/2007	Boguslavskiy et al.	
D546,784	S	7/2007	Hayashi	
D548,705	S	8/2007	Hayashi	
7,255,771	B2	8/2007	Chen et al.	
7,311,585	B2	12/2007	Togawa et al.	
7,357,699	B2	4/2008	Togawa et al.	
7,402,098	B2	7/2008	Severson et al.	
7,479,304	B2	1/2009	Sun et al.	
7,491,117	B2	2/2009	Togawa et al.	
7,632,173	B2	12/2009	Togawa et al.	
7,635,292	B2	12/2009	Togawa et al.	
D609,652	S	2/2010	Nagasaka et al.	
D609,655	S	2/2010	Sugimoto	
D616,390	S	5/2010	Sato	
D633,452	S	3/2011	Namiki et al.	
D634,719	S	3/2011	Yasuda et al.	
D638,523	S	5/2011	Yoshida et al.	
7,988,537	B2	8/2011	Togawa et al.	
8,021,215	B2 *	9/2011	Zuniga et al.	451/398
D649,126	S	11/2011	Takahashi	
D650,053	S	12/2011	Douglass, III	
D655,797	S	3/2012	Muramatsu	
8,202,140	B2	6/2012	Hong et al.	
D681,176	S	4/2013	Chacko	
8,454,413	B2 *	6/2013	Oh et al.	451/402
8,469,776	B2 *	6/2013	Zuniga et al.	451/398
D696,751	S	12/2013	Beagen, Jr.	
D711,330	S *	8/2014	Fukushima et al.	D13/182
8,808,062	B2 *	8/2014	Oh et al.	451/402
8,859,070	B2 *	10/2014	Yasuda et al.	428/64.1
8,932,106	B2 *	1/2015	Fukushima et al.	451/5
8,939,817	B2 *	1/2015	Son	451/398
2002/0086624	A1	7/2002	Zuniga et al.	
2003/0057089	A1	3/2003	Nguyen	
2003/0171076	A1	9/2003	Molone et al.	
2004/0175951	A1	9/2004	Chen	
2008/0070479	A1	3/2008	Nabeya et al.	
2008/0119119	A1	5/2008	Zuniga et al.	
2009/0233532	A1	9/2009	Togawa et al.	
2009/0247057	A1	10/2009	Kobayashi et al.	
2013/0316628	A1 *	11/2013	Jang et al.	451/398

FOREIGN PATENT DOCUMENTS

JP	2000-301452	A	10/2000
JP	2002-075936	A	3/2002
JP	2002-527894	A	8/2002
JP	2004-297029	A	10/2004
JP	2004-363505	A	12/2004
JP	2006-159392	A	6/2006
JP	2006-255851	A	9/2006
JP	3937368	B	4/2007
KR	30-0526799	S	4/2009
KR	30-0526801	S	4/2009

* cited by examiner

FIG. 1

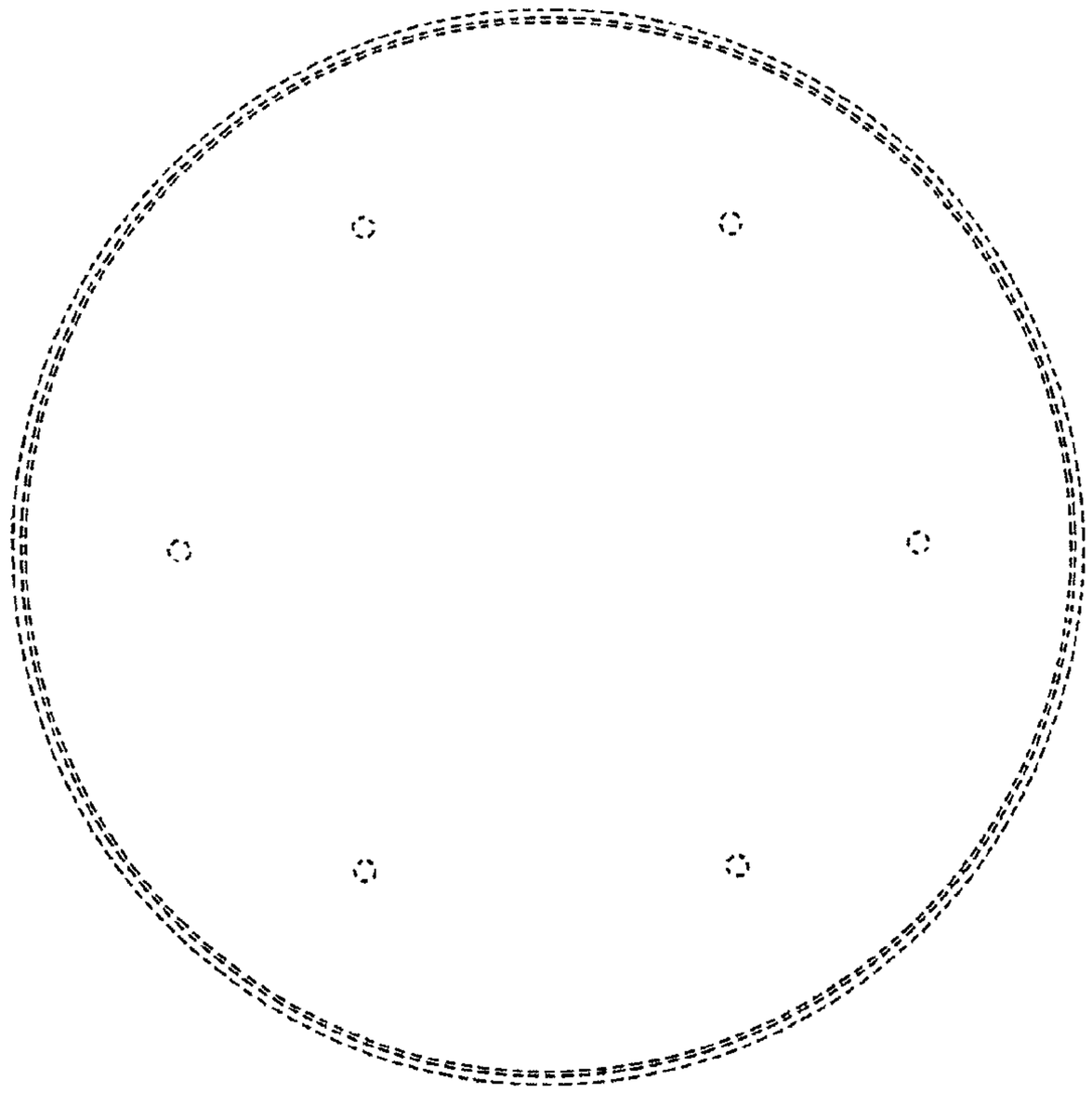

FIG. 2

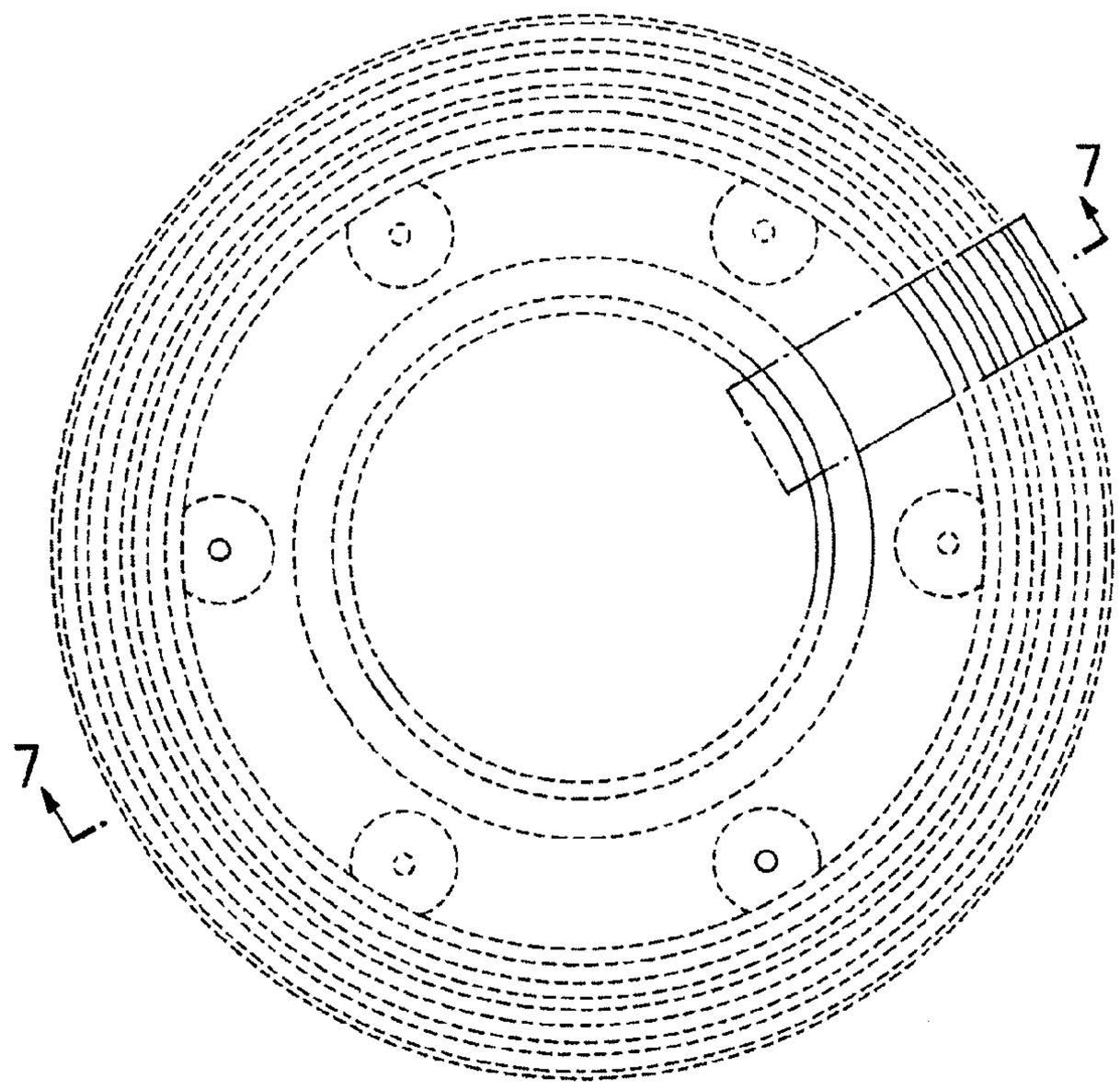

FIG. 3

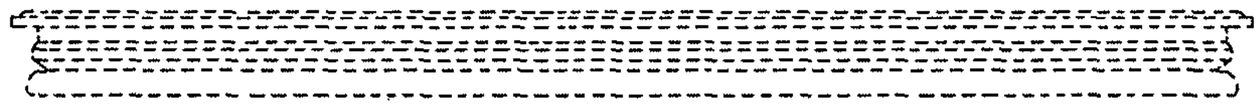

FIG. 4

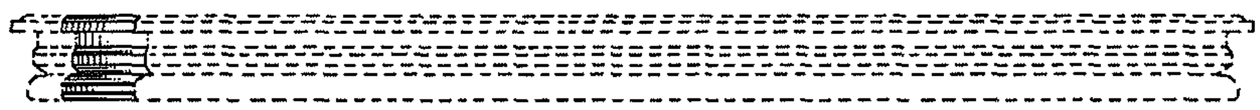

FIG. 5

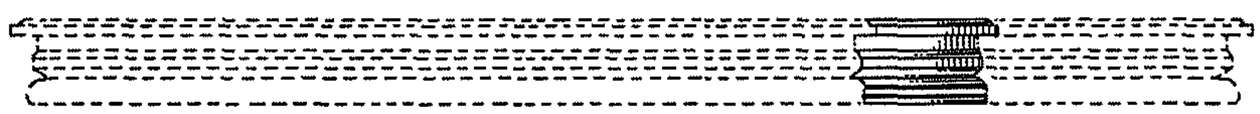

FIG. 6

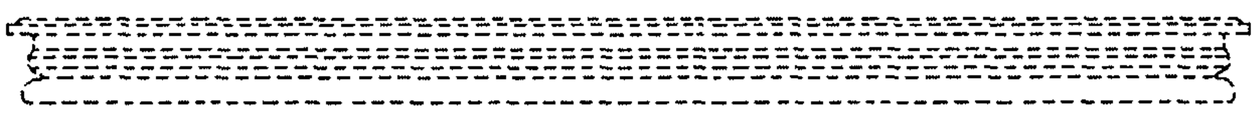

FIG. 7

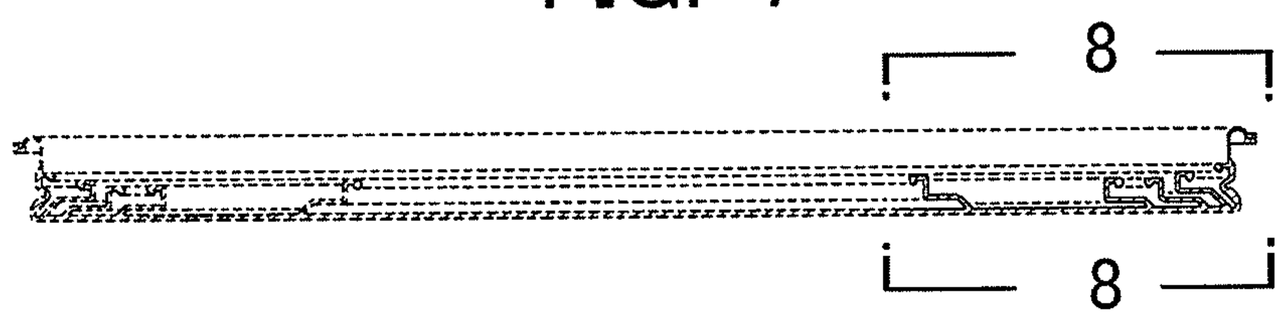

FIG. 8

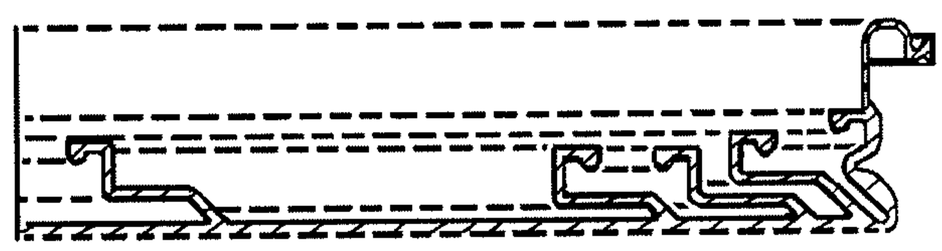
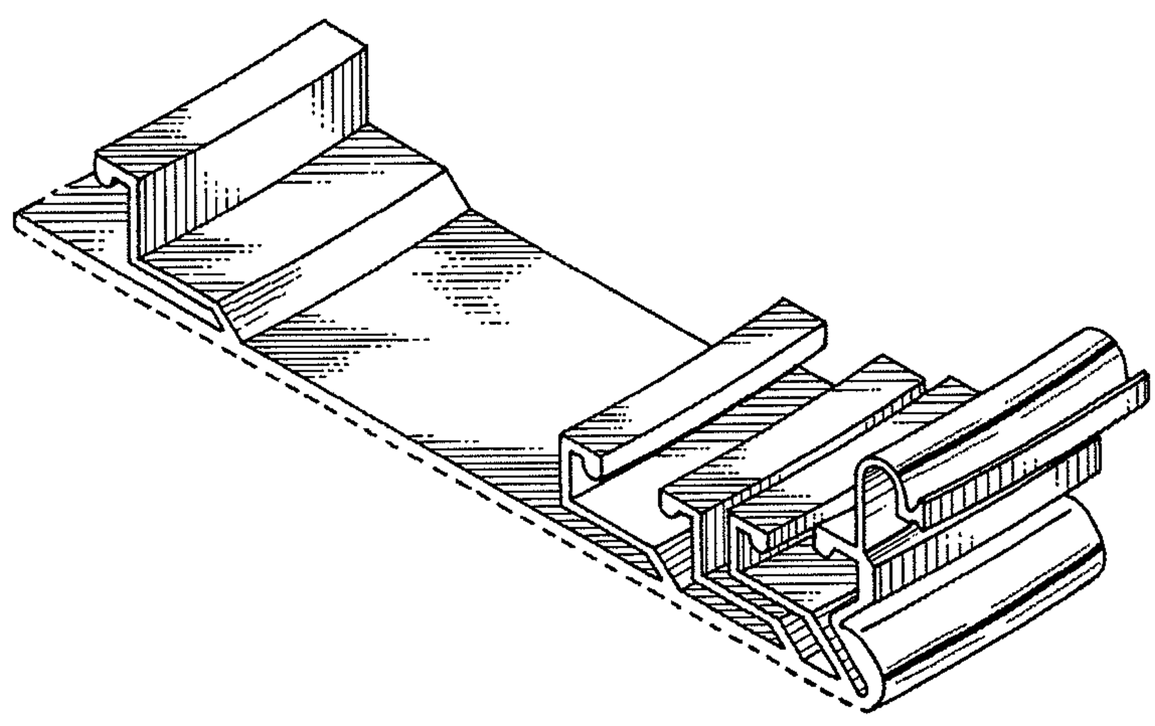
FIG. 9