US00D729017S

(12) United States Design Patent
Woog

(10) Patent No.: US D729,017 S
(45) Date of Patent: ** May 12, 2015

(54) **COOLER FOR BEVERAGE CONTAINERS**

(71) Applicant: **Gunter Woog**, West Bend, WI (US)

(72) Inventor: **Gunter Woog**, West Bend, WI (US)

(**) Term: **14 Years**

(21) Appl. No.: **29/490,848**

(22) Filed: **May 14, 2014**

Related U.S. Application Data

(63) Continuation of application No. 13/936,600, filed on Jul. 8, 2013, now abandoned.

(51) **LOC (10) Cl.** **07-01**

(52) **U.S. Cl.**
USPC **D7/605**

(58) **Field of Classification Search**
CPC ... F25D 31/007; F25D 3/06; F25D 2331/805; F25D 27/00
USPC D7/605–608, 619.1–625; 62/457.1–457.9, 371, 372, 458; 220/592.16, 592.2, 592.25, 515, 513, 220/509, 507, 592.17, 592.03, 672, 670, 220/915.1, 915.2, 669, 628, 675; 206/457, 206/139, 427, 429; 215/392–396; 211/74, 211/71.01; 248/346.11
See application file for complete search history.

(56) **References Cited**

U.S. PATENT DOCUMENTS

D283,317	S	*	4/1986	Stewart	D12/423
4,704,875	A	*	11/1987	Kieler	62/372
6,360,558	B1	*	3/2002	Woog	62/457.5
D474,686	S		5/2003	Woog	
6,802,802	B2		10/2004	Woog	
7,097,034	B2		8/2006	Woog	
2011/0252824	A1	*	10/2011	Dallas et al.	62/457.5

* cited by examiner

Primary Examiner — Terry Wallace
(74) *Attorney, Agent, or Firm* — Donald J. Ersler

(57) **CLAIM**

The ornamental design for the cooler for beverage containers, as shown and described.

DESCRIPTION

FIG. **1** is a front perspective view of a cooler for beverage containers incorporating my new design;
FIG. **2** is a bottom perspective view thereof;
FIG. **3** is a top plan view thereof;
FIG. **4** is a bottom plan view thereof;
FIG. **5** is a right or left side view thereof;
FIG. **6** is a front elevation view thereof; and,
FIG. **7** is a top perspective view thereof.
The broken lines shown in the drawings illustrate portions of the cooler for beverage containers that forms no part of the claimed design.

1 Claim, 6 Drawing Sheets

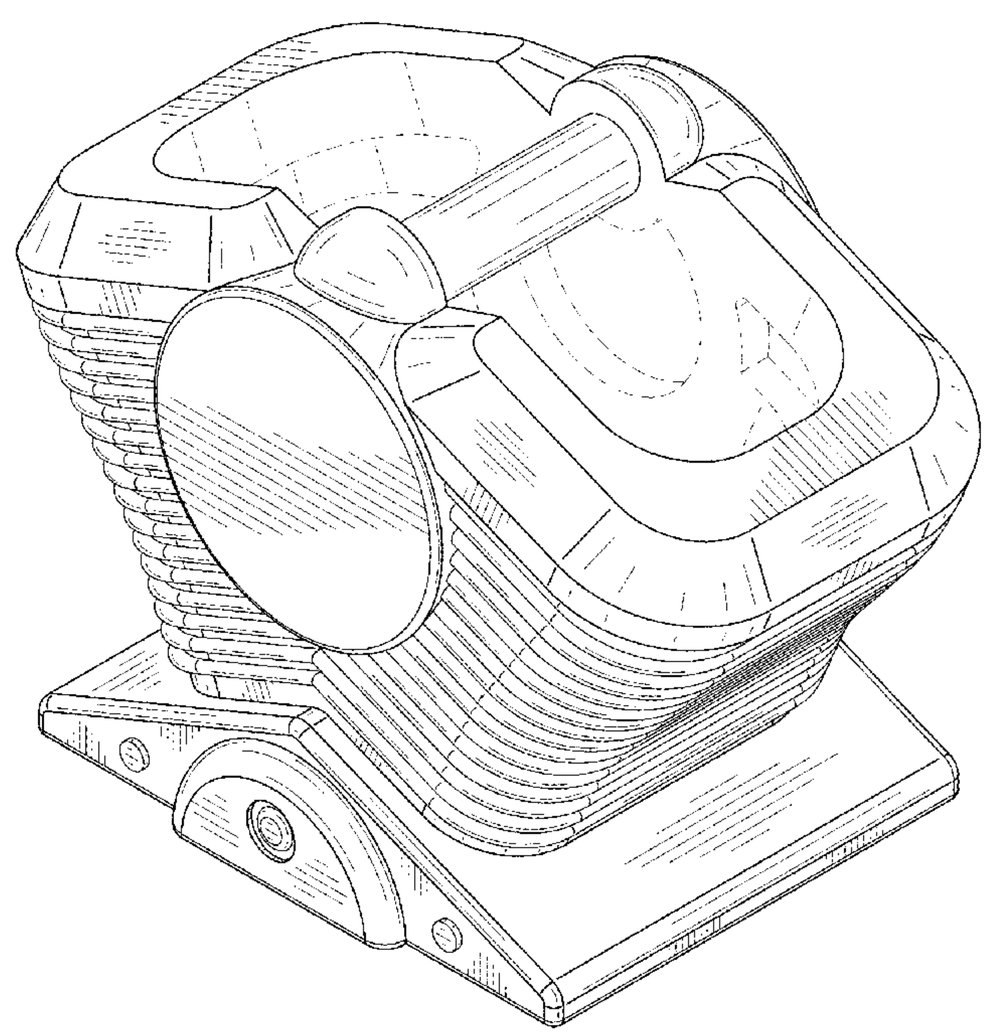

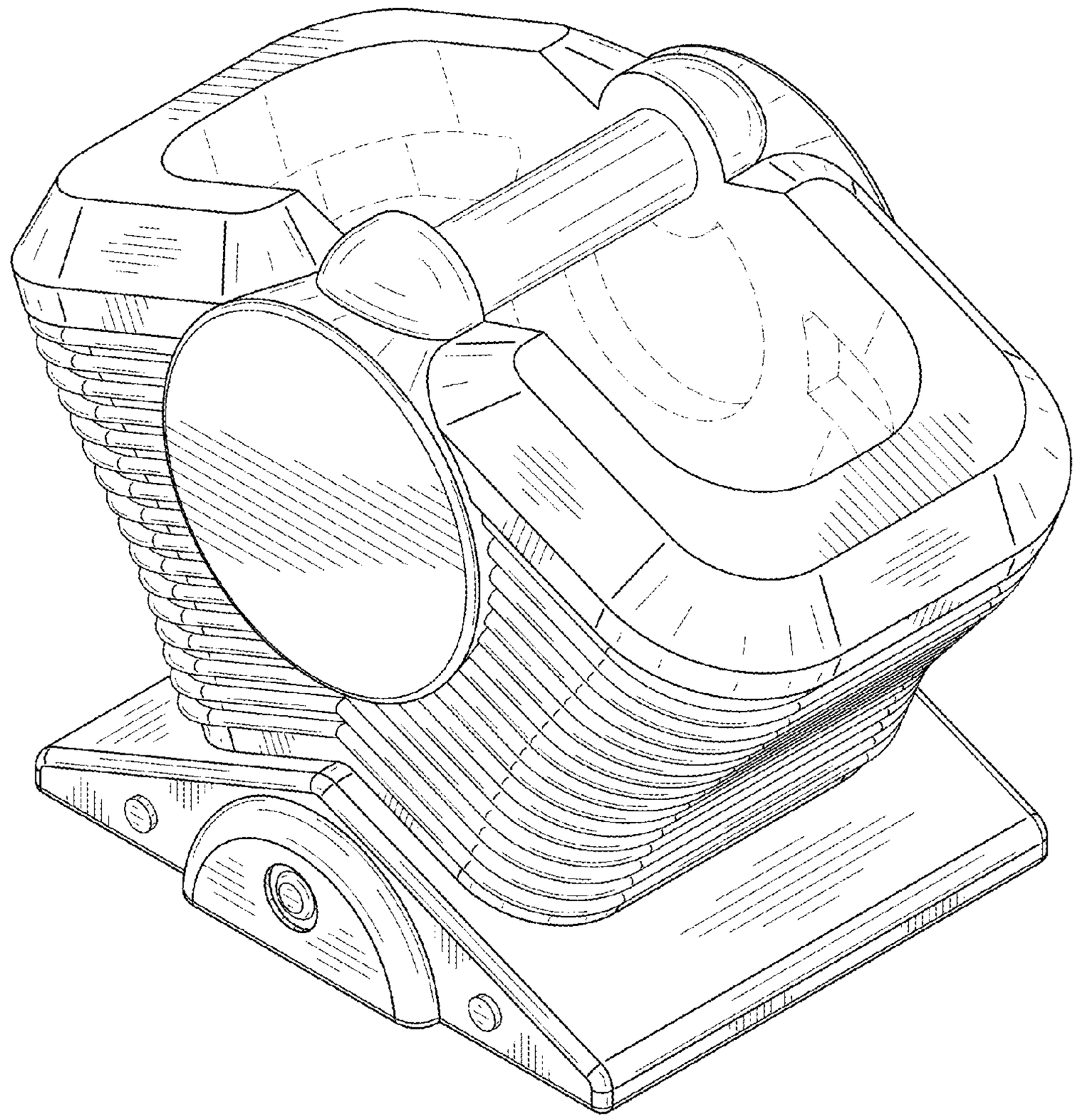

FIG. 1

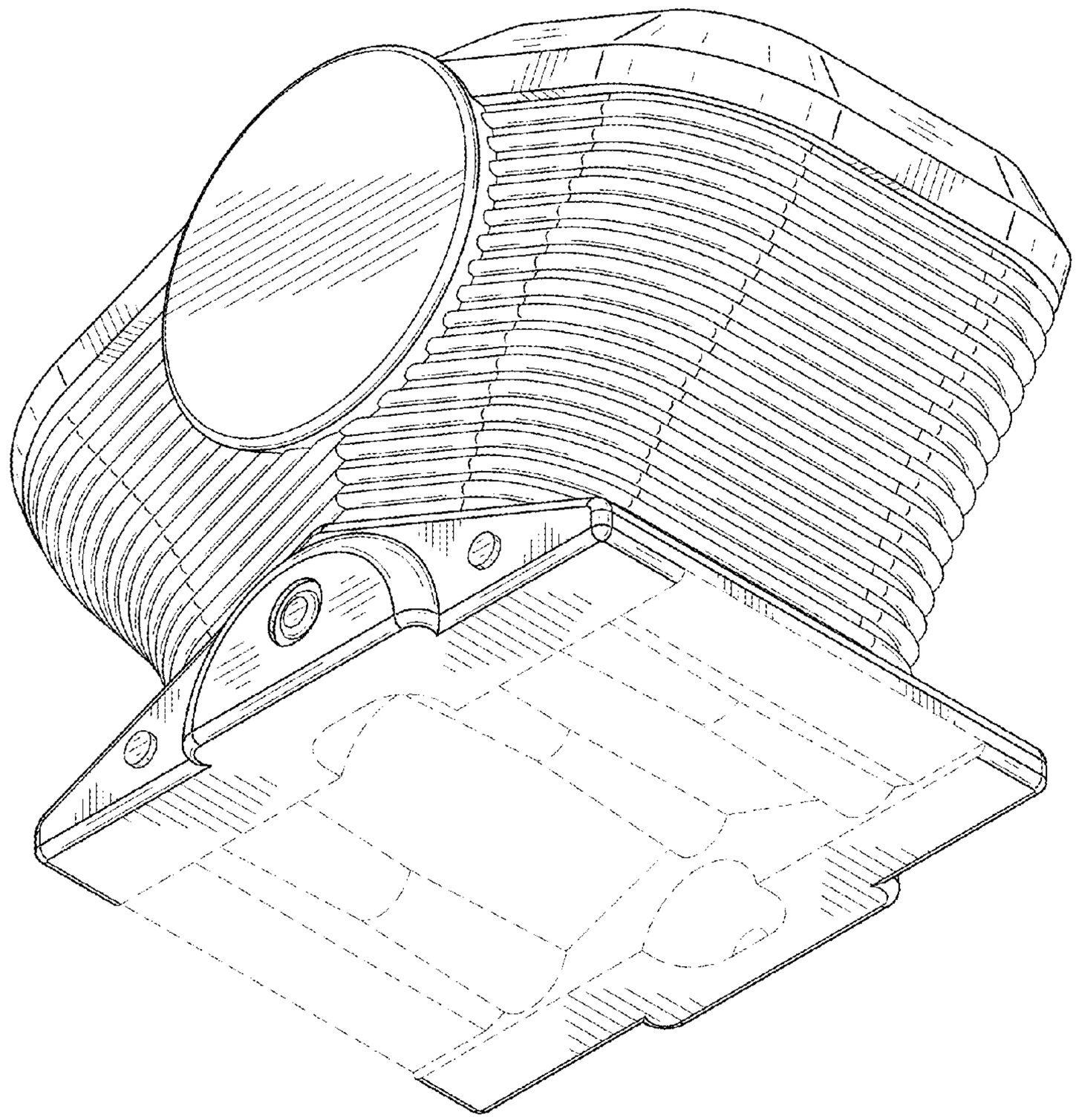

FIG. 2

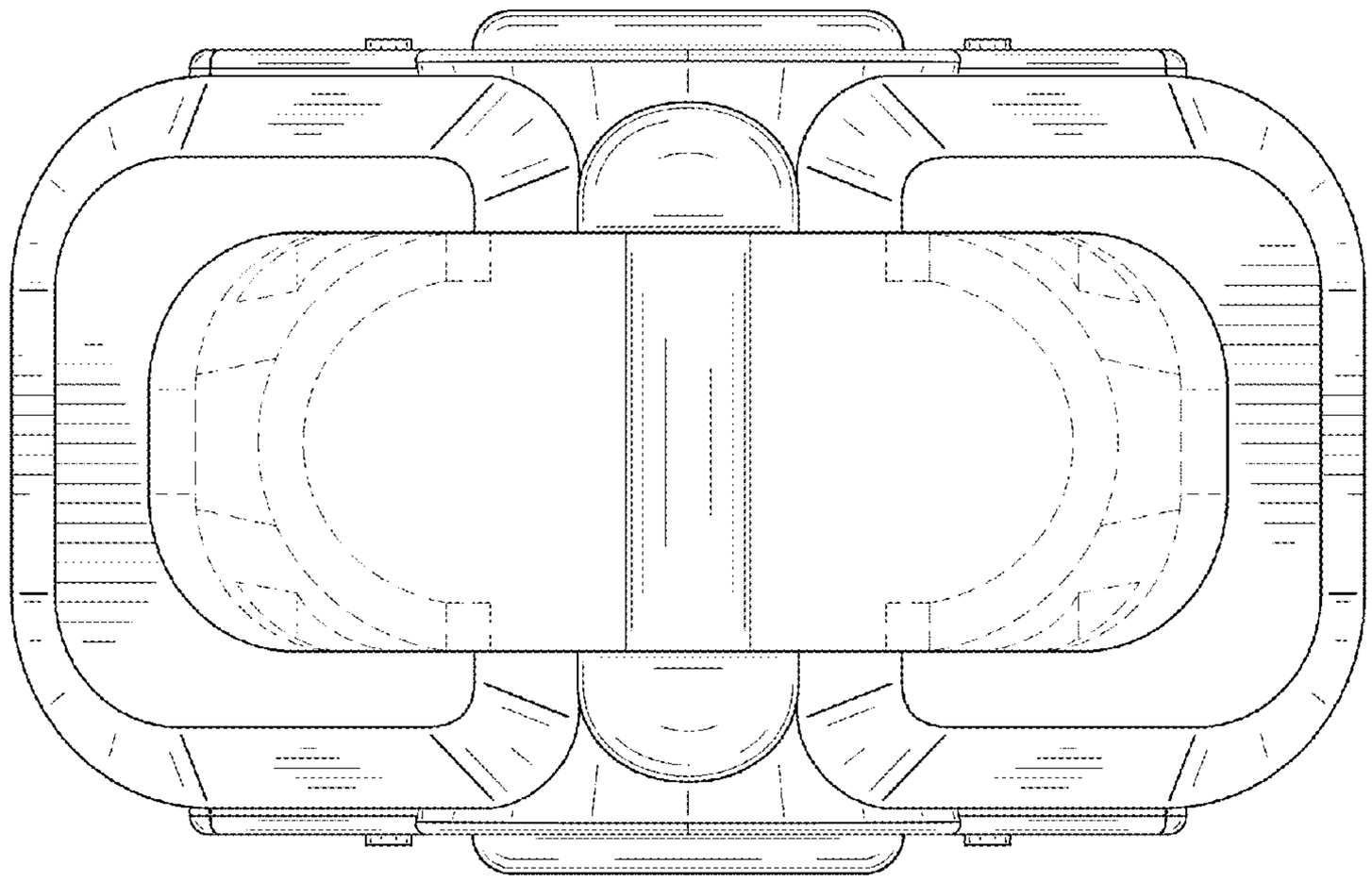

FIG. 3

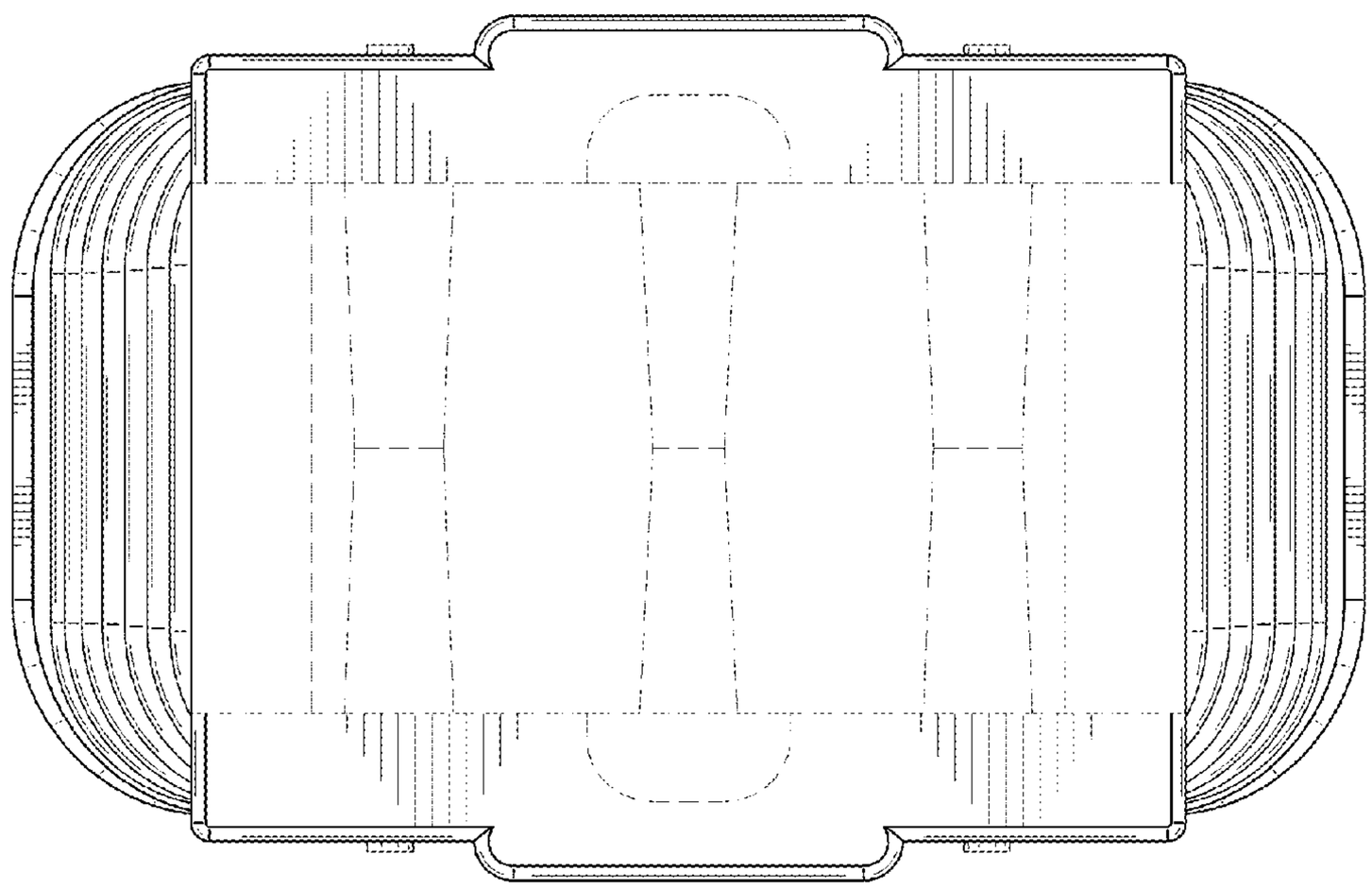

FIG. 4

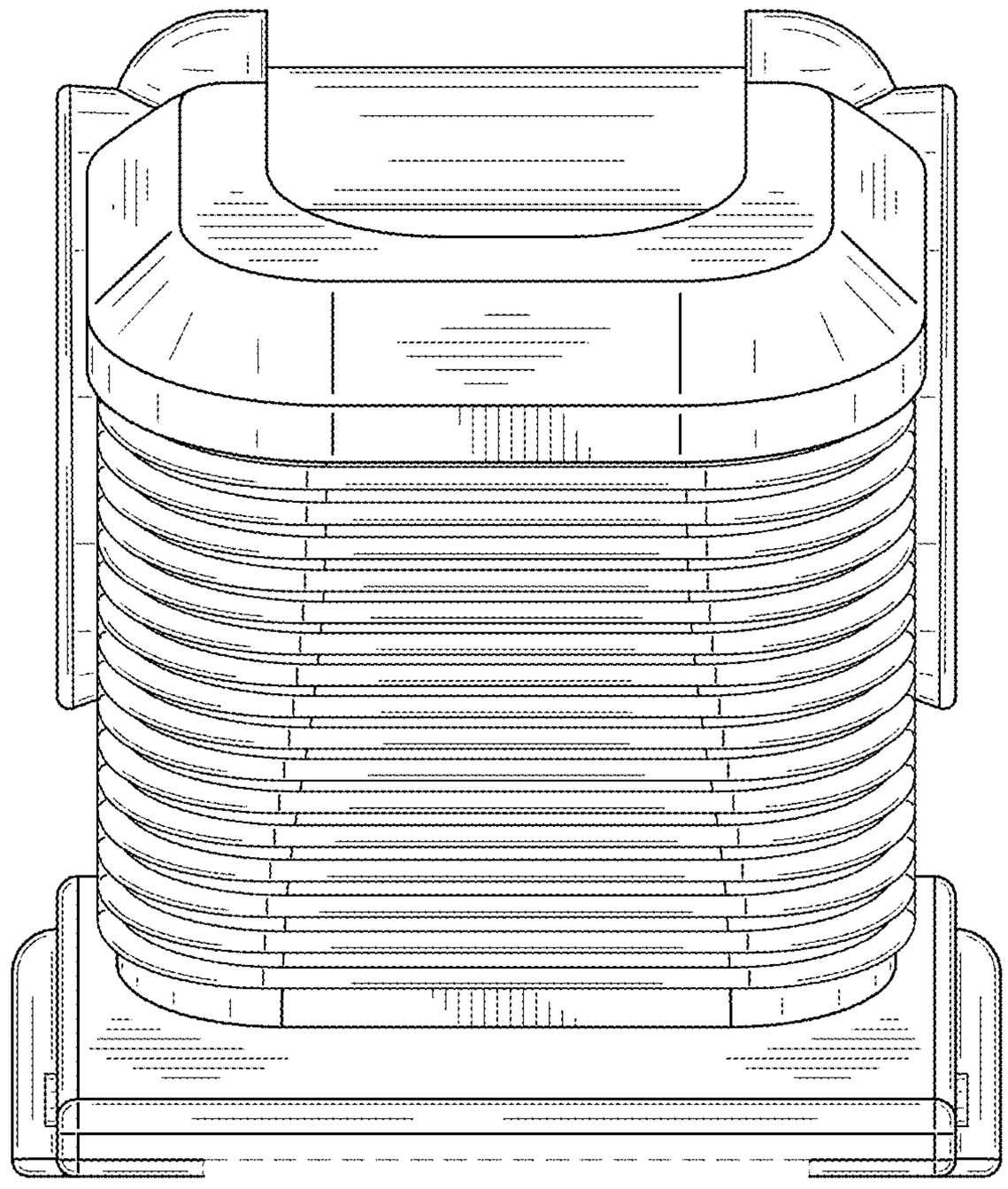

FIG. 5

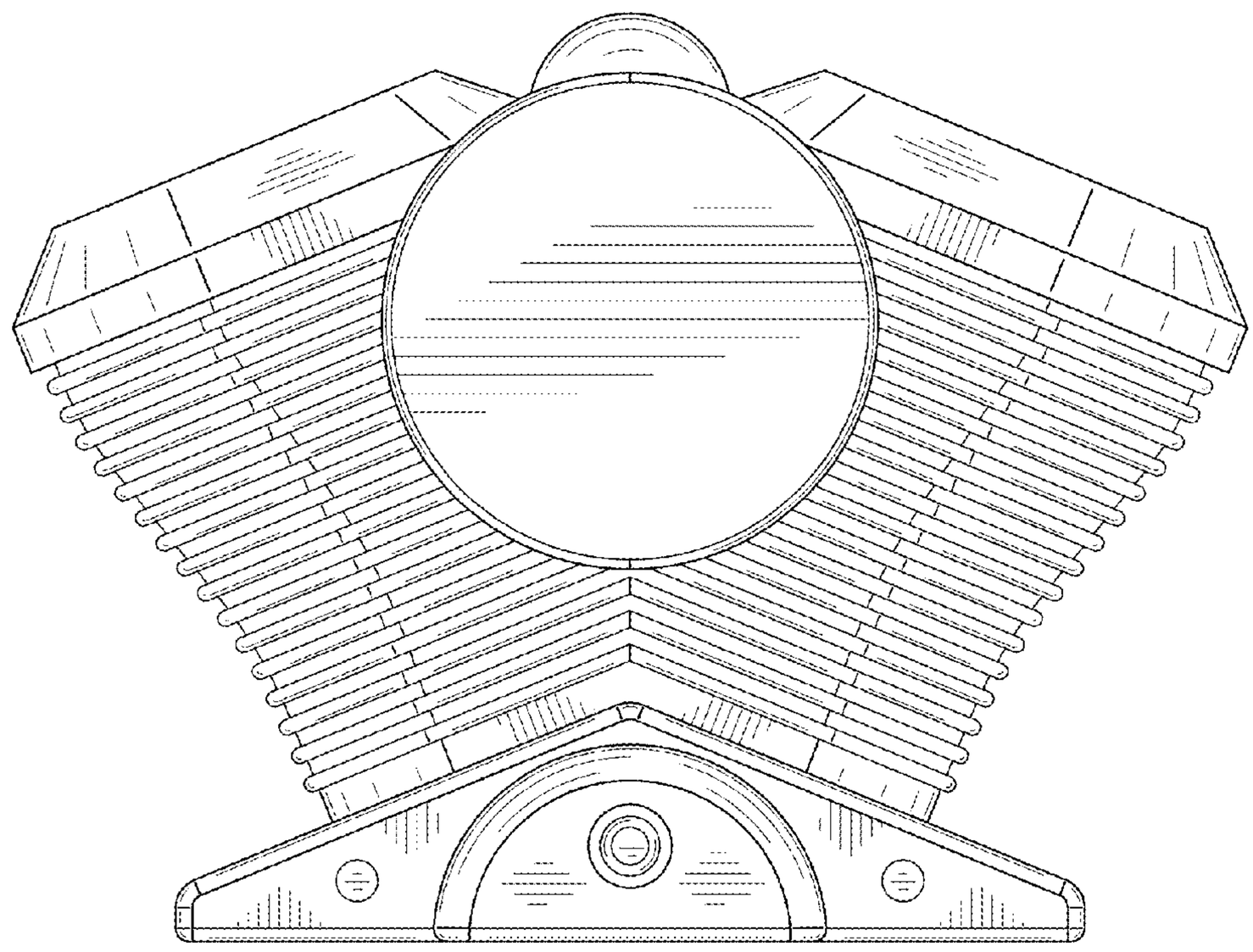

FIG. 6

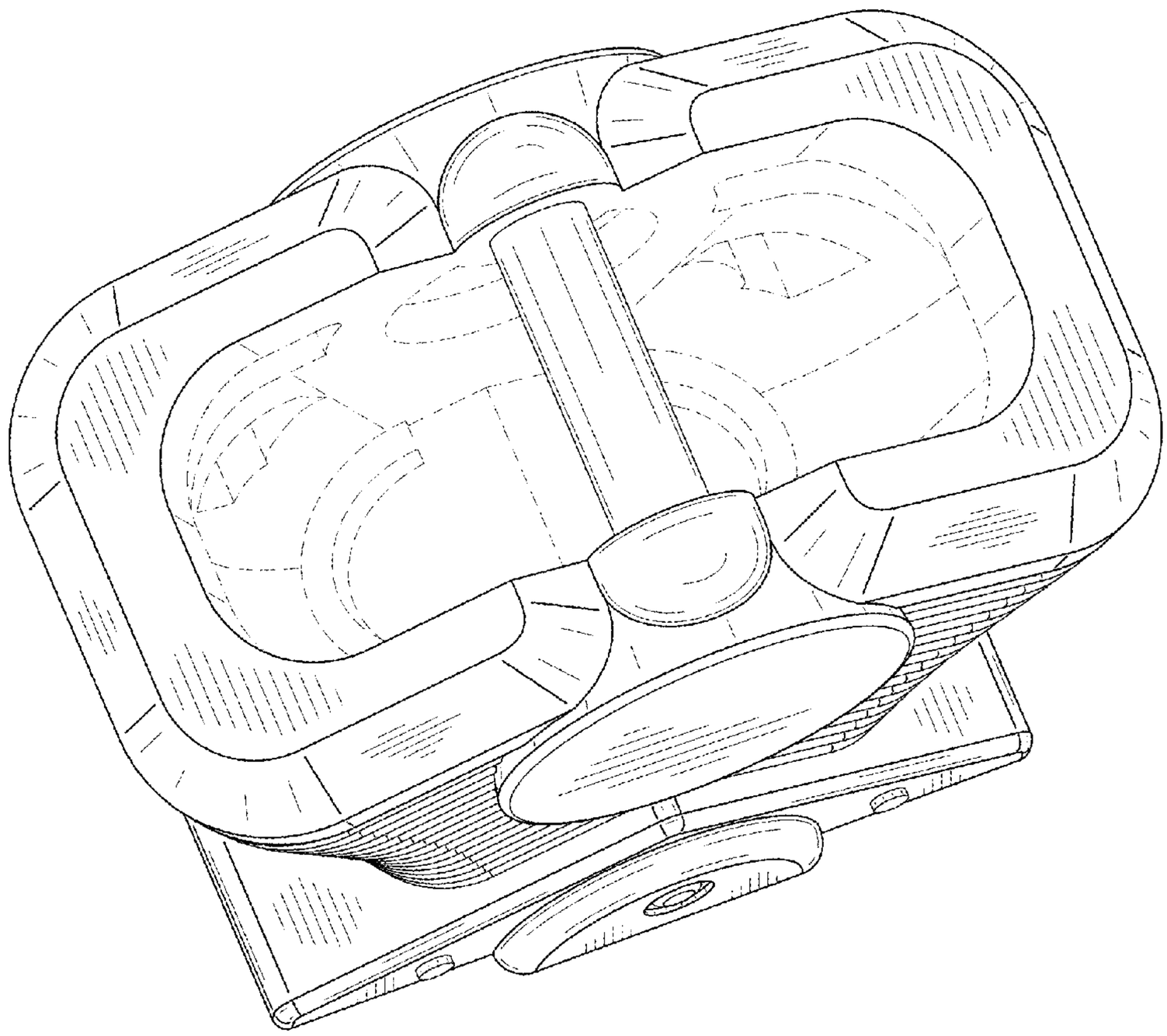

FIG. 7