US00D728267S

# (12) United States Design Patent
Cha

(10) Patent No.: US D728,267 S
(45) Date of Patent: ** May 5, 2015

(54) **BLIND FABRIC**

(71) Applicant: **Daekyeong Triple Co., Ltd.**, Daegu (KR)

(72) Inventor: **Sang-Gun Cha**, Daegu (KR)

(73) Assignee: **Daekyeong Triple Co., Ltd.**, Daegu (KR)

(**) Term: **14 Years**

(21) Appl. No.: **29/482,948**

(22) Filed: **Feb. 24, 2014**

(30) **Foreign Application Priority Data**

Nov. 7, 2013 (KR) ..... 30-2013-0055965

(51) **LOC (10) Cl.** ..... **06-10**

(52) **U.S. Cl.**
USPC ..... **D6/575**

(58) **Field of Classification Search**
CPC ..... E06B 3/30; E06B 9/00; E06B 9/02; E06B 9/24; E06B 9/262; A47H 1/00; A47H 21/00; A47H 23/00; A47H 23/02; A47H 23/04; A47H 2023/025
USPC ..... D6/575, 576, 577, 578, 579, 580, 581; 160/84.01, 84.02, 84.03, 84.04, 84.05, 160/84.06, 84.07, 84.08, 107, 108, 111, 160/113, 130, 133; D5/1, 2, 3, 4, 7, 41, 46, D5/47, 48, 49, 50, 51, 52, 53, 54, 56, 58
See application file for complete search history.

(56) **References Cited**

U.S. PATENT DOCUMENTS


| | | | | | |
|---|---|---|---|---|---|
| 2,129,504 | A * | 9/1938 | Prindle | 139/420 R |
| 2,627,918 | A * | 2/1953 | Gordon | 160/348 |
| 3,999,590 | A * | 12/1976 | Koch | 160/84.01 |
| D440,093 | S * | 4/2001 | Siegel et al. | D6/575 |
| D440,094 | S * | 4/2001 | Shen | D6/575 |
| D509,089 | S * | 9/2005 | Titus et al. | D6/575 |
| 7,624,784 | B2 * | 12/2009 | Anthony et al. | 160/120 |
| D636,204 | S * | 4/2011 | Elinson et al. | D6/575 |
| 8,020,602 | B2 * | 9/2011 | Smith et al. | 160/121.1 |
| D651,438 | S * | 1/2012 | Lin | D6/575 |
| 8,122,931 | B2 * | 2/2012 | Lin | 160/84.01 |
| D659,455 | S * | 5/2012 | Marocco | D6/575 |
| 8,316,911 | B2 * | 11/2012 | Cleaver | 160/84.01 |
| D686,433 | S * | 7/2013 | Marocco | D6/575 |
| D701,060 | S * | 3/2014 | Strand | D6/575 |
| 8,905,114 | B1 * | 12/2014 | Whitaker | 160/84.01 |
| 2004/0079492 | A1 * | 4/2004 | Lin | 160/84.01 |
| 2008/0173409 | A1 * | 7/2008 | Robertson et al. | 160/84.01 |
| 2009/0266496 | A1 * | 10/2009 | Dann et al. | 160/84.05 |
| 2010/0186903 | A1 * | 7/2010 | Liang et al. | 160/84.01 |
| 2013/0139977 | A1 * | 6/2013 | Ballard et al. | 160/133 |

* cited by examiner


*Primary Examiner* — Karen S Acker
*Assistant Examiner* — Wendy Arminio

(57) **CLAIM**

The ornamental design for a blind fabric, as shown and described.

**DESCRIPTION**

FIG. **1** is a perspective view of a blind fabric showing my new design;
FIG. **2** is a front elevational view thereof, the rear view being a mirror image;
FIG. **3** is a left side elevational view thereof, the right side being a mirror image;
FIG. **4** is a top elevational view thereof, the bottom view being a mirror image; and,
FIG. **5** is a perspective view of the blind fabric shown retracted and in a position of use.
The broken lines shown in FIG. **5** depict environmental subject matter that forms no part of the claimed design.

**1 Claim, 5 Drawing Sheets**

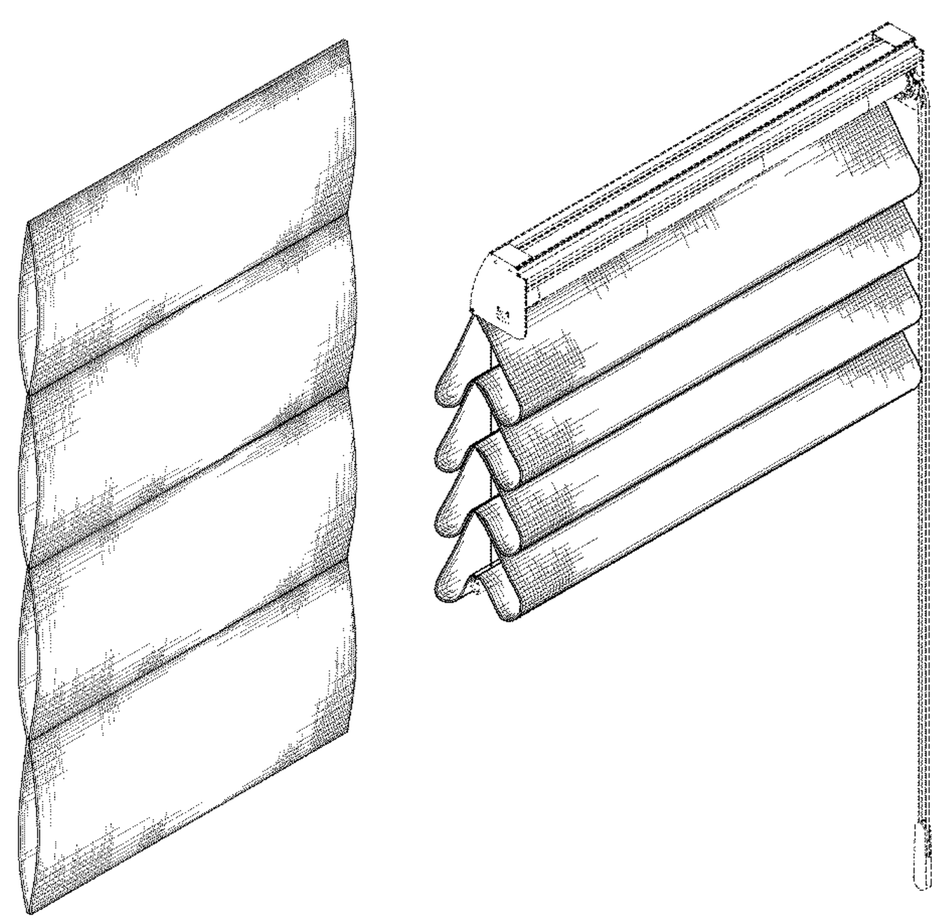

FIG. 1

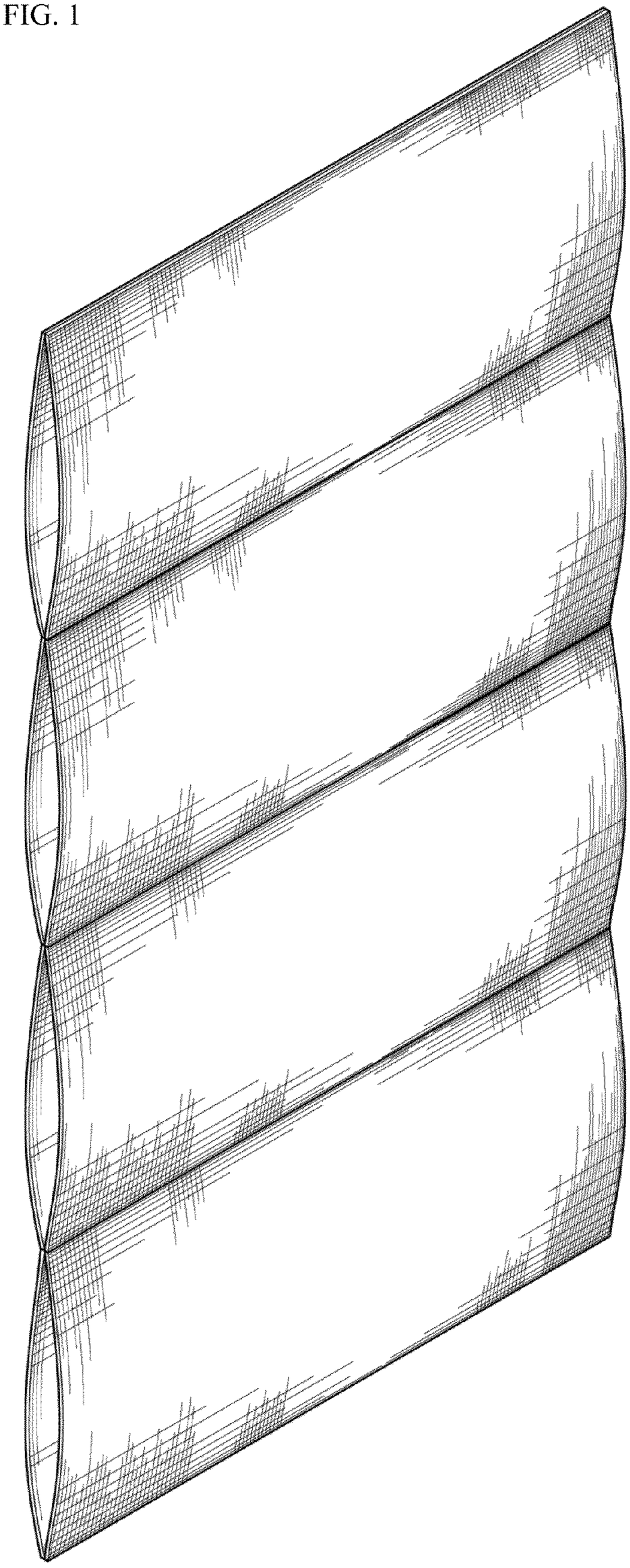

FIG. 2

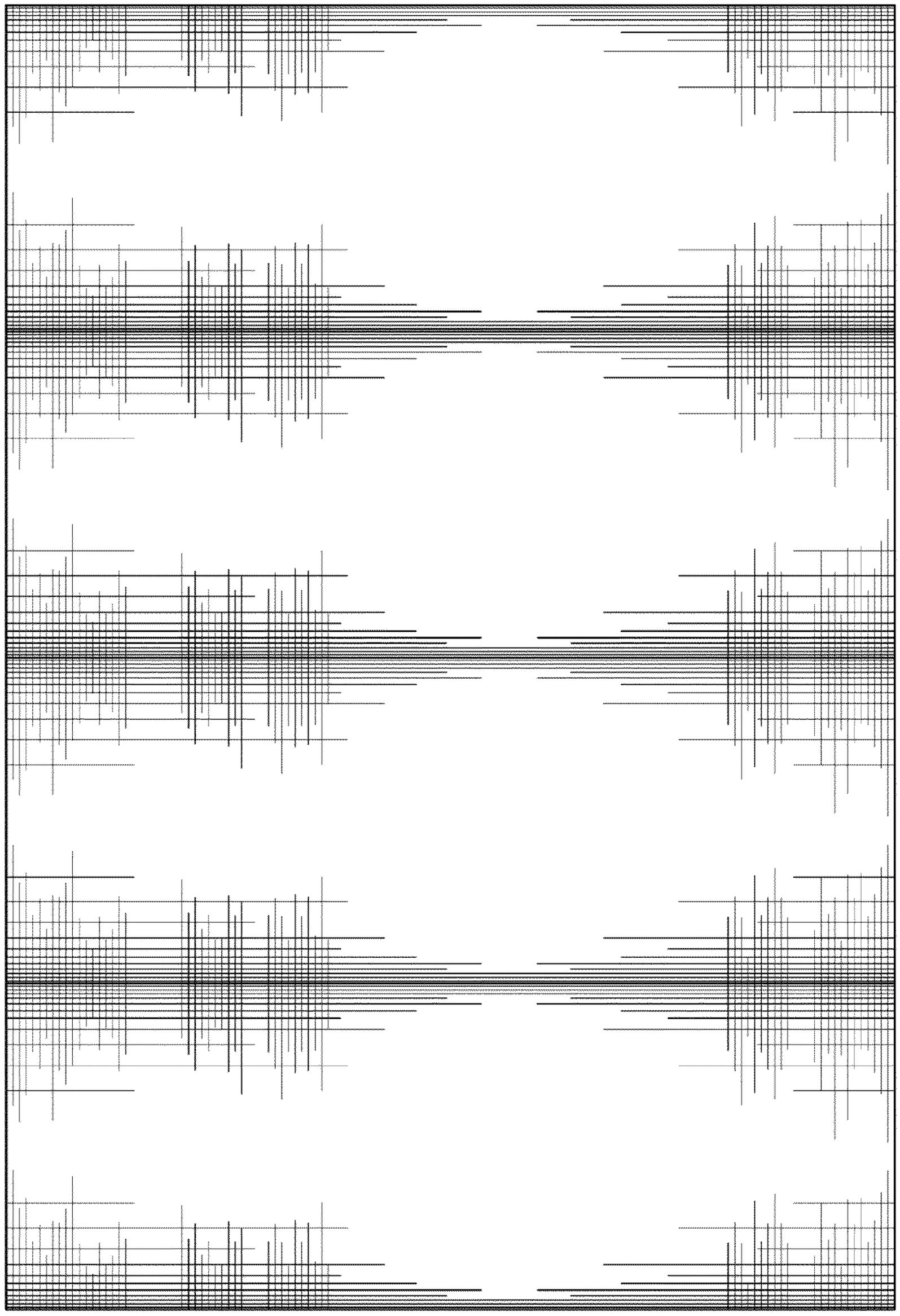

FIG. 3

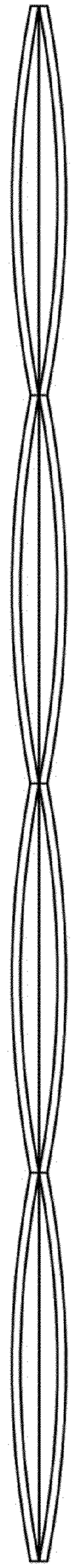

FIG. 4

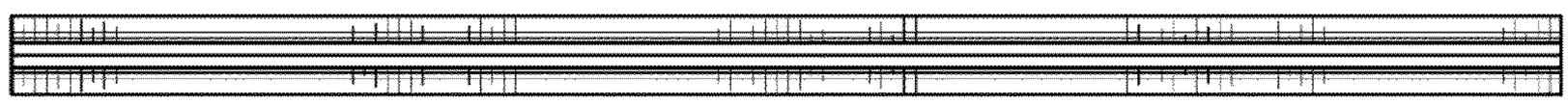
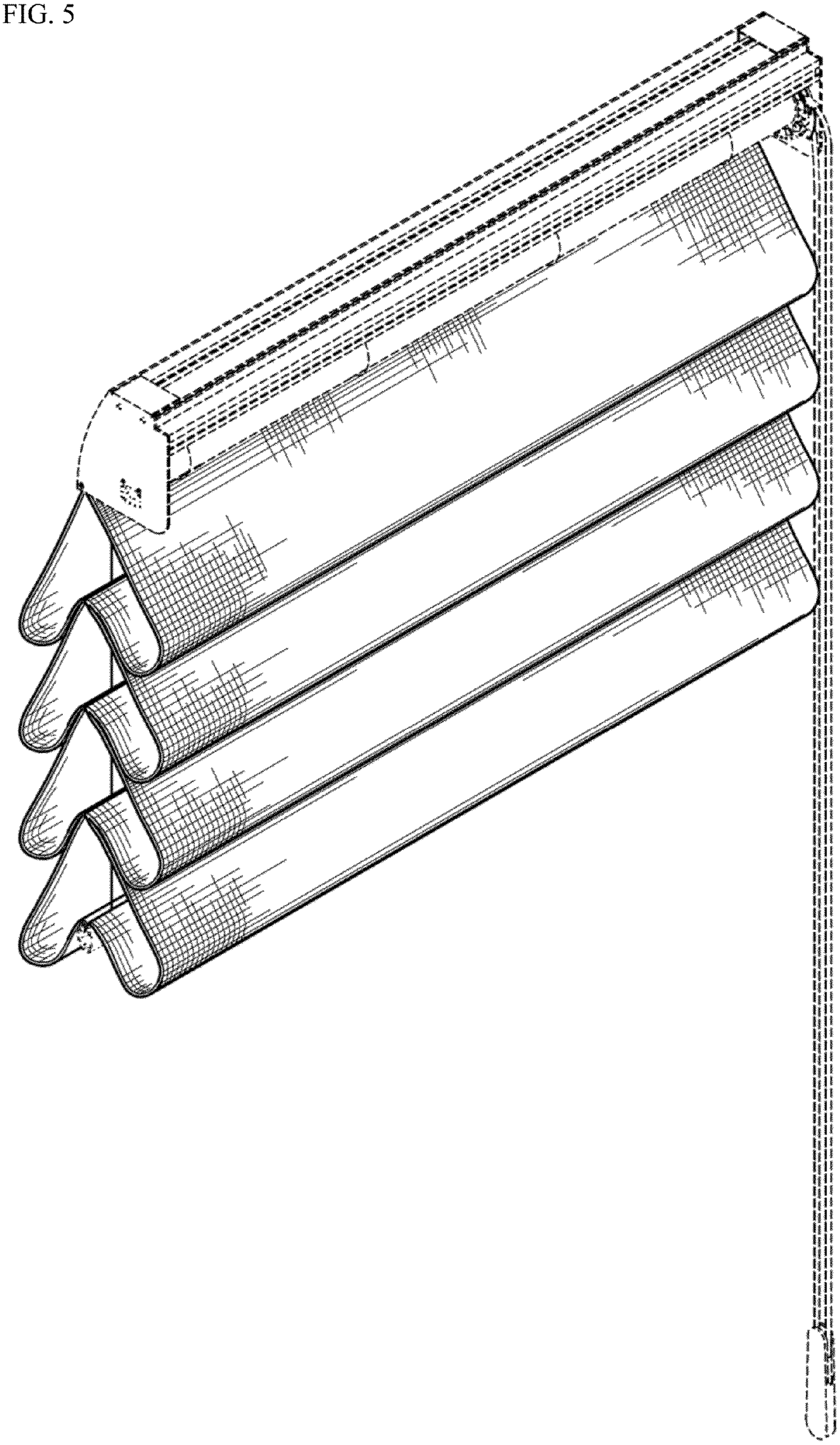
FIG. 5