US00D727493S

(12) United States Design Patent

Biener et al.

(10) Patent No.: US D727,493 S
(45) Date of Patent: ** Apr. 21, 2015

(54) **ACCESSORY FOR MEDICAL CARE**

(75) Inventors: **Achim Biener**, Aufkirchen (DE); **Christian Reisert**, Munich (DE); **Adel Nibu**, Munich (DE); **Christian Backhaus**, Munich (DE); **Roman Stein**, Neuried (DE)

(73) Assignee: **ResMed Limited**, Bella Vista (AU)

(**) Term: **14 Years**

(21) Appl. No.: **29/429,600**

(22) Filed: **Aug. 14, 2012**

(30) **Foreign Application Priority Data**

Feb. 14, 2012 (EM) 1991738-0001
Feb. 14, 2012 (EM) 1991738-0002

(51) **LOC (10) Cl.** **29-02**

(52) **U.S. Cl.**
USPC **D24/110.6**

(58) **Field of Classification Search**
USPC D24/107, 110, 110.1, 110.5, 110.6, 127, D24/129; 128/200.11, 200.14, 200.21, 128/200.24, 200.25, 202.27, 203.12, 128/204.18, 205.24, 205.25, 206.12, 128/206.15, 206.26, 207.12
See application file for complete search history.

(56) **References Cited**

U.S. PATENT DOCUMENTS

D340,976	S	*	11/1993	Garcia	D24/110
5,896,857	A	*	4/1999	Hely et al.	128/205.24
5,937,851	A	*	8/1999	Serowski et al.	128/202.27
6,189,532	B1		2/2001	Hely et al.	
D473,646	S	*	4/2003	Baillargeon et al.	D24/129
D656,604	S	*	3/2012	Eckstein et al.	D24/110
8,316,845	B2	*	11/2012	Tappehorn et al.	128/202.27
D680,214	S	*	4/2013	Eckstein et al.	D24/110
D709,179	S	*	7/2014	Inoue et al.	D24/110

* cited by examiner

Primary Examiner — Deanna L Pratt
Assistant Examiner — Lilyana Bekic
(74) *Attorney, Agent, or Firm* — Nixon & Vanderhye P.C.

(57) **CLAIM**

The ornamental design for an accessory for medical care, as shown.

DESCRIPTION

FIG. **1** is a perspective view of an accessory for medical care according to a first embodiment showing our new ornamental design;
FIG. **2** is a top view thereof;
FIG. **3** is a bottom view thereof;
FIG. **4** is a perspective view of an accessory for medical care according to a second embodiment showing our new ornamental design;
FIG. **5** is a top view thereof;
FIG. **6** is a bottom view thereof;
FIG. **7** is a perspective exploded view thereof;
FIG. **8** is an exploded view thereof as seen from the top; and,
FIG. **9** is an exploded view thereof as seen from the bottom.

1 Claim, 9 Drawing Sheets

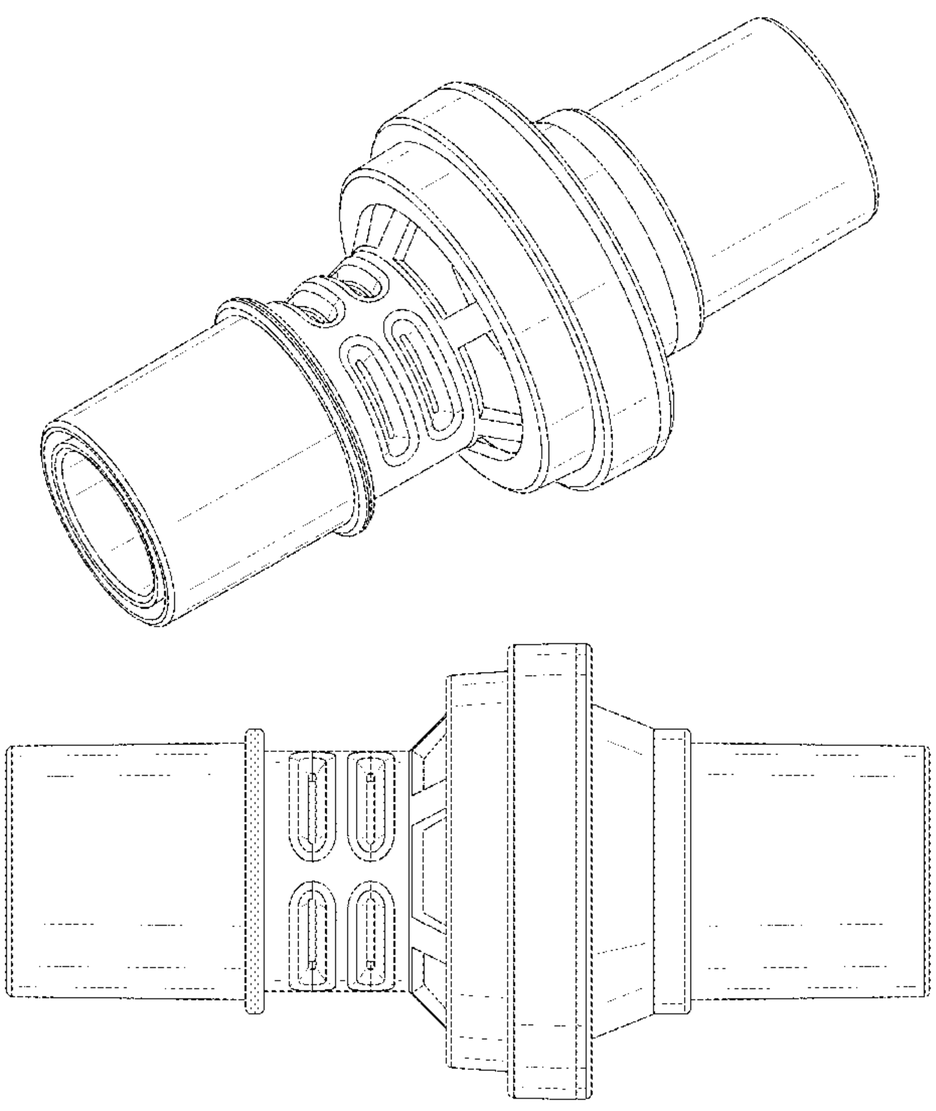

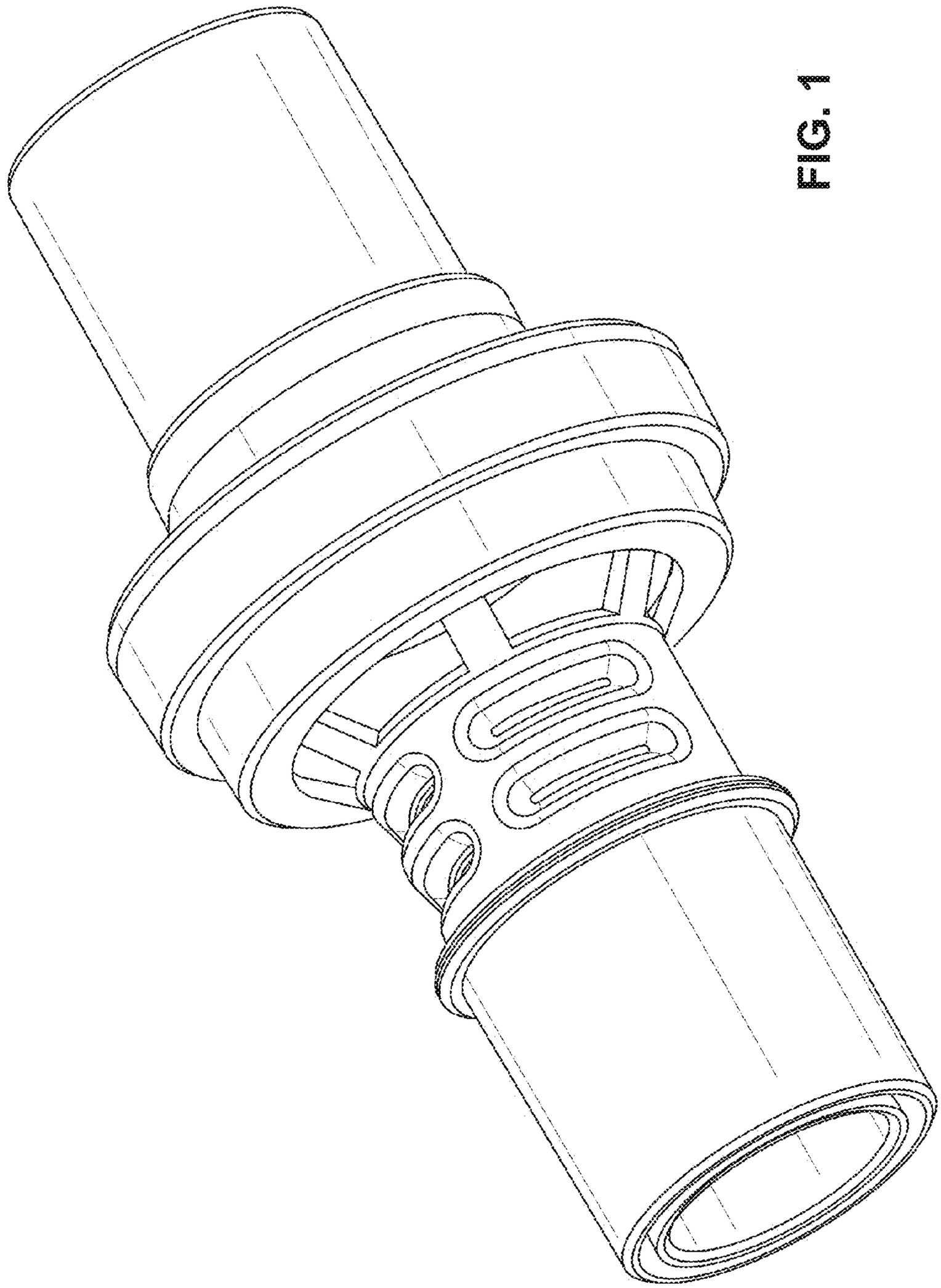

FIG. 1

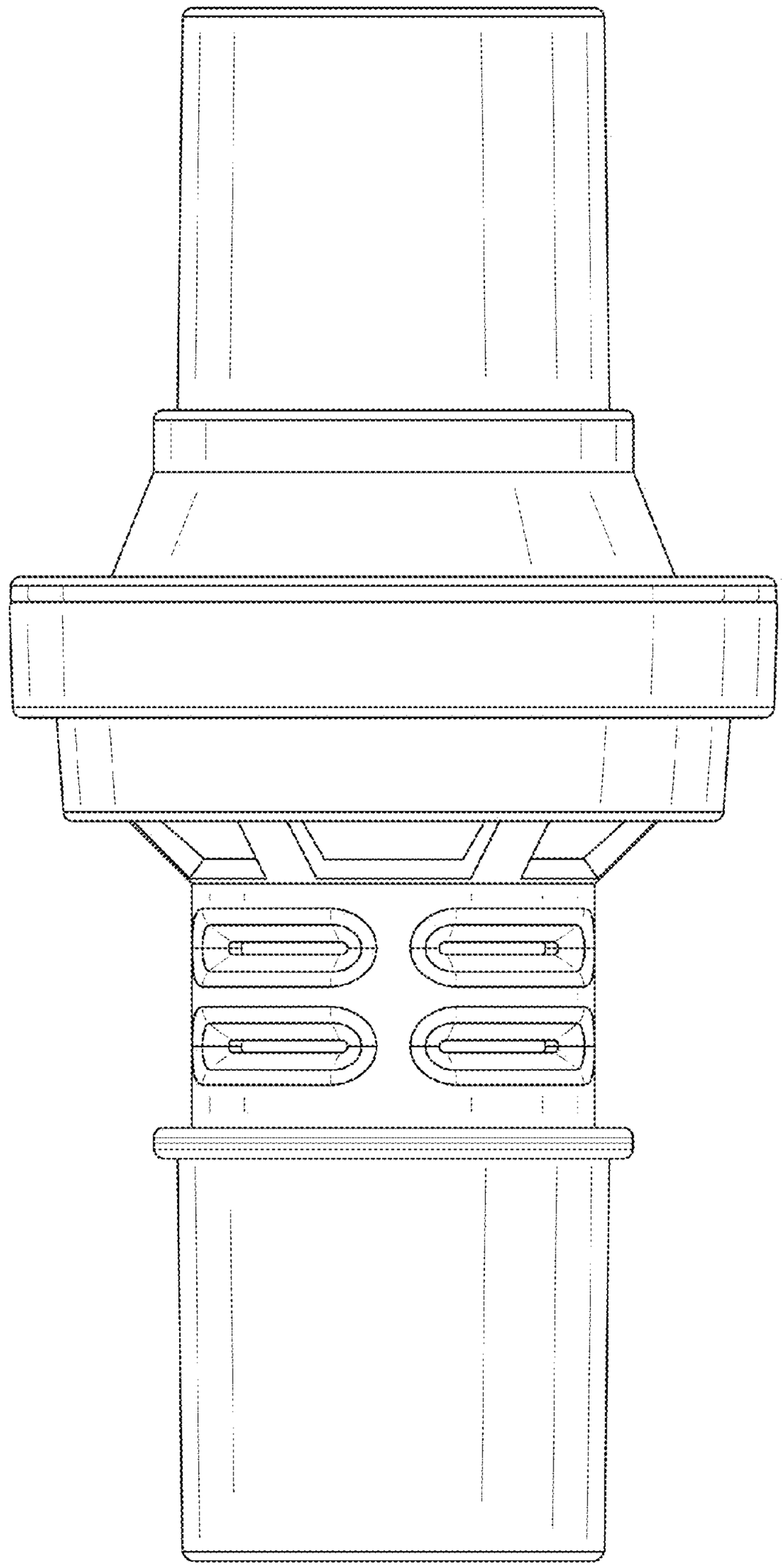

FIG. 2

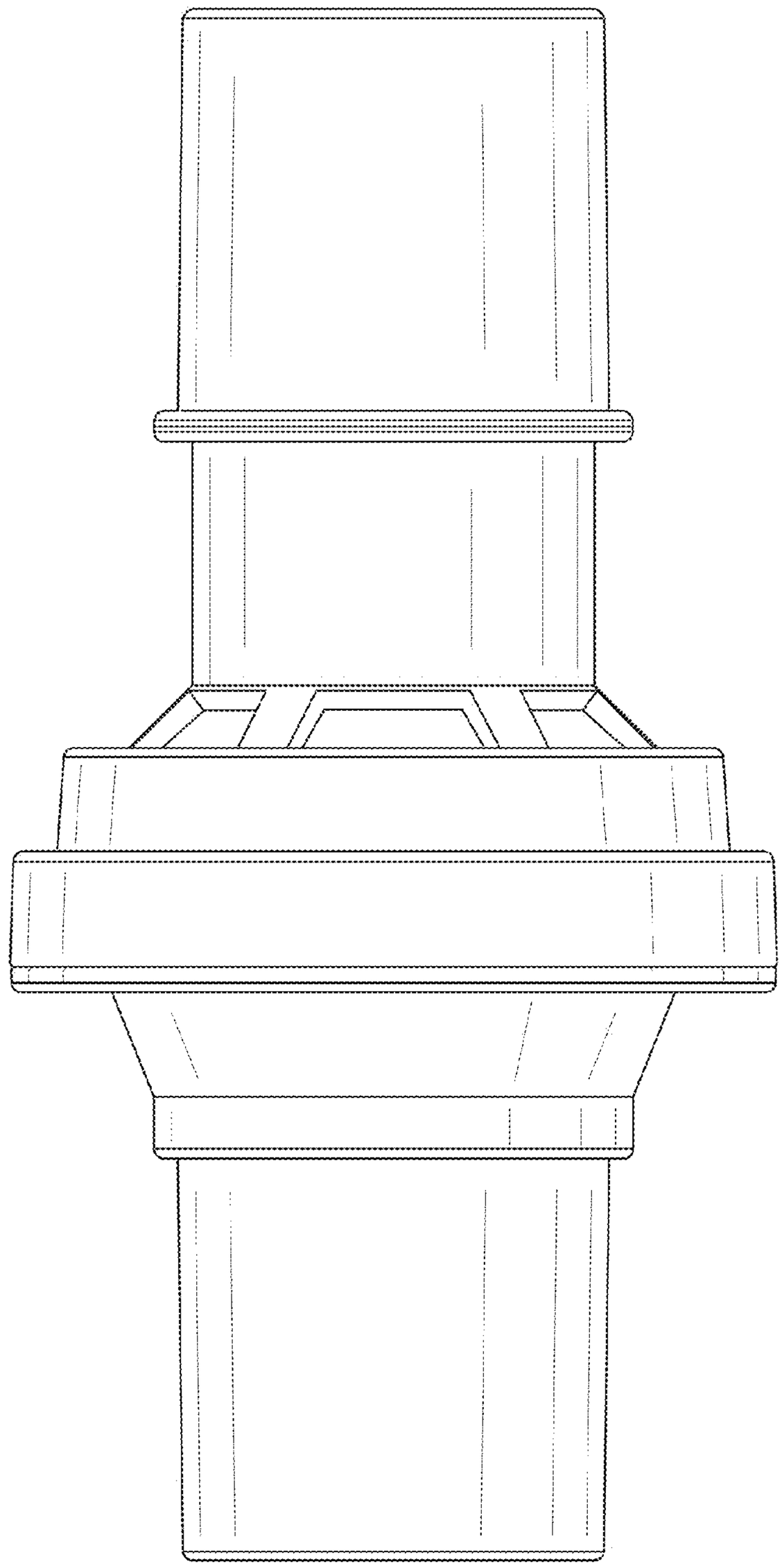

FIG. 3

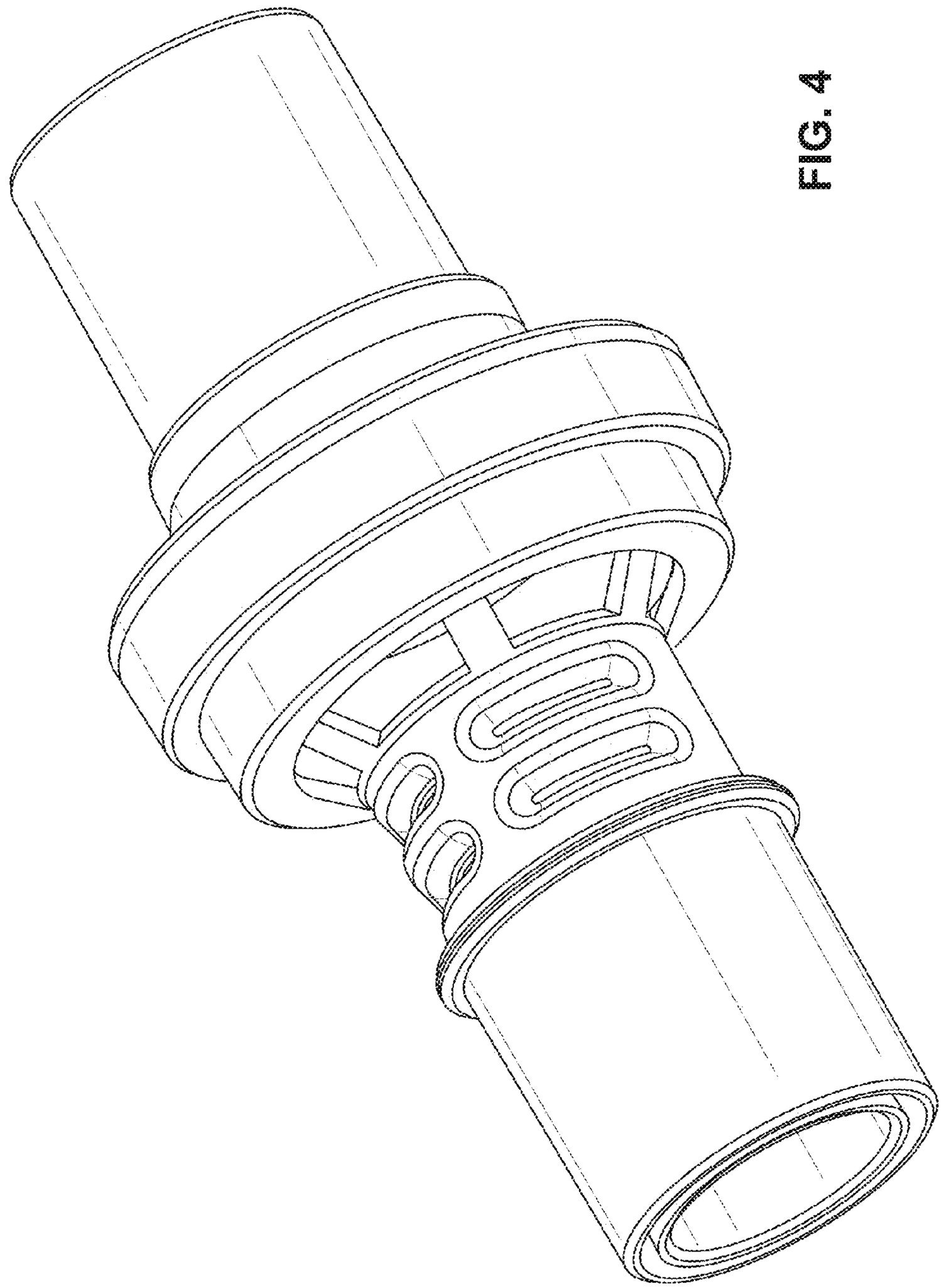

FIG. 4

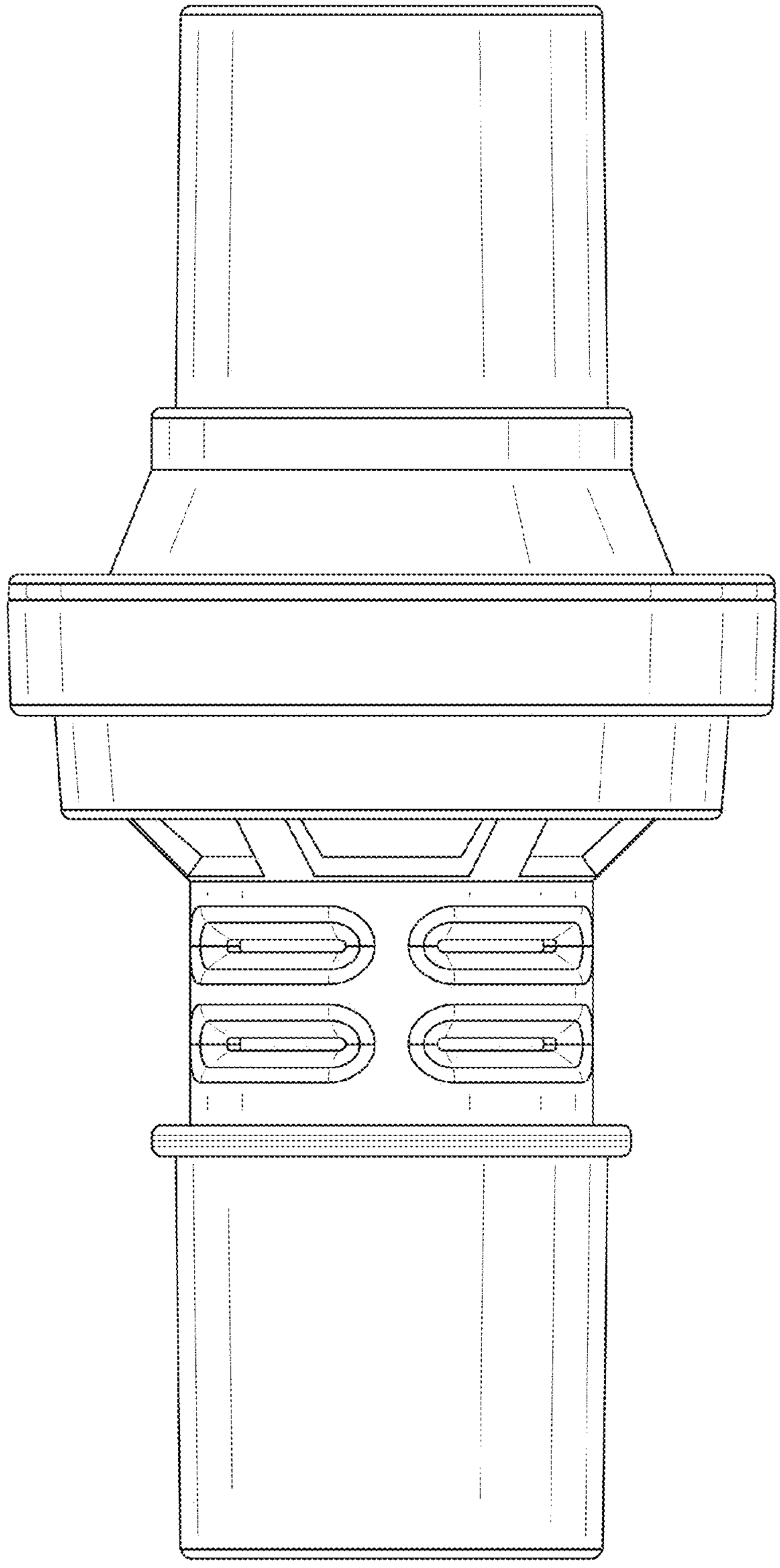

FIG. 5

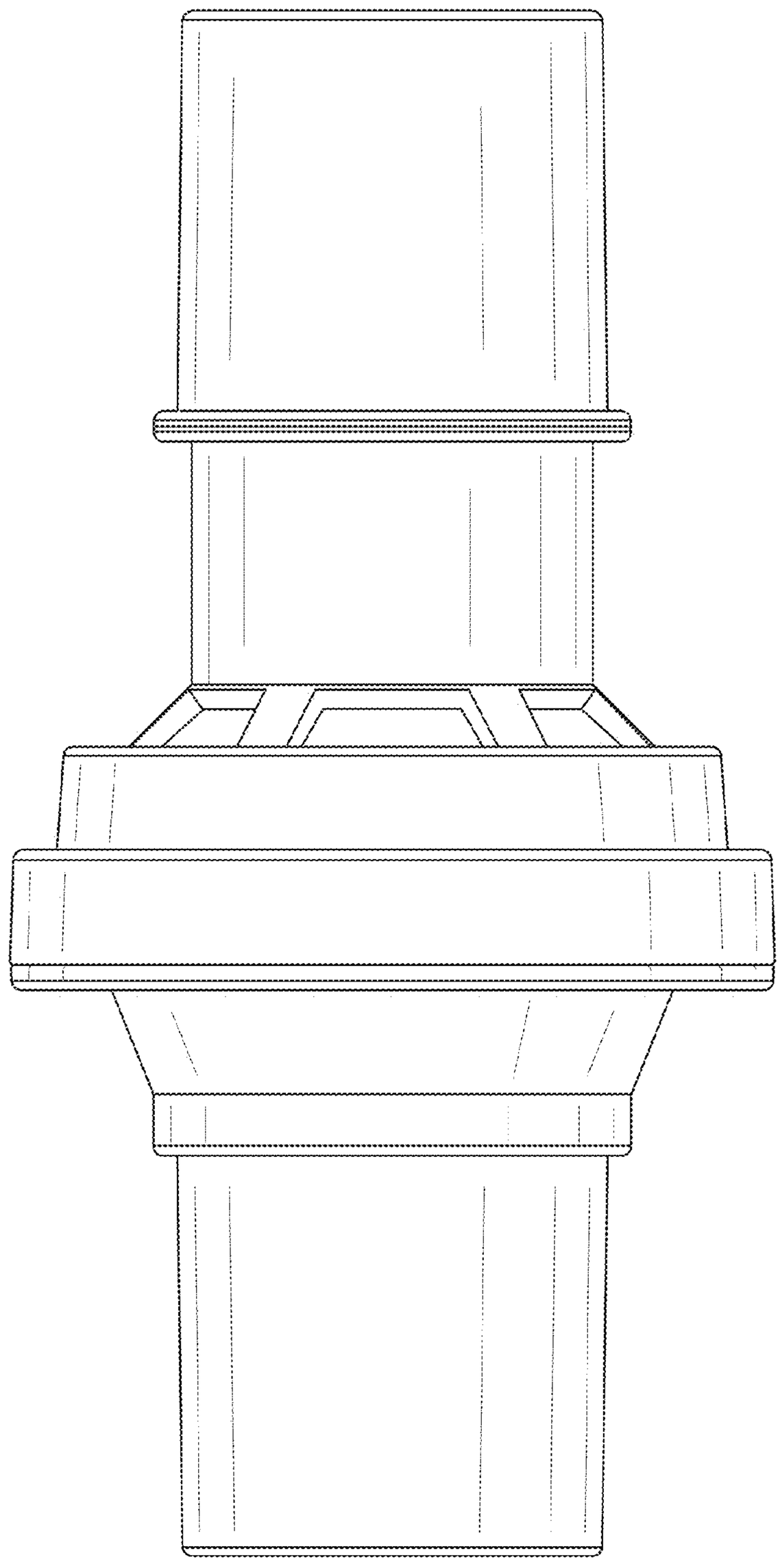

FIG. 6

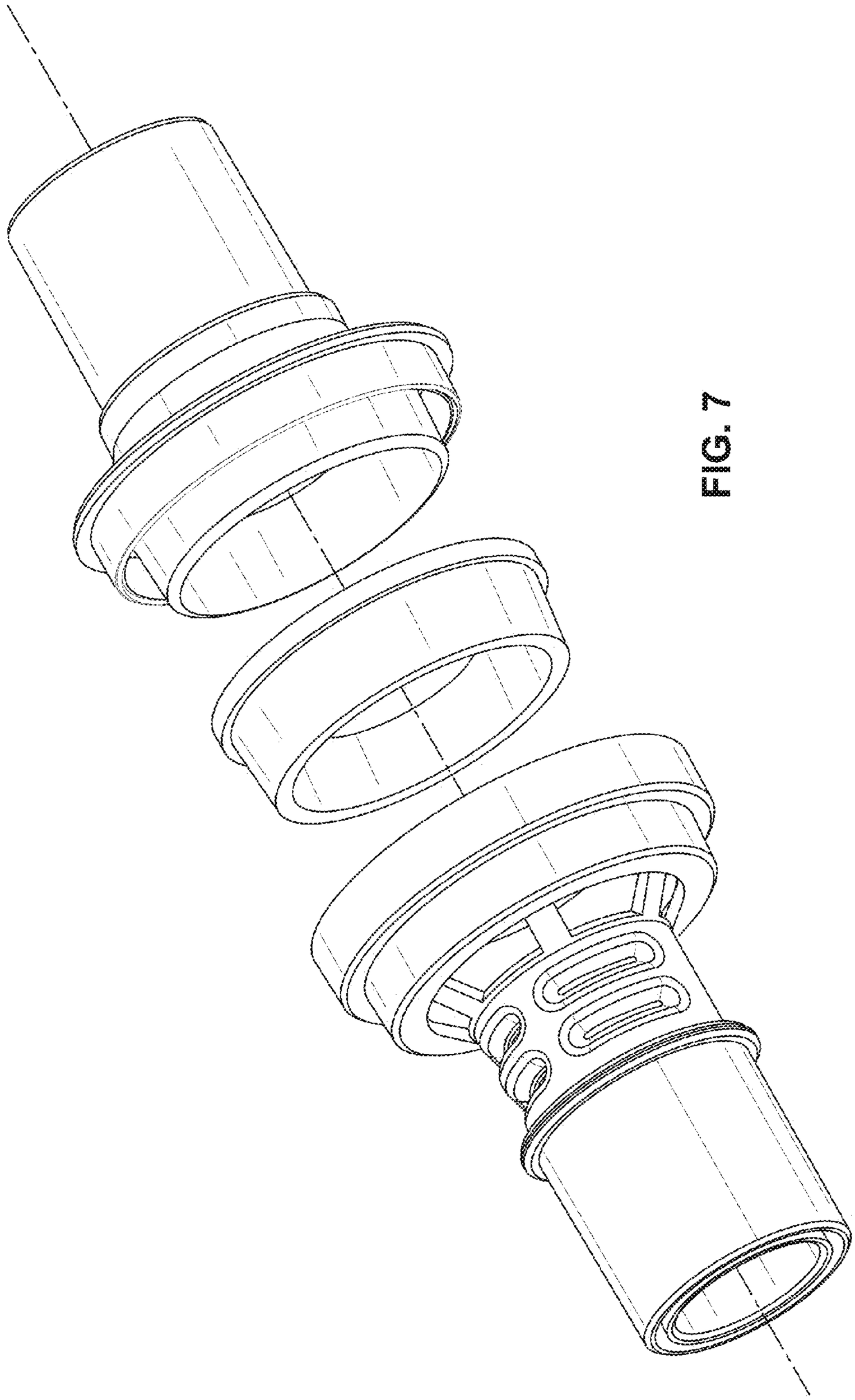

FIG. 7

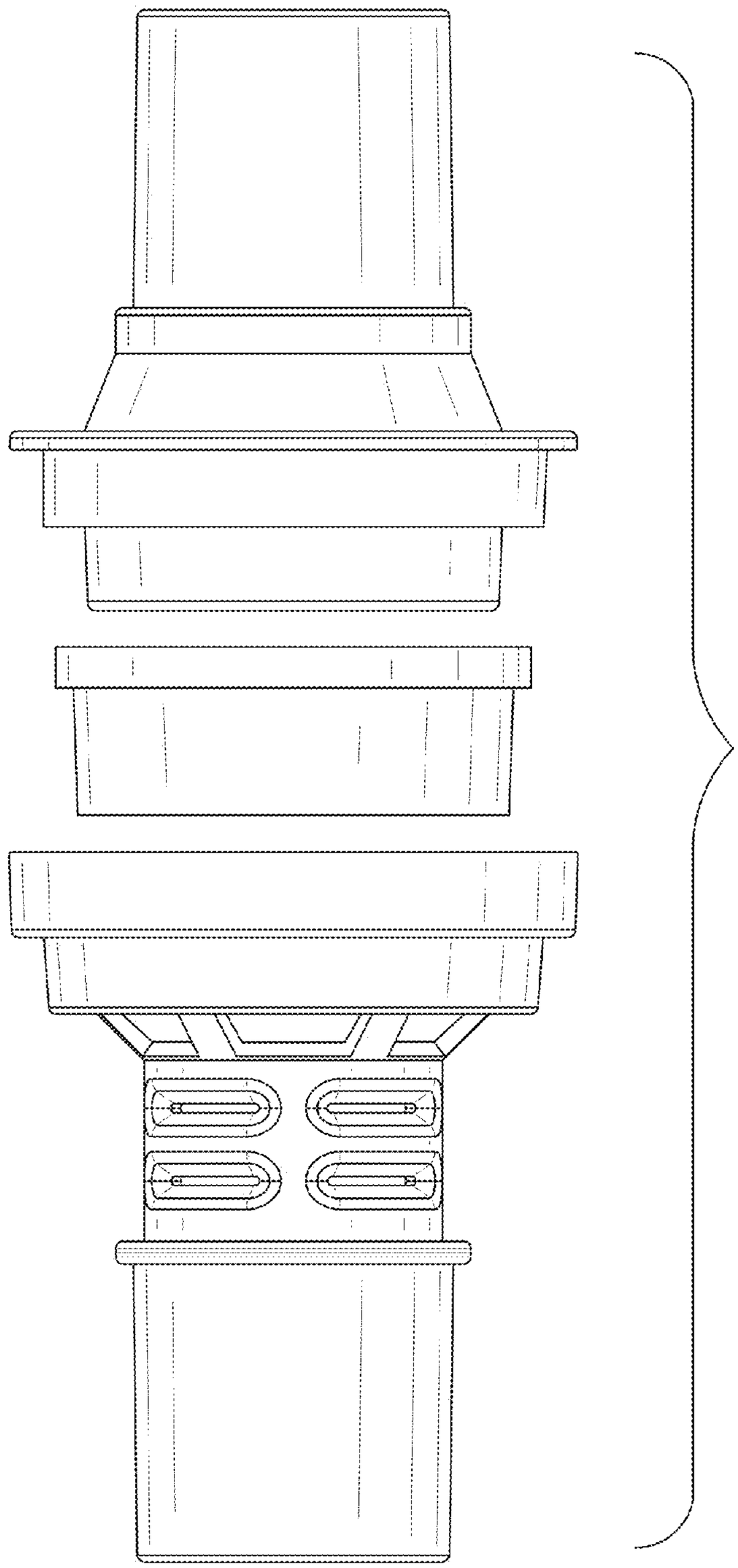

FIG. 8

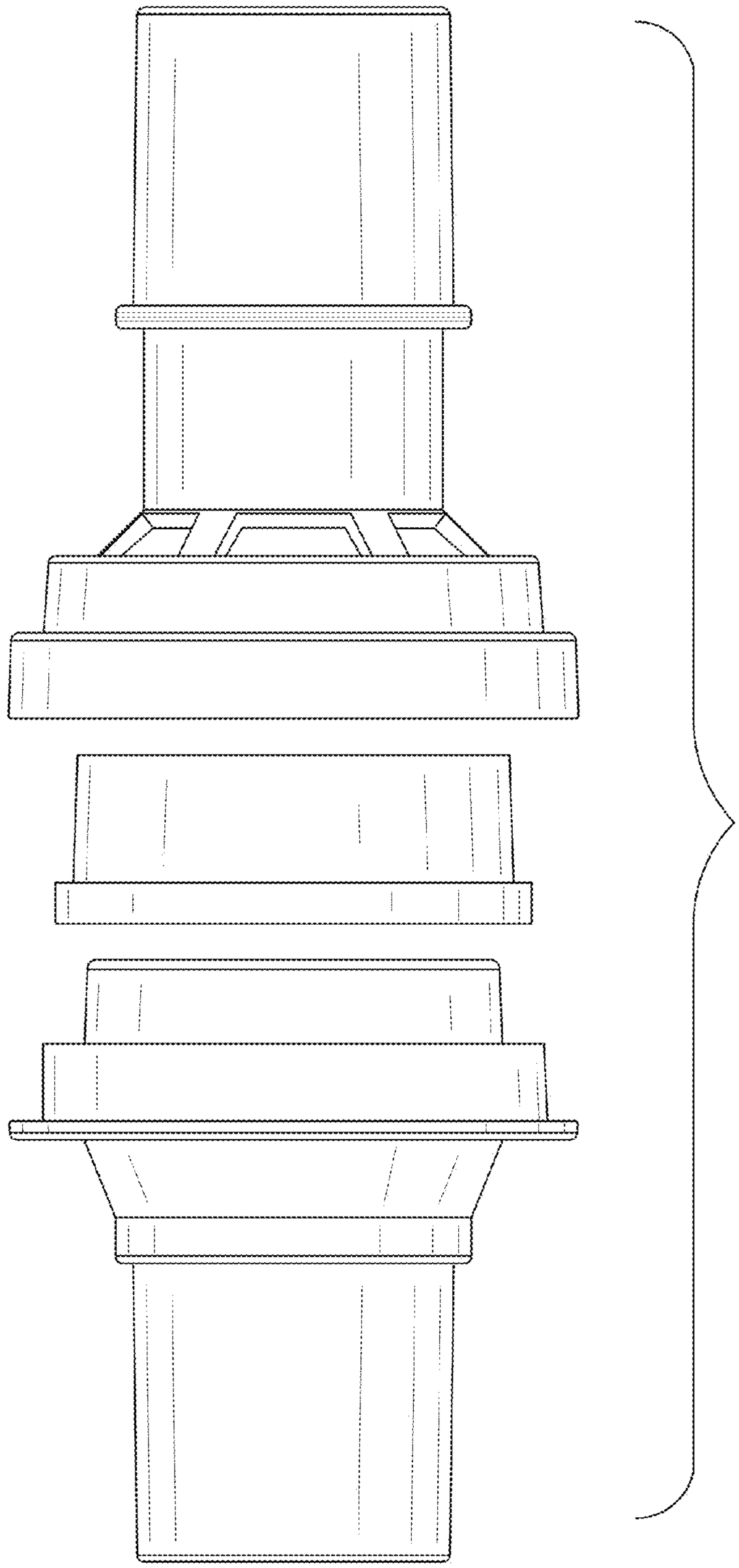

FIG. 9