US00D727127S

(12) United States Design Patent
Schmid

(10) Patent No.: US D727,127 S
(45) Date of Patent: ** Apr. 21, 2015

(54) **HONING TOOL**

(71) Applicant: **KADIA Produktion GmbH + Co.**, Nurtingen (DE)

(72) Inventor: **Jurgen R. Schmid**, Ammerbuch (DE)

(73) Assignee: **KADIA Produktion GmbH + Co.** (DE)

(**) Term: **14 Years**

(21) Appl. No.: **29/451,835**

(22) Filed: **Apr. 9, 2013**

(30) **Foreign Application Priority Data**

Oct. 10, 2012 (DE) 40 2012 004 664

(51) **LOC (10) Cl.** **08-05**

(52) **U.S. Cl.**
USPC **D8/70**; D8/91; D15/140

(58) **Field of Classification Search**
USPC ..... D8/70, 71, 85, 86, 90, 91; D15/139, D15/140; 81/429; 175/320, 324, 393, 415; 279/60–64, 145, 157, 901–902; 299/33; 408/239 R
See application file for complete search history.

(56) **References Cited**

U.S. PATENT DOCUMENTS

1,944,662	A *	1/1934	Kern	451/478
1,991,220	A *	2/1935	Johnson	451/477
2,313,442	A *	3/1943	Kline	451/481
4,075,794	A *	2/1978	Blaylock	451/472

(Continued)

FOREIGN PATENT DOCUMENTS

DE	3642258 A1	6/1988
DE	4210928 C2	10/1993

(Continued)

OTHER PUBLICATIONS

"Honing tool for small two-strokes." SAE International., Sep. 17, 2009 [online], [retrieved on Nov. 23, 2014]. Retrieved from the Internet <URL: http://articles.sae.org/6927/>.*

(Continued)

Primary Examiner — Philip S Hyder
Assistant Examiner — Darlington Ly
(74) *Attorney, Agent, or Firm* — Akerman LLP

(57) **CLAIM**

The ornamental design for a honing tool, as shown and described.

DESCRIPTION

FIG. **1** is a top, rear, and left-side perspective view of a first embodiment of the honing tool;
FIG. **2** is a right-side elevation view thereof;
FIG. **3** is a left-side elevation view thereof;
FIG. **4** is a bottom plan view;
FIG. **5** is a top plan view;
FIG. **6** is a rear elevation view; and
FIG. **7** is a front elevation view thereof.
FIG. **8** is a top, rear, and left-side perspective view of a second embodiment of the honing tool;
FIG. **9** is a right-side elevation view thereof;
FIG. **10** is a left-side elevation view thereof;
FIG. **11** is a bottom plan view thereof;
FIG. **12** is a top plan view thereof;
FIG. **13** is a rear elevation view thereof; and,
FIG. **14** is a front elevation view thereof.

The second embodiment of the honing tool shown FIGS. **8-14** differs from the first embodiment shown in FIGS. **1-7** only in that the middle part of the honing tool is made of a different material than the rest of the tool, whereas in the first embodiment the tool is made of one material. All other surfaces are the same in both embodiments.

The broken lines shown in the drawings illustrate portions of the honing tool that forms no part of the claimed design.

1 Claim, 12 Drawing Sheets

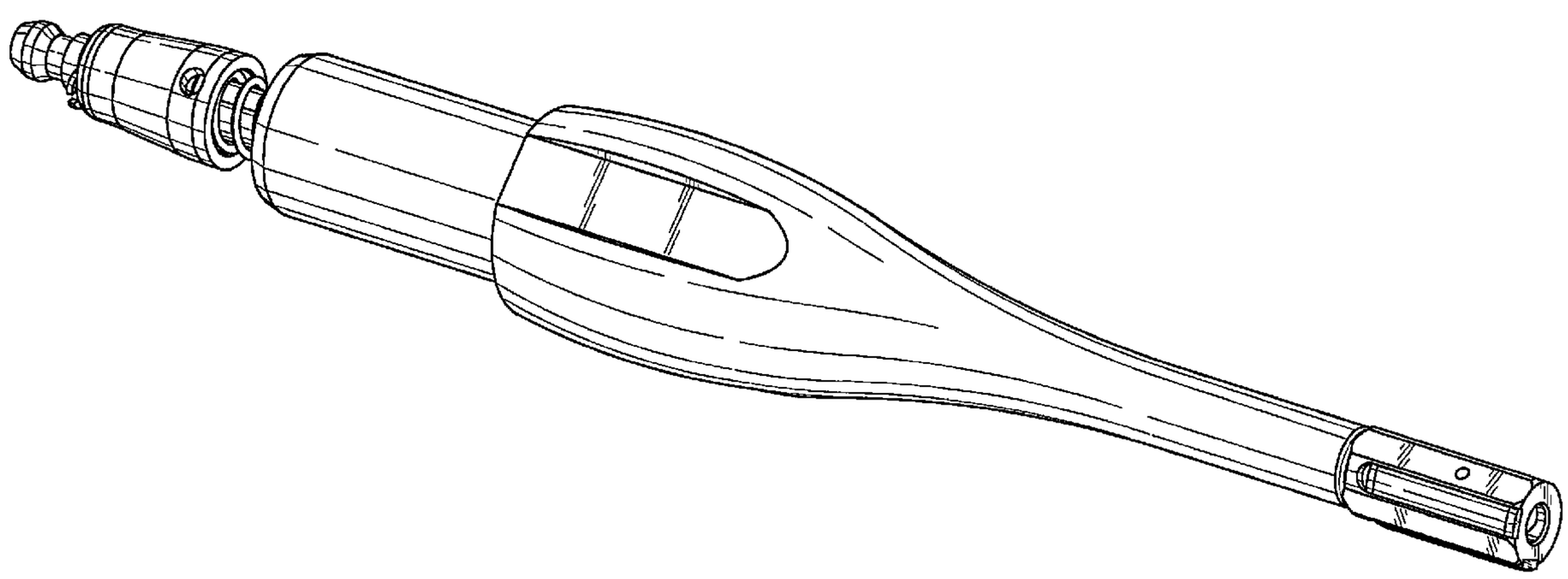

(56) **References Cited**

U.S. PATENT DOCUMENTS

D250,452	S	*	12/1978	Heischman	D8/91
D329,795	S	*	9/1992	Bird et al.	D8/70
5,390,448	A	*	2/1995	Schimweg	451/478
D457,046	S	*	5/2002	Boyle et al.	D8/70
D540,644	S	*	4/2007	Song	D8/70
D589,319	S	*	3/2009	Peters	D8/70
D609,073	S	*	2/2010	Lin	D8/70
2003/0194957	A1	*	10/2003	Schulz et al.	451/180
2014/0113535	A1	*	4/2014	Baumgartner et al.	451/540

FOREIGN PATENT DOCUMENTS

DE	102006007704	A1	8/2007
DE	202009007230	U1	10/2010

OTHER PUBLICATIONS

"Honing tools with Honing sleeves." PWG Diamond Tools for honing and deburring., Mar. 18, 2011 [online], [retrieved on Nov. 23, 2014]. Retrieved from the Internet <URL: http://www.pwg-leutkirch.de/en/index.php?pg=huelsen-und-honwerkzeuge.php>.*

"Honen in Highspeed", Degen Maschinenbau GmbH, AMB-Fair, Sep. 18-22, 2012, Stuttgart, Germany.

* cited by examiner

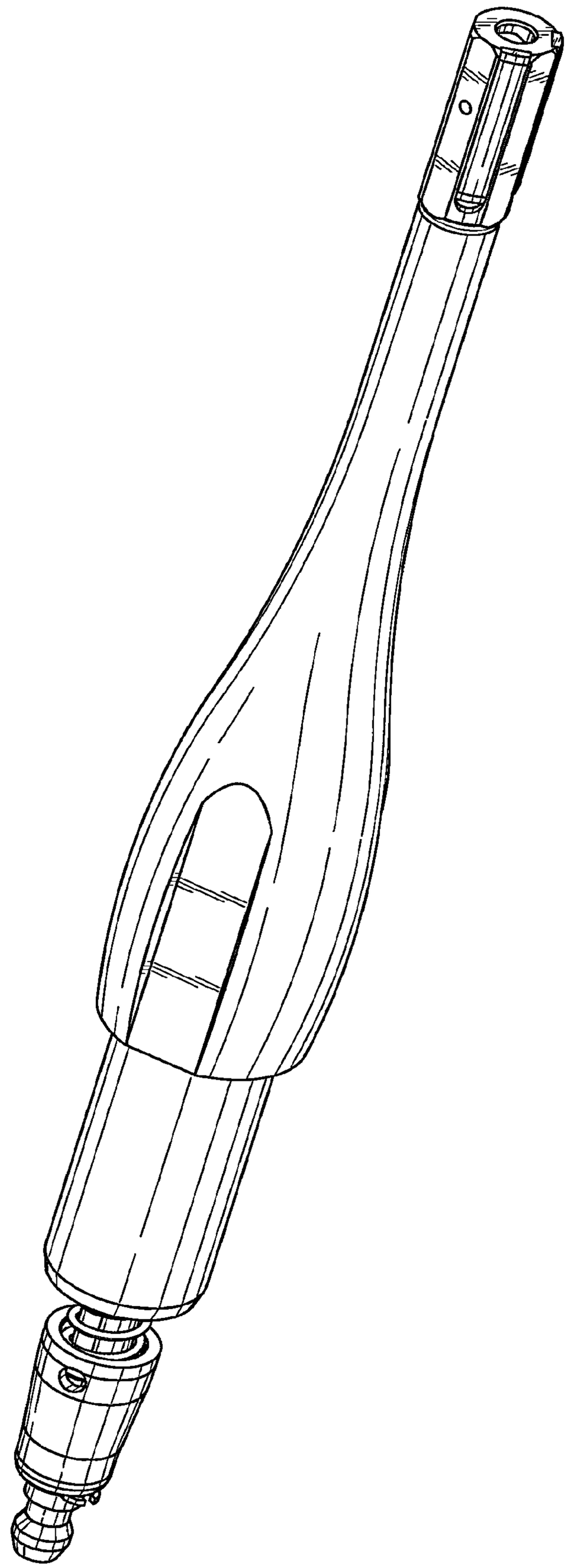

FIG. 1

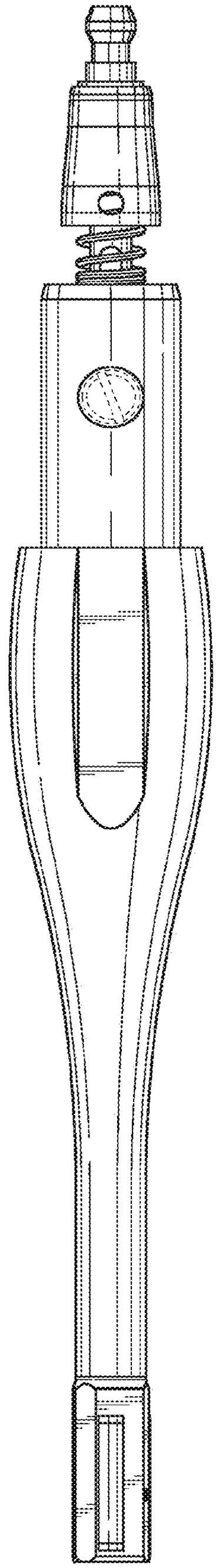

FIG. 2

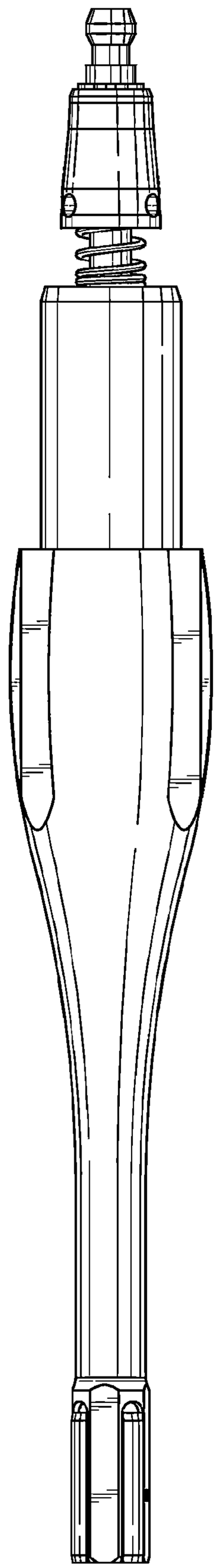

FIG. 3

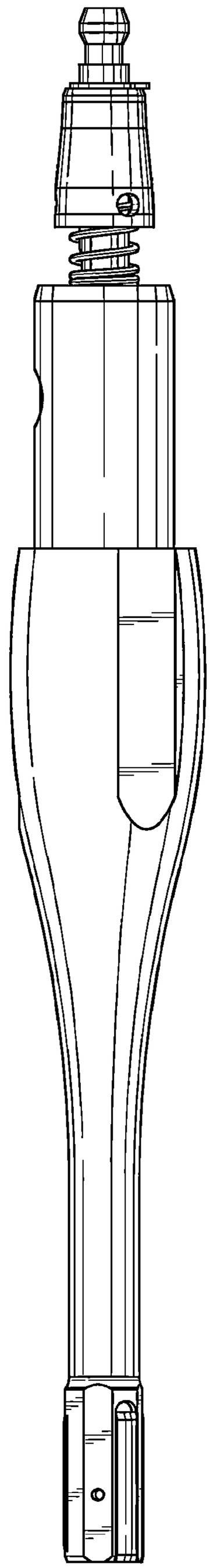

FIG. 4

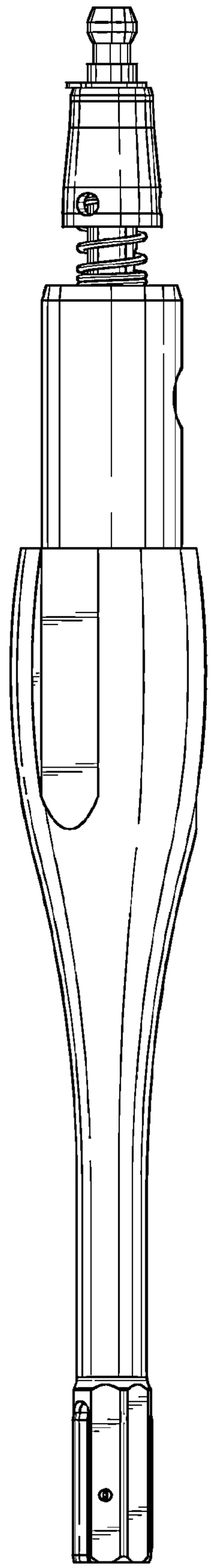

FIG. 5

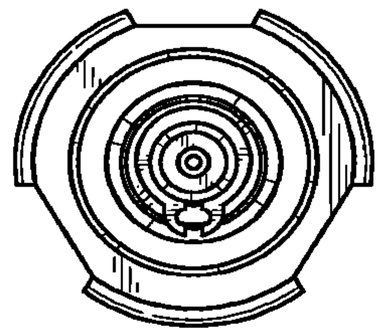

FIG. 7

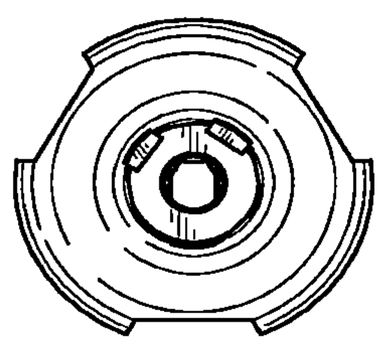

FIG. 6

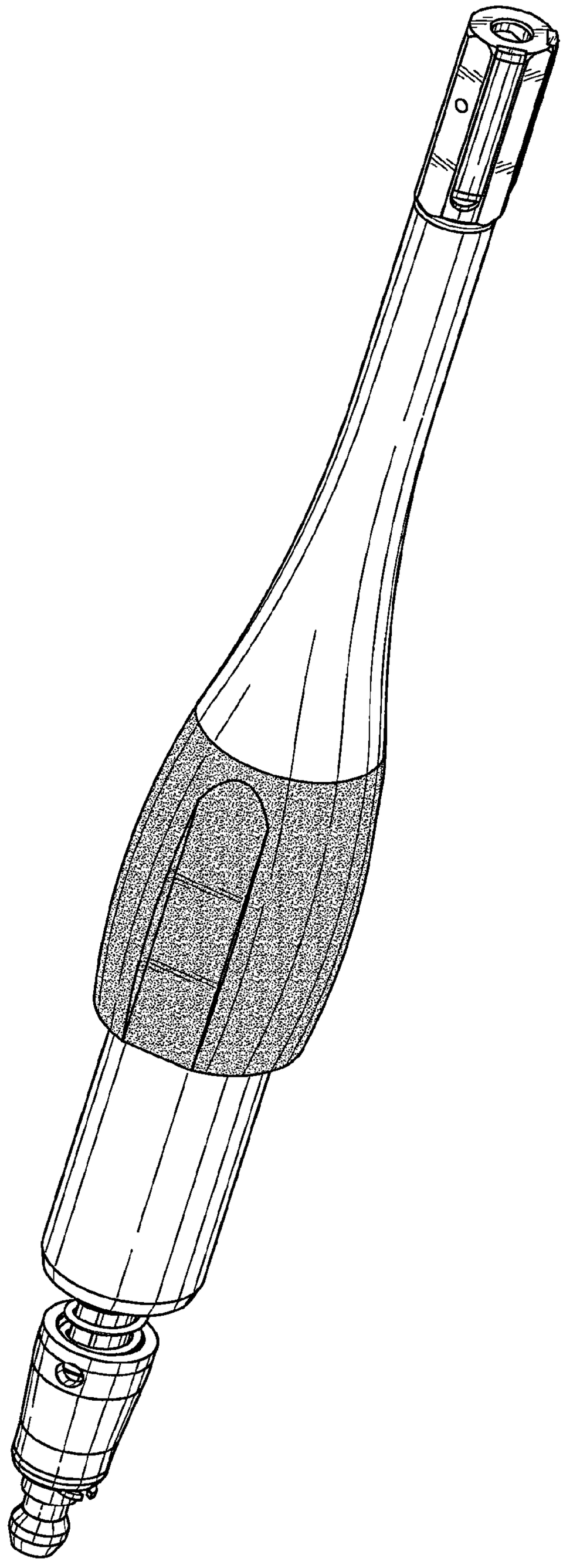

FIG. 8

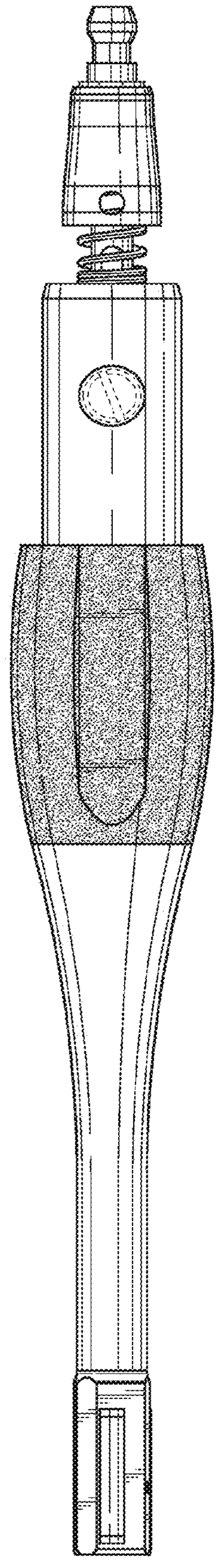

FIG. 9

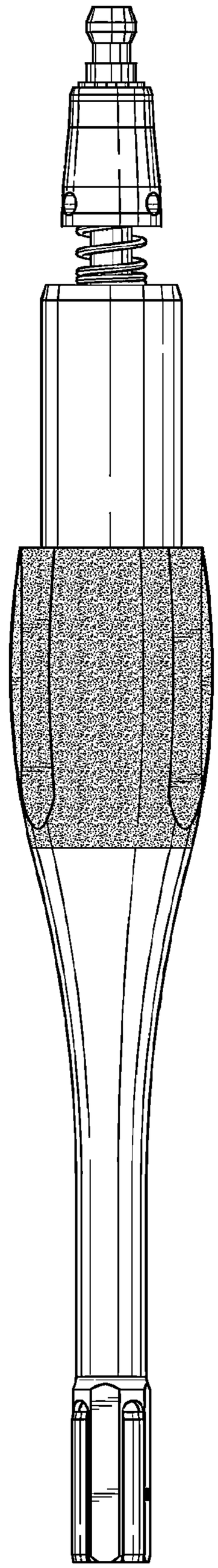

FIG. 10

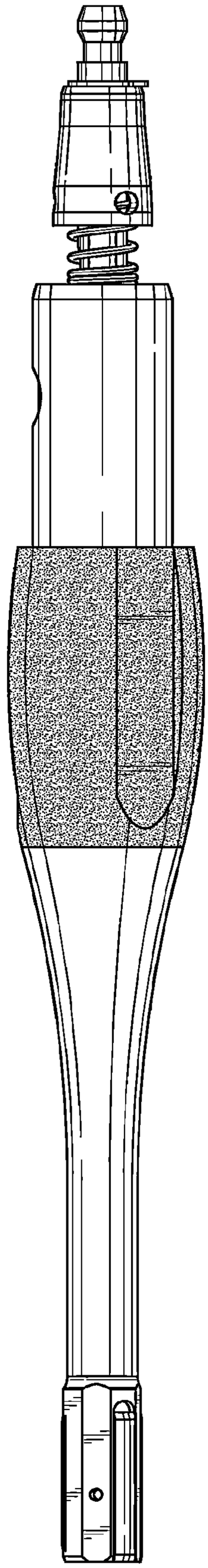

FIG. 11

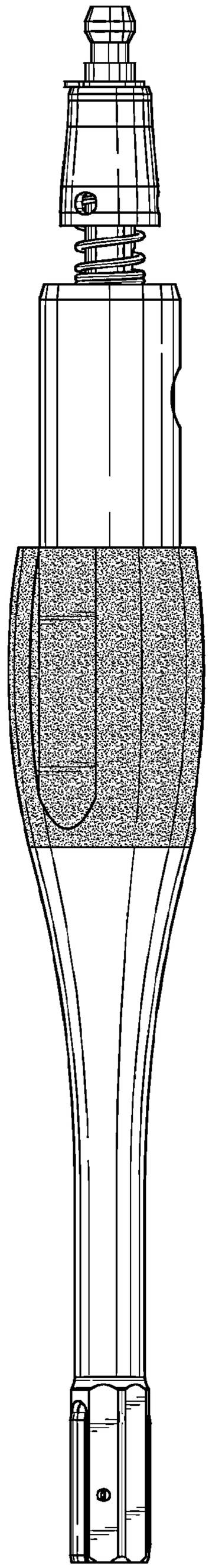

FIG. 12

FIG. 14

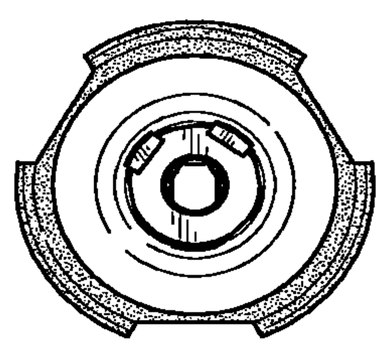

FIG. 13