US00D725755S

(12) United States Design Patent

Jones

(10) Patent No.: US D725,755 S
(45) Date of Patent: ** Mar. 31, 2015

(54) **BATHTUB TRAY**

(71) Applicant: **JRJR Jones Products LLC**, Richmond, VA (US)

(72) Inventor: **Joy Bechtold Jones**, Richmond, VA (US)

(73) Assignee: **JRJR Jones Products LLC**, Richmond, VA (US)

(**) Term: **14 Years**

(21) Appl. No.: **29/512,310**

(22) Filed: **Dec. 18, 2014**

Related U.S. Application Data

(62) Division of application No. 29/482,706, filed on Feb. 21, 2014.

(51) **LOC (10) Cl.** **23-02**

(52) **U.S. Cl.**
USPC **D23/304**

(58) **Field of Classification Search**
USPC ..... D23/270, 277–279, 303–304, 307; 4/553, 580, 584, 654–655, DIG. 18; D32/56, 74
See application file for complete search history.

(56) **References Cited**

U.S. PATENT DOCUMENTS

2,651,924	A	*	9/1953	Lawrence	D32/74
3,444,564	A	*	5/1969	Lavacchia	4/559
4,369,532	A	*	1/1983	Houchins et al.	4/619
D288,374	S	*	2/1987	Ikeda	D32/56
D288,375	S	*	2/1987	Okami	D32/56
4,878,257	A	*	11/1989	Hardin	4/658
D325,249	S	*	4/1992	Kliebert	D23/308
D329,280	S	*	9/1992	Draucek, Sr.	D23/308
D338,685	S	*	8/1993	Dakich	D32/74
5,701,615	A	*	12/1997	Baker	4/559
D420,851	S	*	2/2000	Wagner et al.	D7/407
6,701,543	B1		3/2004	Haq	
D513,065	S	*	12/2005	Luong	D23/307
7,578,399	B1	*	8/2009	Mulaw	211/10
7,810,180	B2	*	10/2010	List	4/572.1
8,214,939	B2	*	7/2012	Spurlock	4/654
D674,569	S	*	1/2013	Schelling	D32/74
D679,232	S	*	4/2013	Thomas	D23/307
2011/0258768	A1		10/2011	Spingola	

* cited by examiner

Primary Examiner — Robert Delehanty
(74) *Attorney, Agent, or Firm* — Brian J. Teague

(57) **CLAIM**

I claim the ornamental design for a bathtub tray, as shown and described.

DESCRIPTION

FIG. **1** is a perspective view from the top and front of a bathtub tray showing the new design;
FIG. **2** is a perspective view thereof from the top and rear;
FIG. **3** is a top view thereof;
FIG. **4** is a bottom view thereof;
FIG. **5** is a left side view thereof;
FIG. **6** is a right side view thereof;
FIG. **7** is a front view thereof; and,
FIG. **8** is a rear view thereof.

In the drawings, the broken lines shown in the figures depict unclaimed subject matter and/or environmental structure, and form no part of the claimed design.

1 Claim, 6 Drawing Sheets

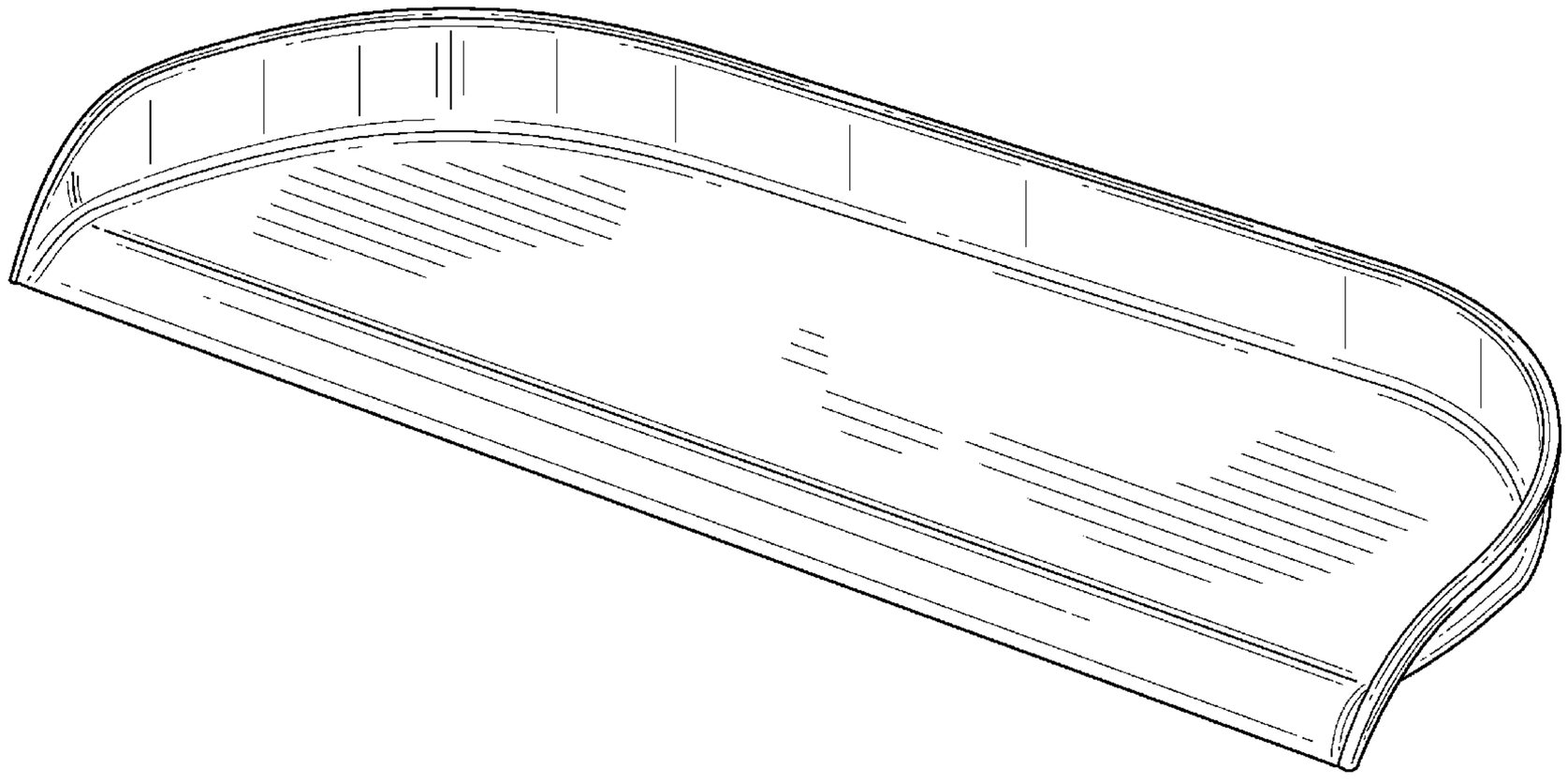

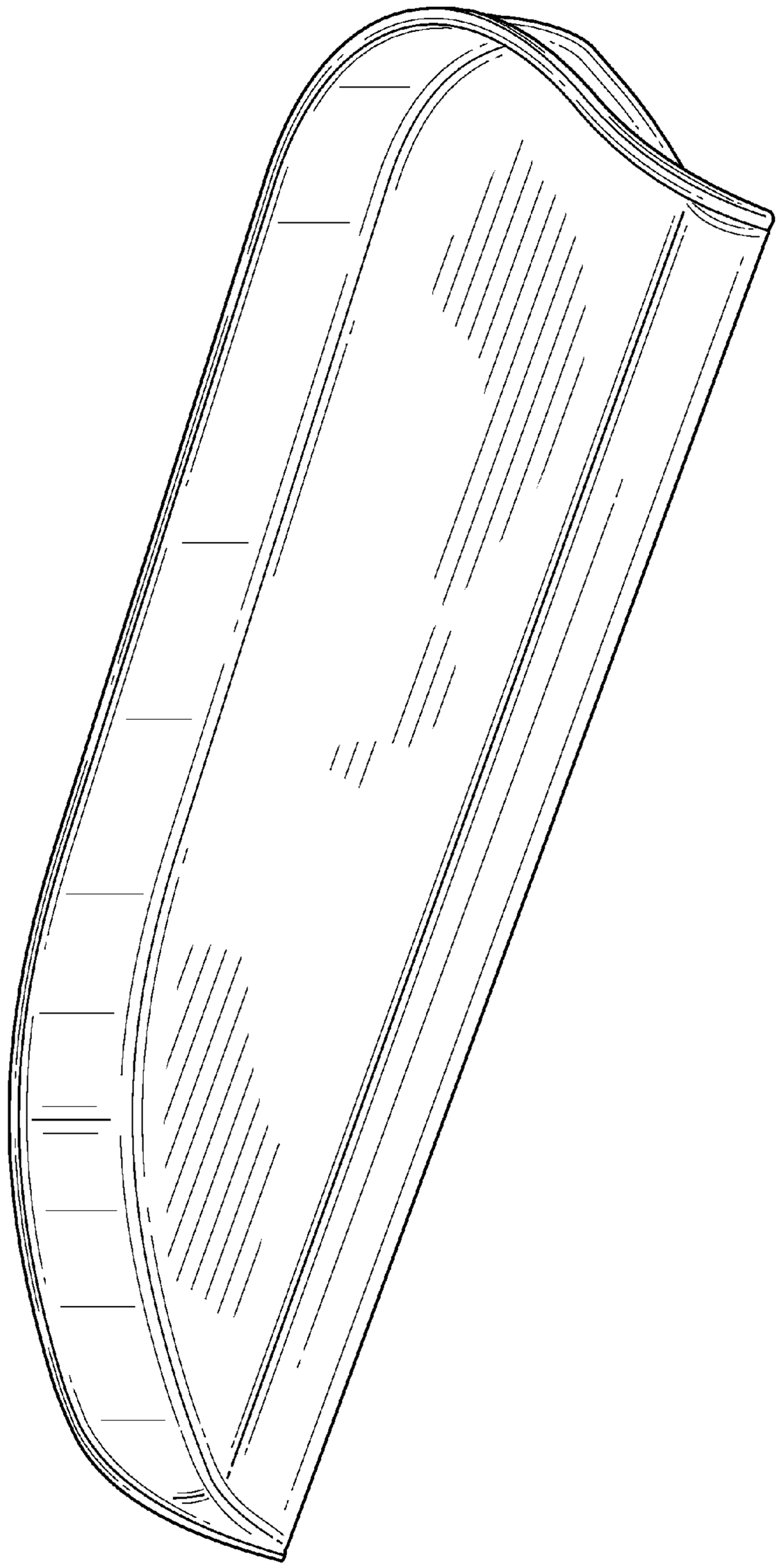

FIG. 1

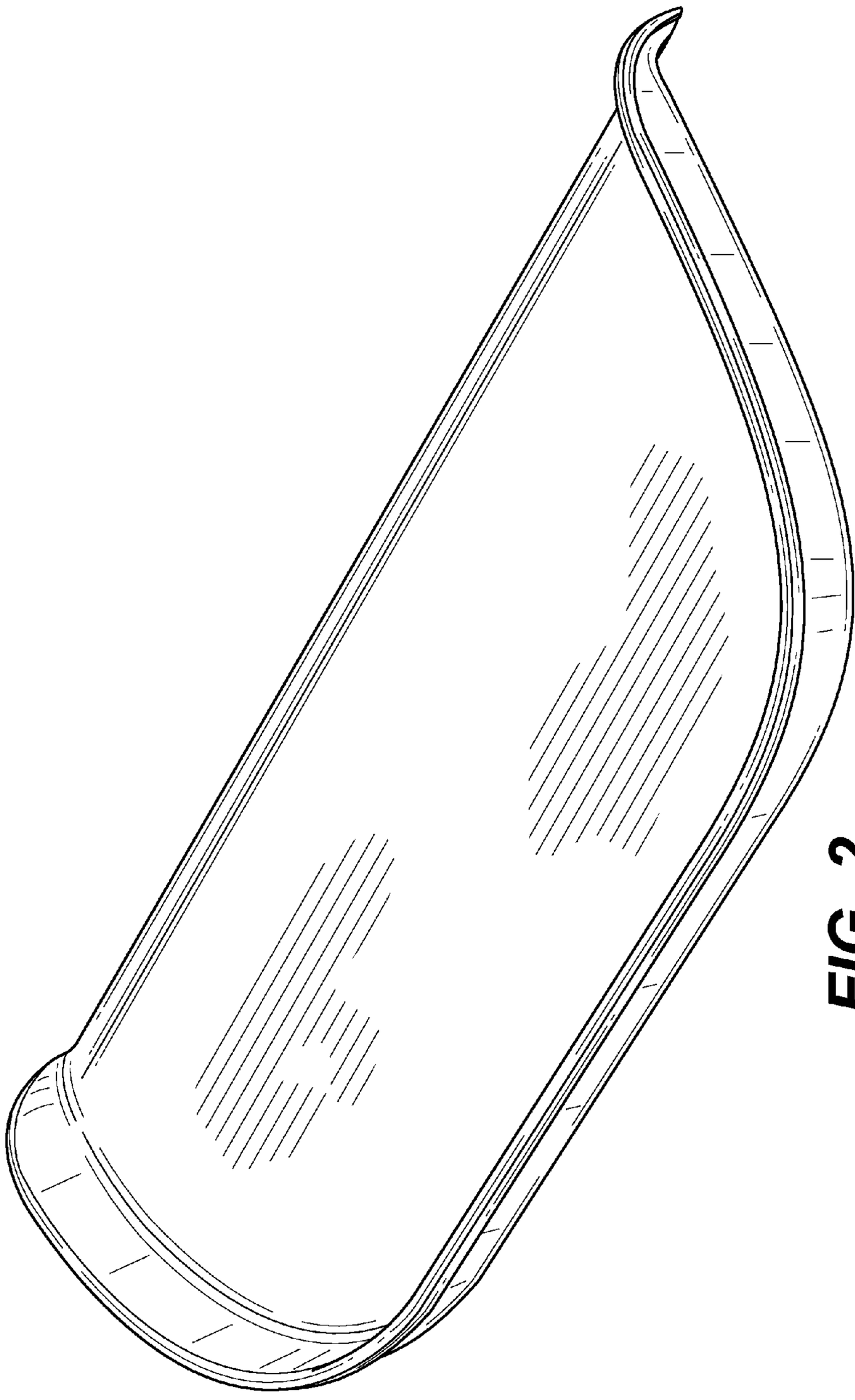

FIG. 2

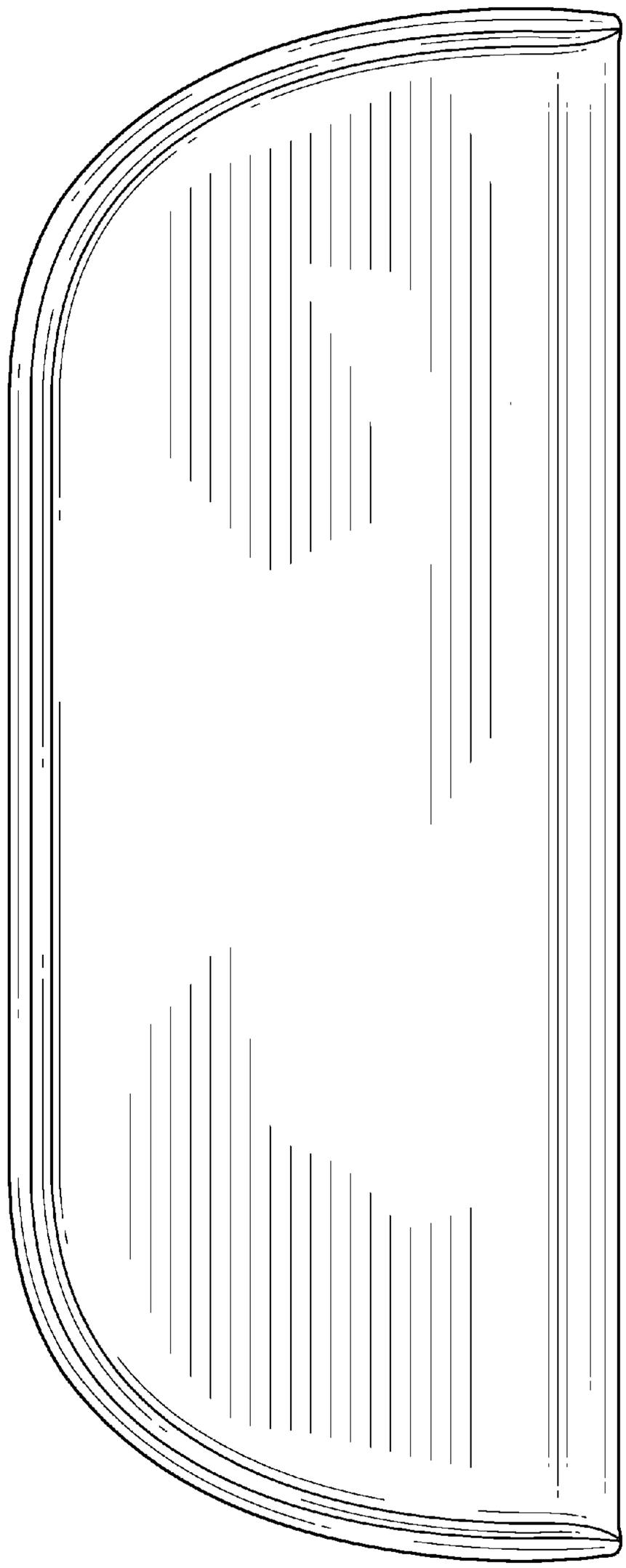

FIG. 3

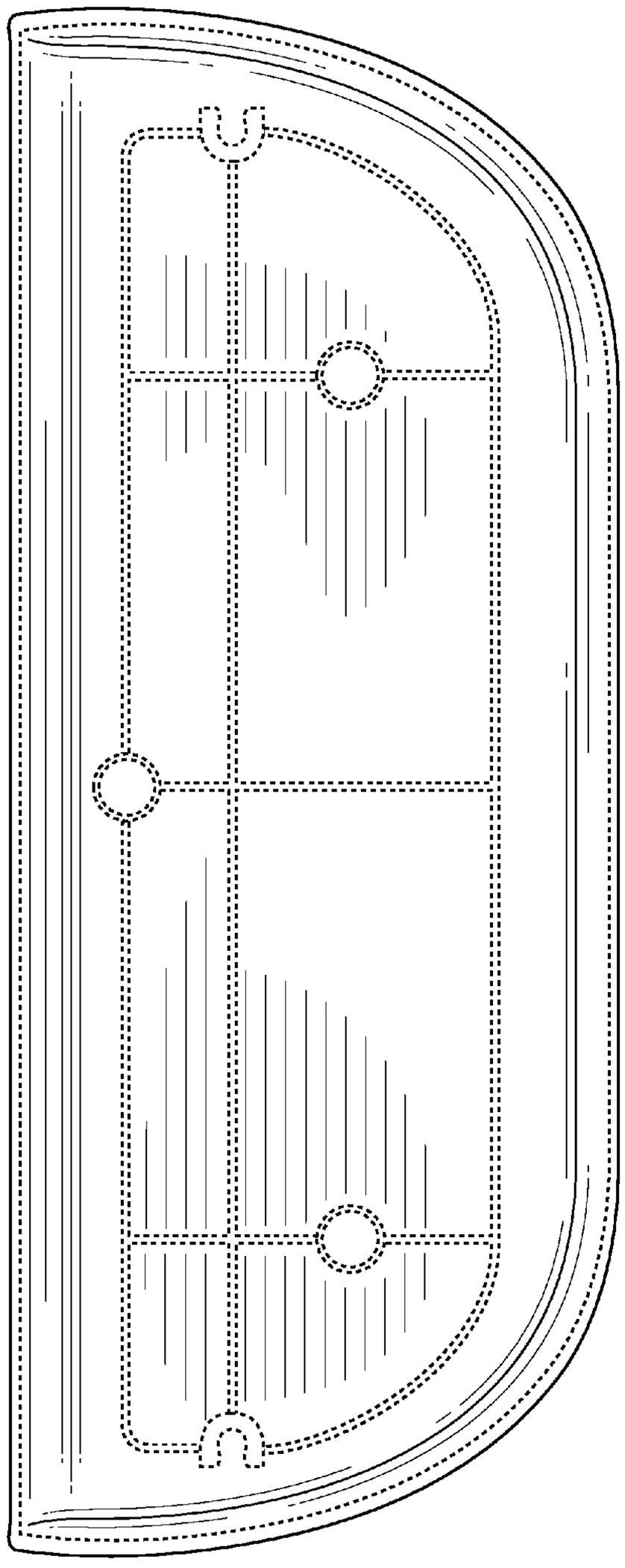

FIG. 4

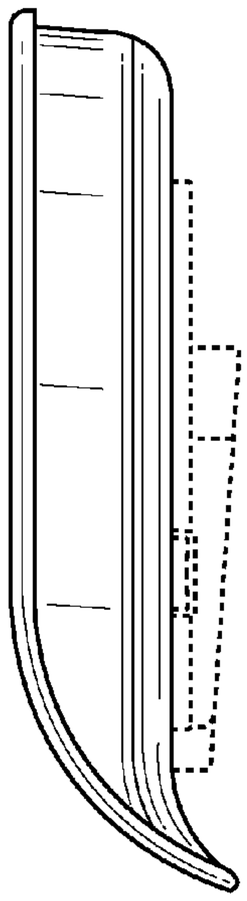

FIG. 6

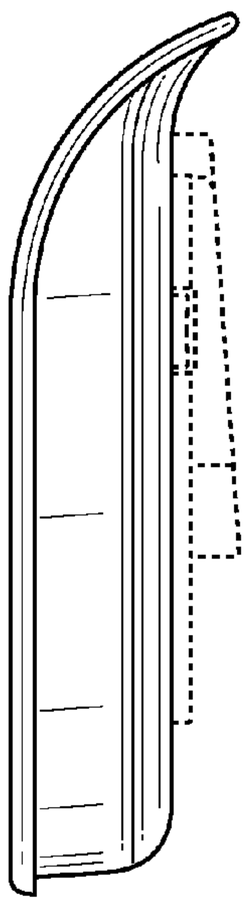

FIG. 5

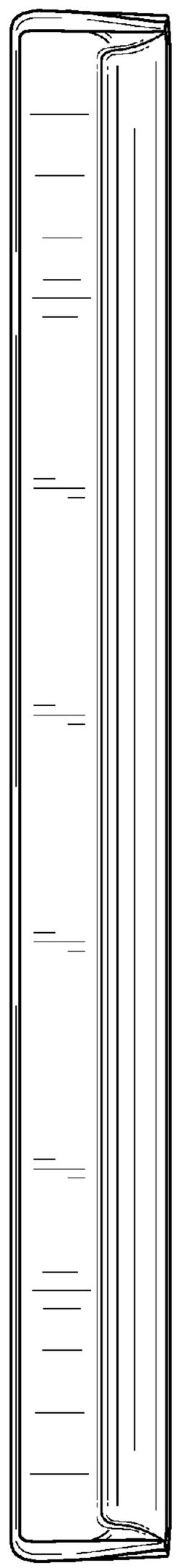

FIG. 7

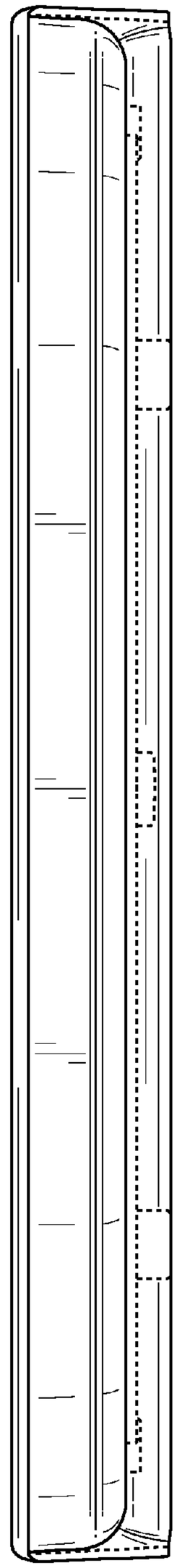

FIG. 8