US00D724453S

(12) United States Design Patent

Ogihara et al.

(10) Patent No.: US D724,453 S
(45) Date of Patent: ** Mar. 17, 2015

(54) **ACTIVITY MONITOR WITH SLEEP STATE MEASURING FUNCTION**

(71) Applicant: **Omron Healthcare Co., Ltd.**, Kyoto (JP)

(72) Inventors: **Tsuyoshi Ogihara**, Kyoto (JP); **Shusuke Eshita**, Kyoto (JP)

(73) Assignee: **Omron Healthcare Co., Ltd.**, Kyoto (JP)

(**) Term: **14 Years**

(21) Appl. No.: **29/492,638**

(22) Filed: **Jun. 2, 2014**

(30) **Foreign Application Priority Data**

Dec. 4, 2013 (JP) 2013-028428

(51) **LOC (10) Cl.** **10-04**

(52) **U.S. Cl.**
USPC **D10/70**; D10/78

(58) **Field of Classification Search**
CPC G08G 1/096883; G08G 1/096872; G08G 1/096775; G01C 21/16; G01C 21/3688; G01C 21/30; G01V 8/20; G01J 5/02; G01J 5/023; G01J 5/24; G01J 5/10; G01J 5/20; G01J 5/0235; G01J 5/08; G01J 5/0853; G01J 5/33; G01J 5/34
USPC D10/70, 78
See application file for complete search history.

(56) **References Cited**

U.S. PATENT DOCUMENTS

D299,718 S * 2/1989 Steer et al. D14/247
D305,422 S * 1/1990 Steer et al. D14/247
D331,020 S * 11/1992 Ishii et al. D10/31
D455,093 S * 4/2002 Fitzgerald D10/98
D528,439 S * 9/2006 Burton D10/32
D528,928 S * 9/2006 Burton D10/38
D536,265 S * 2/2007 Reynoso D10/31
D538,687 S * 3/2007 Komulainen D10/70
D549,602 S * 8/2007 Oberrieder et al. D10/65
D550,105 S * 9/2007 Oberrieder et al. D10/65
D560,520 S * 1/2008 Oberrieder et al. D10/65
D569,282 S * 5/2008 Daniel D10/65
D573,905 S * 7/2008 Poirier D10/65

(Continued)

OTHER PUBLICATIONS

Bodyfit Motion Activity Tracker/Sleep Monitor disclosed on Sports Authority, Inc. website at http://www.sportsauthority.com/BODYFIT-Motion-Activity-Tracker-Sleep-Monitor/product.jsp.

(Continued)

Primary Examiner — Antoine D Davis
(74) *Attorney, Agent, or Firm* — Capitol City TechLaw

(57) **CLAIM**

The ornamental design for an activity monitor with sleep state measuring function, as shown.

DESCRIPTION

FIG. **1** is a front, top, and right side perspective view of an activity monitor with sleep state measuring function showing our new design;
FIG. **2** is a rear, top, and left side perspective view thereof;
FIG. **3** is a front and bottom perspective view thereof;
FIG. **4** is a front view thereof;
FIG. **5** is a rear view thereof;
FIG. **6** is a top view thereof;
FIG. **7** is a bottom view thereof;
FIG. **8** is a right side view thereof; and,
FIG. **9** is a left side view thereof.

1 Claim, 9 Drawing Sheets

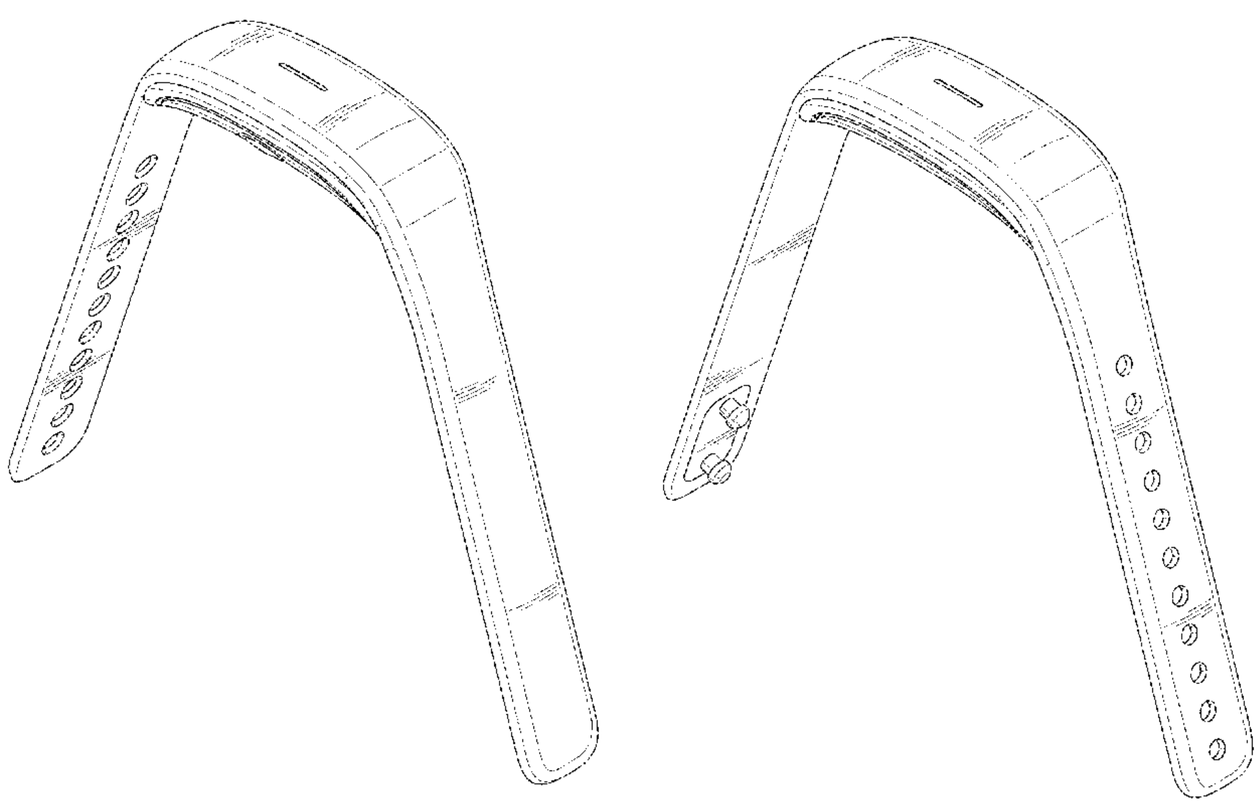

(56) **References Cited**

U.S. PATENT DOCUMENTS

D610,476	S	*	2/2010	Daniel	D10/65
D645,360	S	*	9/2011	Kiser et al.	D10/32
D670,583	S	*	11/2012	Shaanan	D10/70
D672,667	S	*	12/2012	Mix	D10/65
D718,647	S	*	12/2014	Roush et al.	D10/98

OTHER PUBLICATIONS

Moveband disclosed on docomo Healthcare, Inc. website at http://www.d-healthcare.co.jp/products/moveband/.

* cited by examiner

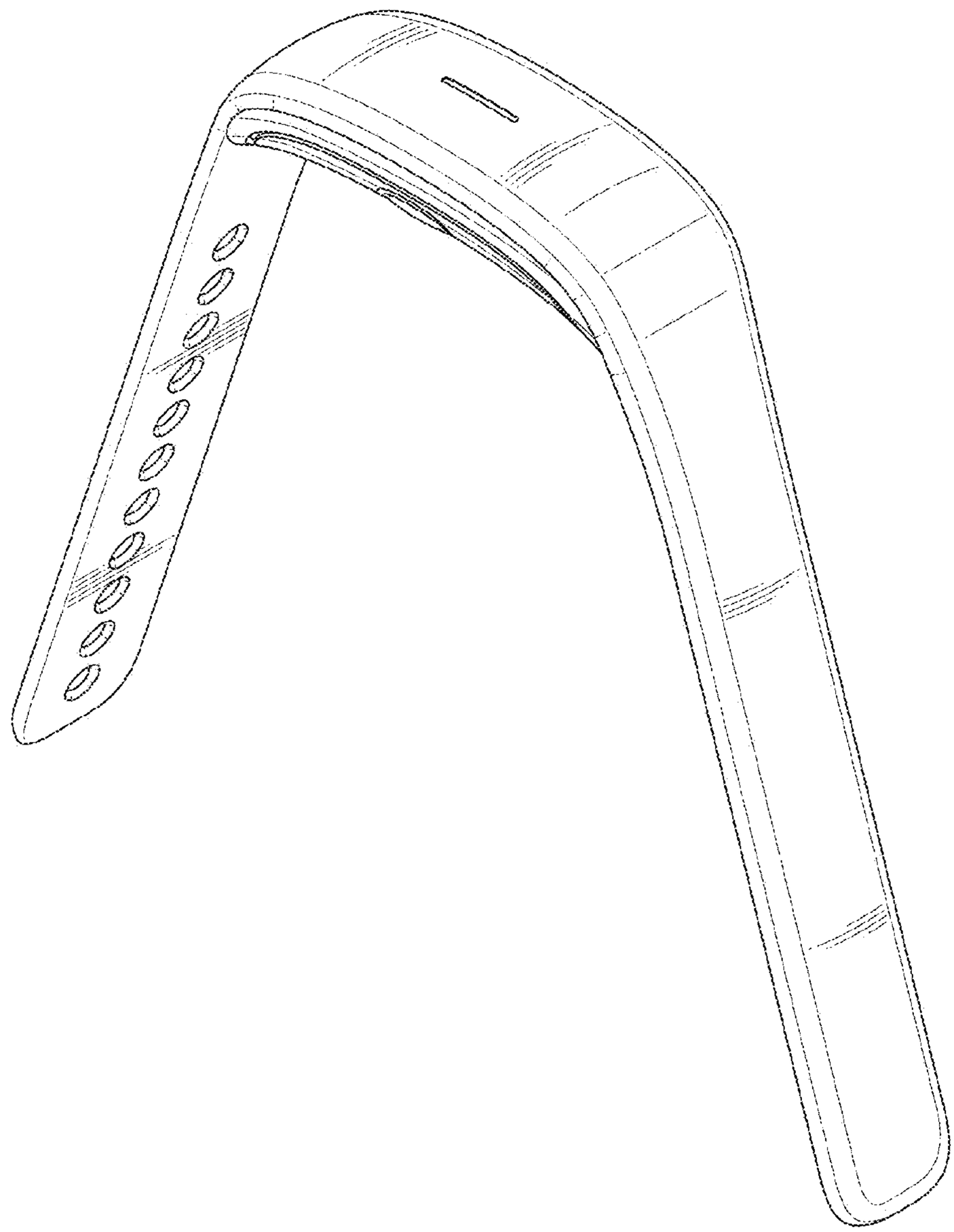

FIG.1

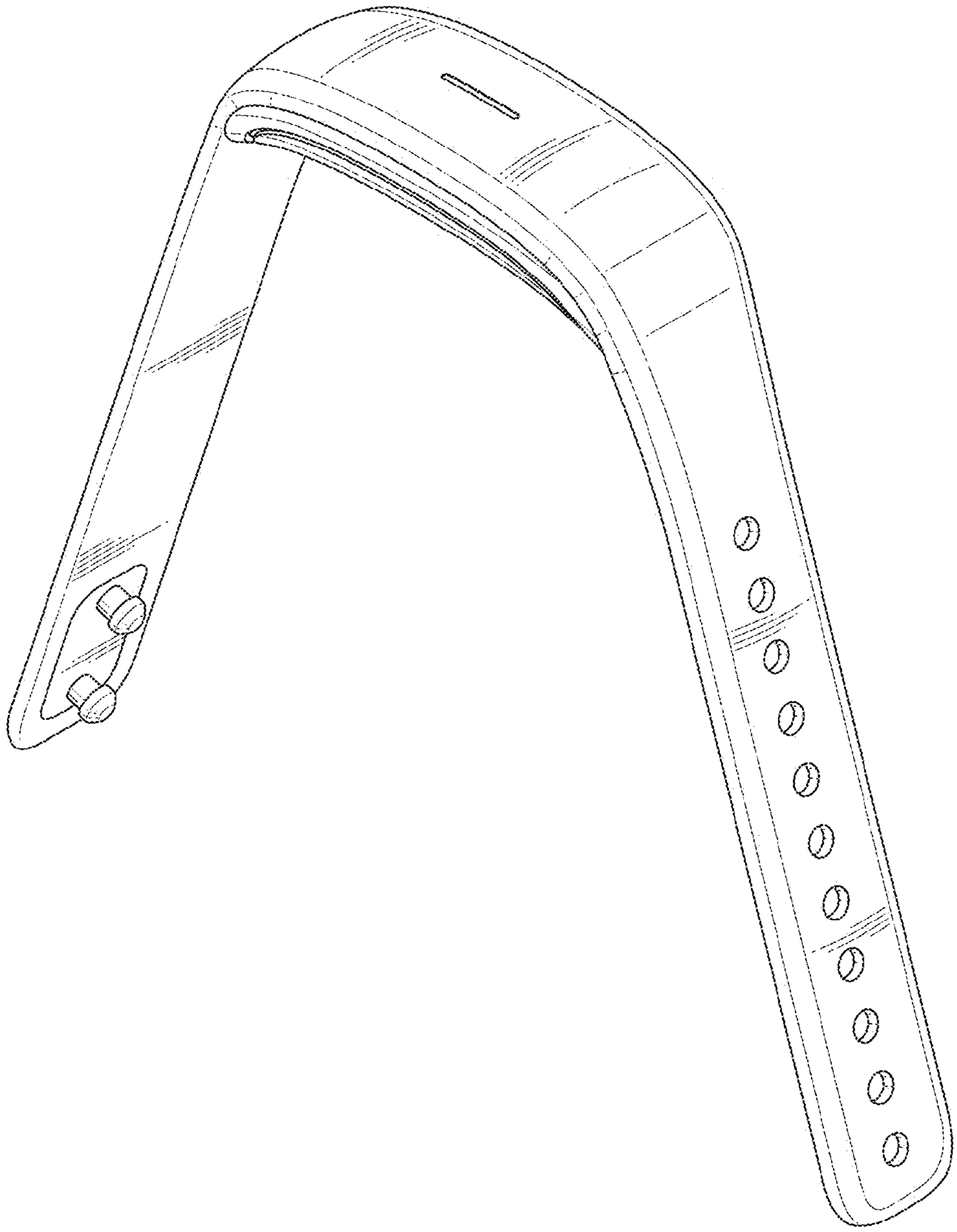

FIG.2

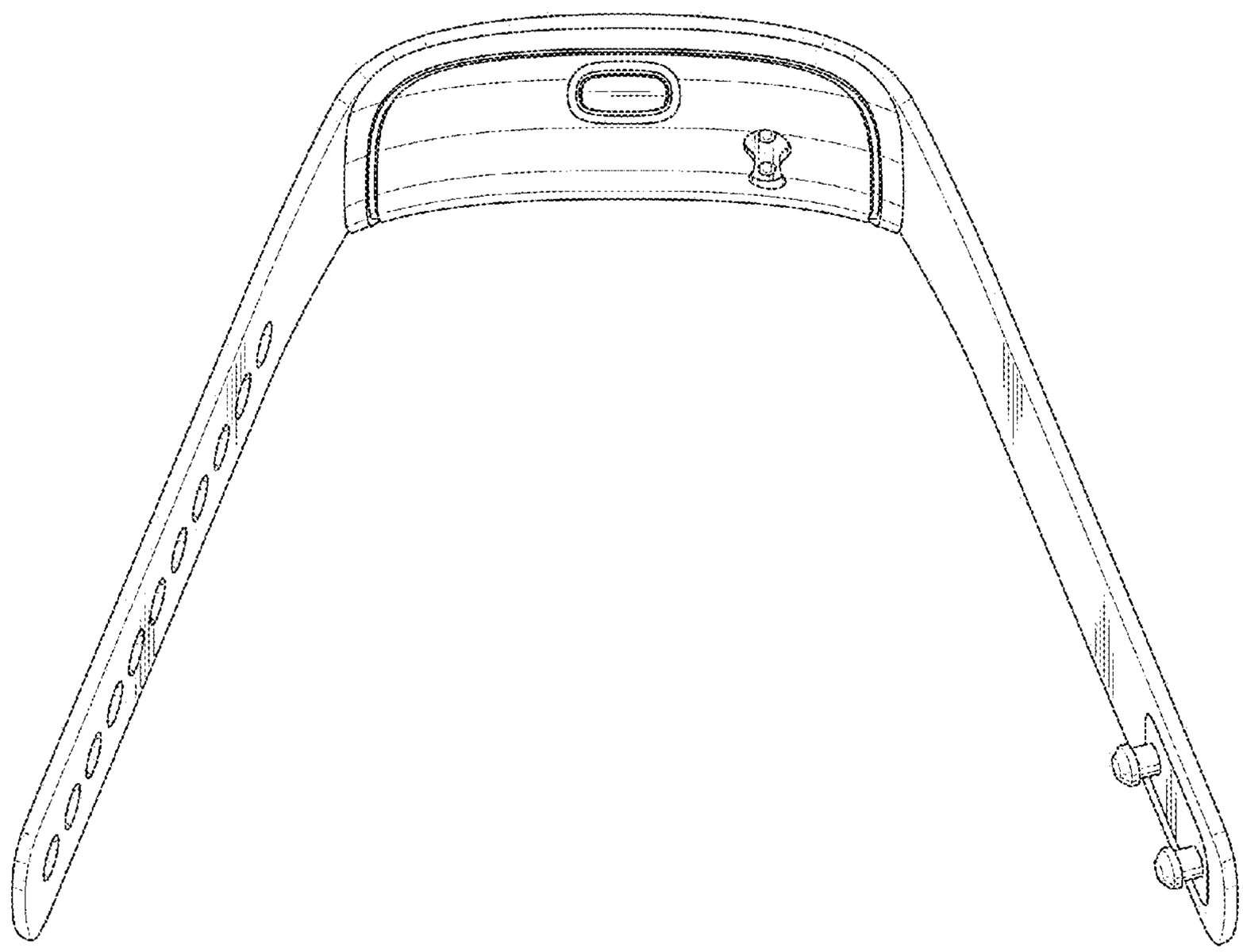

FIG.3

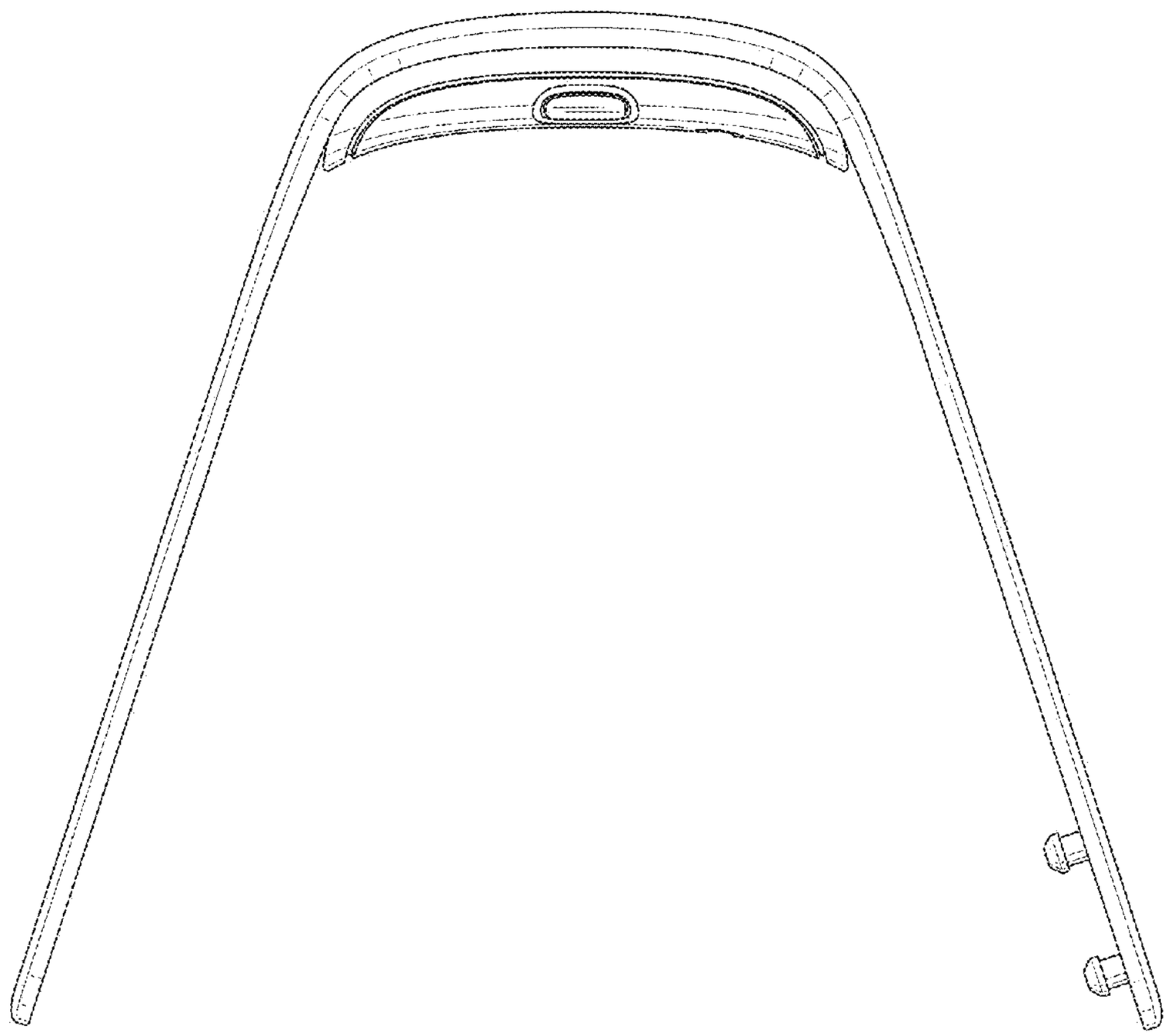

FIG.4

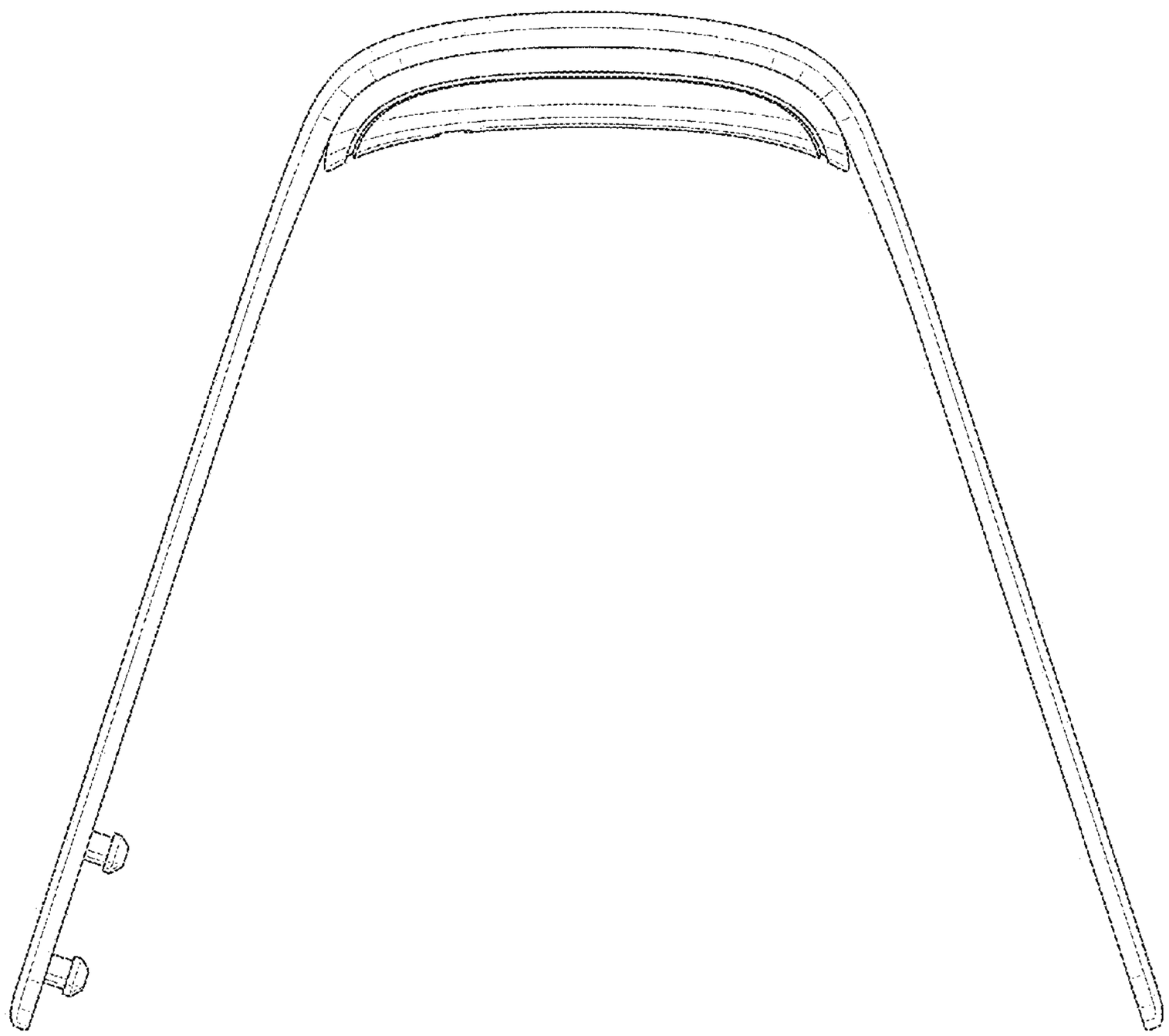

FIG.5

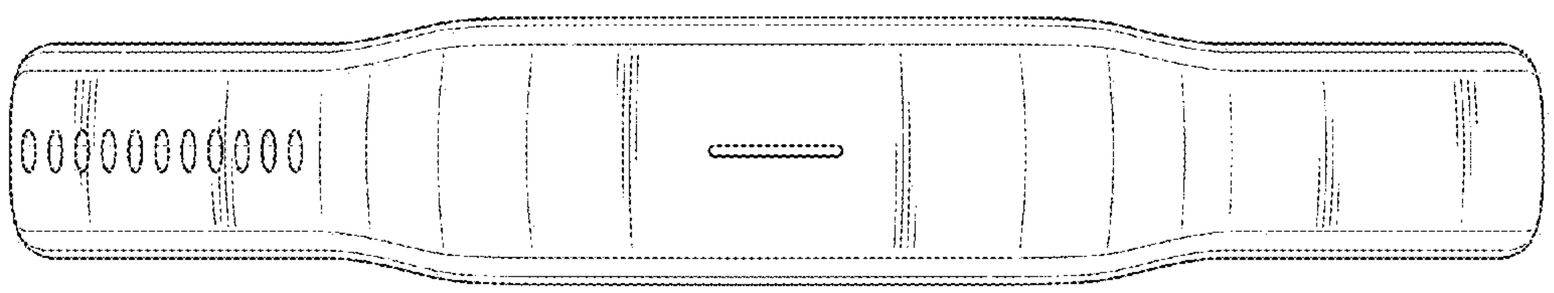

FIG.6

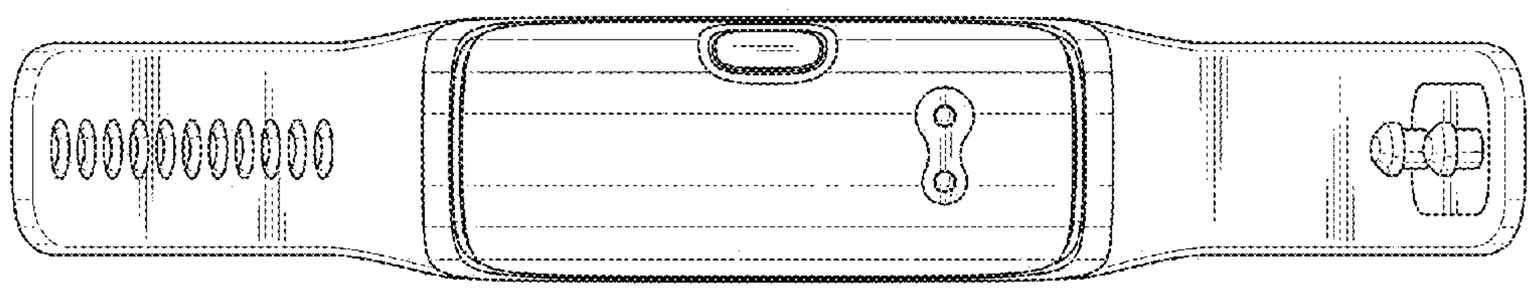

FIG.7

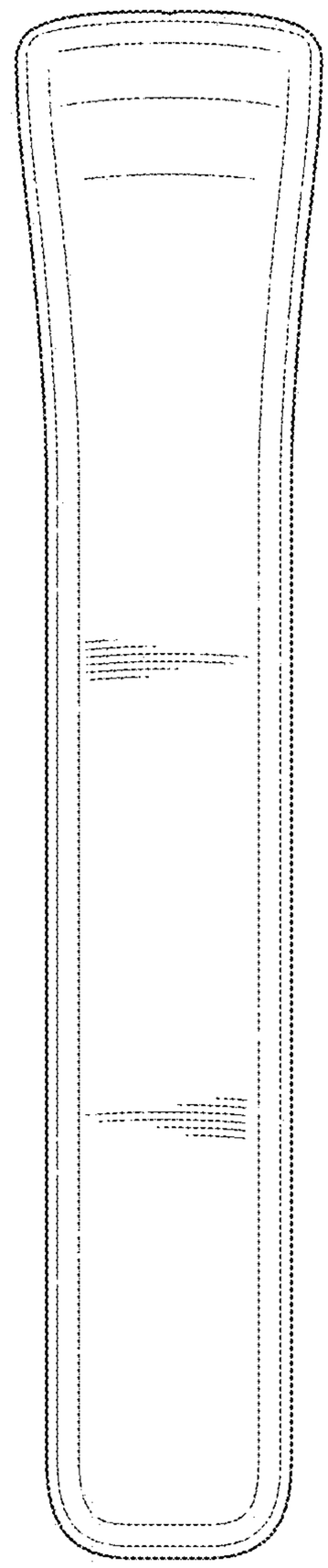

FIG.8

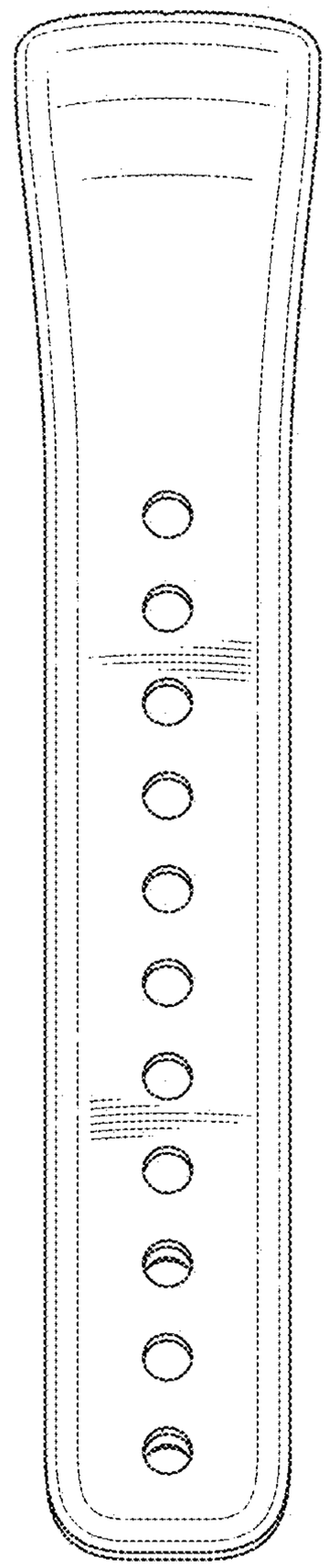

FIG.9