US00D723764S

(12) United States Design Patent
Yaschur

(10) Patent No.: US D723,764 S
(45) Date of Patent: ** Mar. 3, 2015

(54) **CORDLESS WHEEL LIFT**

(71) Applicant: **Ingersoll-Rand Company**, Davidson, NC (US)

(72) Inventor: **Jefferey Clifford Yaschur**, Doylestown, PA (US)

(73) Assignee: **Ingersoll-Rand Company**, Davidson, NC (US)

(**) Term: **14 Years**

(21) Appl. No.: **29/480,815**

(22) Filed: **Jan. 29, 2014**

(51) **LOC (10) Cl.** **12-05**

(52) **U.S. Cl.**
USPC **D34/28**

(58) **Field of Classification Search**
CPC B66F 5/04; B66F 15/00; B66F 11/048; B66F 19/005; B62B 3/0625; B66C 23/48
USPC ..... D34/28, 33, 31; 254/131, 8 R, 120; 414/426, 427, 433, 428, 430; 280/400, 280/79.4; D8/31, 14, 88, 89
See application file for complete search history.

(56) **References Cited**

U.S. PATENT DOCUMENTS

2,490,233	A	12/1949	Schildmeier	
4,872,694	A *	10/1989	Griesinger	280/79.4
D319,131	S *	8/1991	Smeitink	D34/23
D344,835	S *	3/1994	MacEachern	D34/31
5,694,864	A	12/1997	Langewellpott	
D468,512	S *	1/2003	Hernandez	D34/28
D488,905	S *	4/2004	DiStaulo	D34/28
6,863,488	B2	3/2005	Chopra	
D532,575	S *	11/2006	Oberg	D34/28
7,137,615	B2 *	11/2006	Ray et al.	254/10 B
D589,224	S *	3/2009	Kilpatrick	D34/28
D596,823	S *	7/2009	Thurm	D34/28
D640,440	S *	6/2011	Thurm	D34/28
7,980,804	B2	7/2011	Snook et al.	

(Continued)

FOREIGN PATENT DOCUMENTS

GB	2187435 A	9/1987
GB	2274269 A	7/1994

(Continued)

OTHER PUBLICATIONS

Purdue University, "Compac 90538 Wheel Dolly," Sep. 13, 2012, 3 pages.

(Continued)

Primary Examiner — Cynthia Ramirez
(74) *Attorney, Agent, or Firm* — Barnes & Thornburg LLP

(57) **CLAIM**

The ornamental design for a cordless wheel lift, as shown and described.

DESCRIPTION

FIG. **1** is a front perspective view of a design of a cordless wheel lift;
FIG. **2** is a front elevation view of the cordless wheel lift of FIG. **1**;
FIG. **3** is a rear elevation view of the cordless wheel lift of FIG. **1**;
FIG. **4** is a first side elevation view of the cordless wheel lift of FIG. **1**;
FIG. **5** is a second side elevation view of the cordless wheel lift of FIG. **1**;
FIG. **6** is a top plan view of the cordless wheel lift of FIG. **1**; and,
FIG. **7** is a bottom plan view of the cordless wheel lift of FIG. **1**.
The broken lines shown in the figures depict environmental subject matter and form no part of the claimed design.

1 Claim, 7 Drawing Sheets

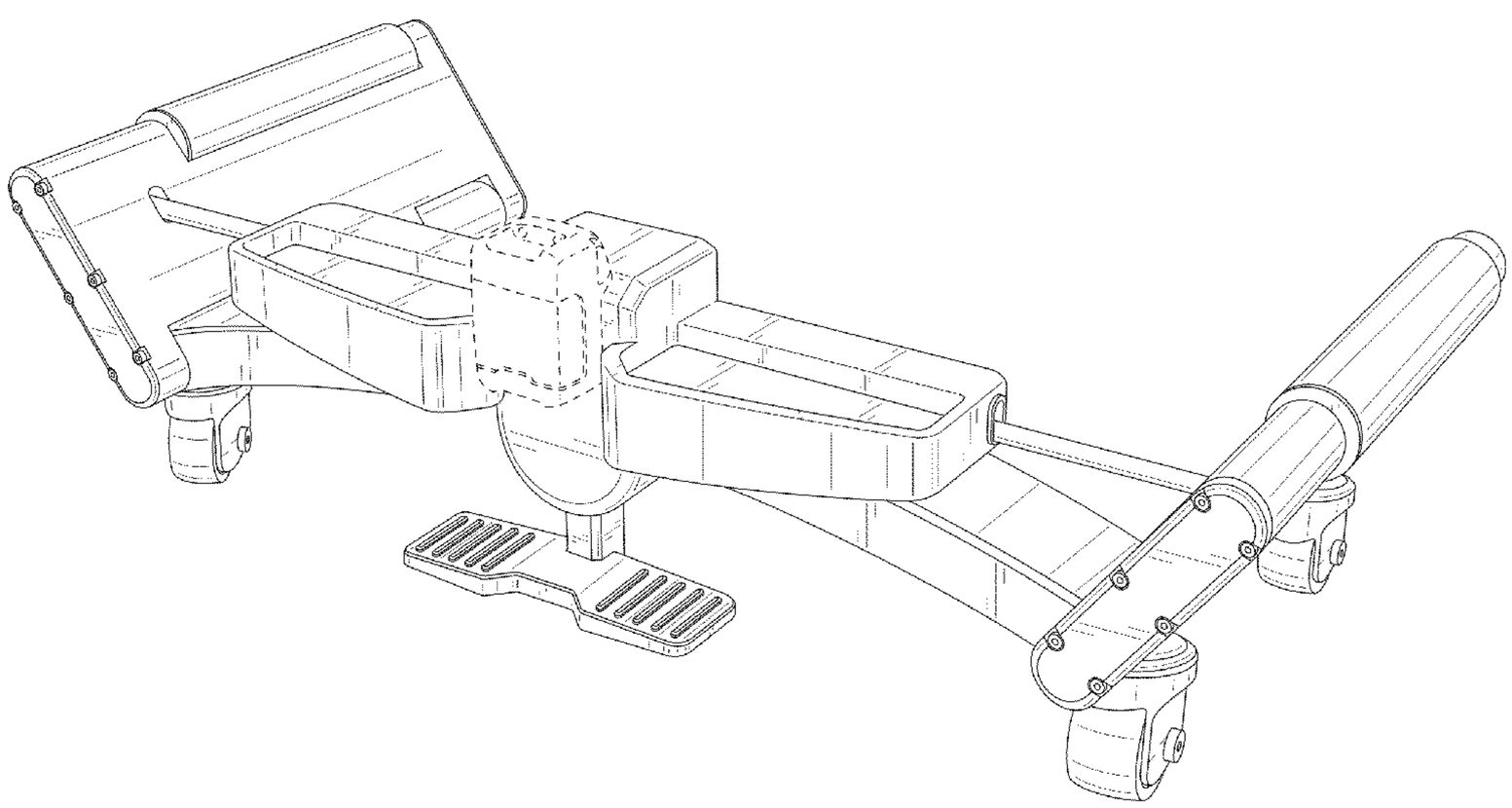

(56) **References Cited**

U.S. PATENT DOCUMENTS

D703,906	S *	4/2014	Gann et al.	D34/28
D712,111	S *	8/2014	Chernyshou	D34/28
2006/0181057	A1	8/2006	Kollarits et al.	
2010/0092270	A1	4/2010	Adams	
2010/0207085	A1 *	8/2010	Thurm	254/2 C
2013/0134685	A1	5/2013	John	
2013/0276306	A1	10/2013	Calvi	

FOREIGN PATENT DOCUMENTS

WO	2009056168	A1	5/2009
WO	2011132168	A1	10/2011

OTHER PUBLICATIONS

Northern Tool + Equipment, "Torin Wheel Dolly— Heavy-Duty, 2400-Lb. Capacity, Model# TX12001," available at http://www.northerntool.com/shop/tools/product_200381630_200381630, 1 page.

Northern Tool + Equipment, "TSI Clever Lever@ Tire Caddie— for 36-48in. Dia. Tires, Model# HD26," available at http://www.northerntool.com/shop/tools/product_200327731_200327731, 1 page.

TSISSG, "TW2000 Twee! Handler," 2013, 1 page.

T & L Industries Co., "Red Viper Heavy Duty Jack Dolly," available at http://red-viper.com/products/, 2013, 4 pages.

TSISSG, "Tire Carts & Dollies," 2013, 1 page.

* cited by examiner

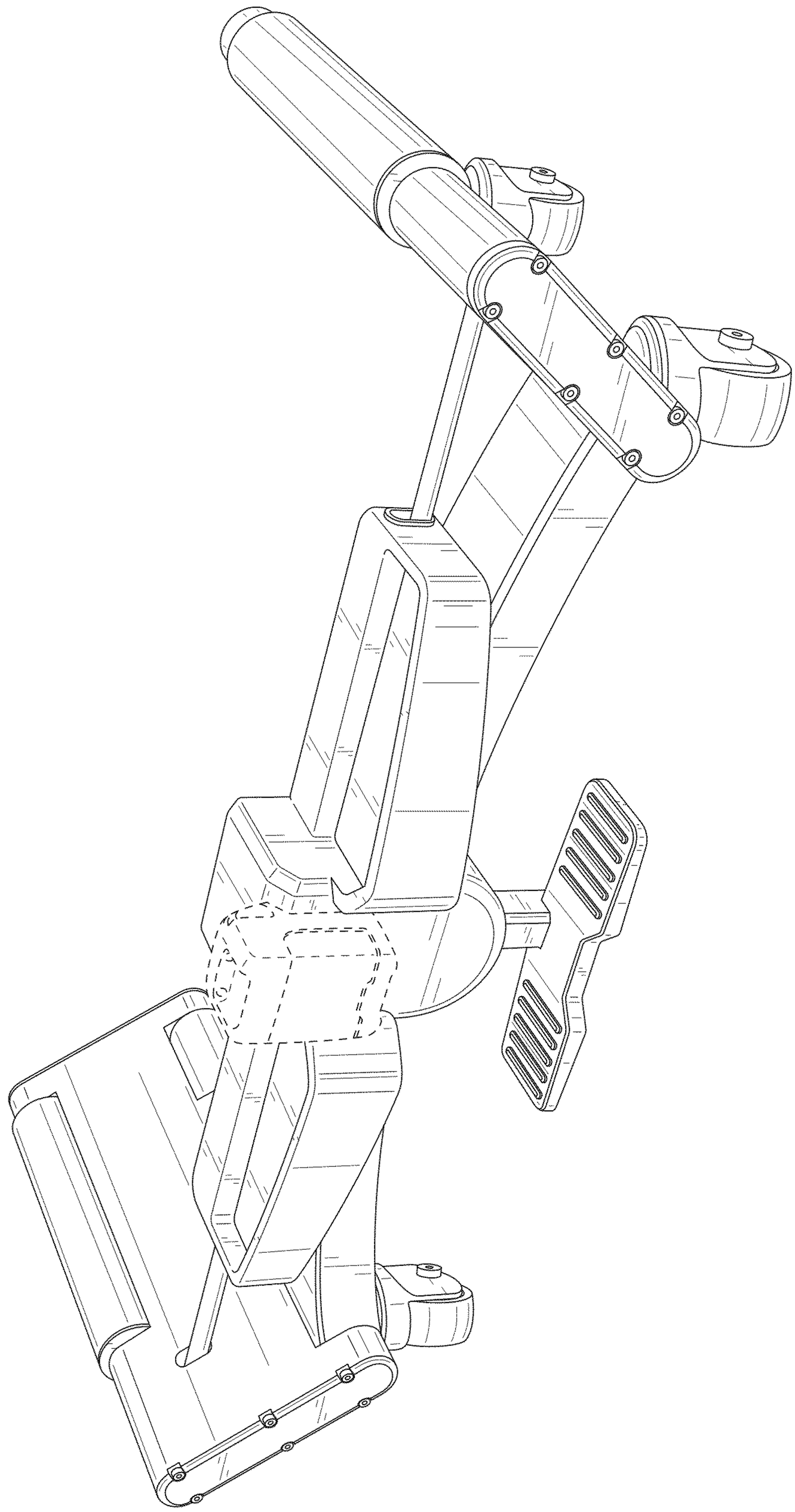

FIG. 1

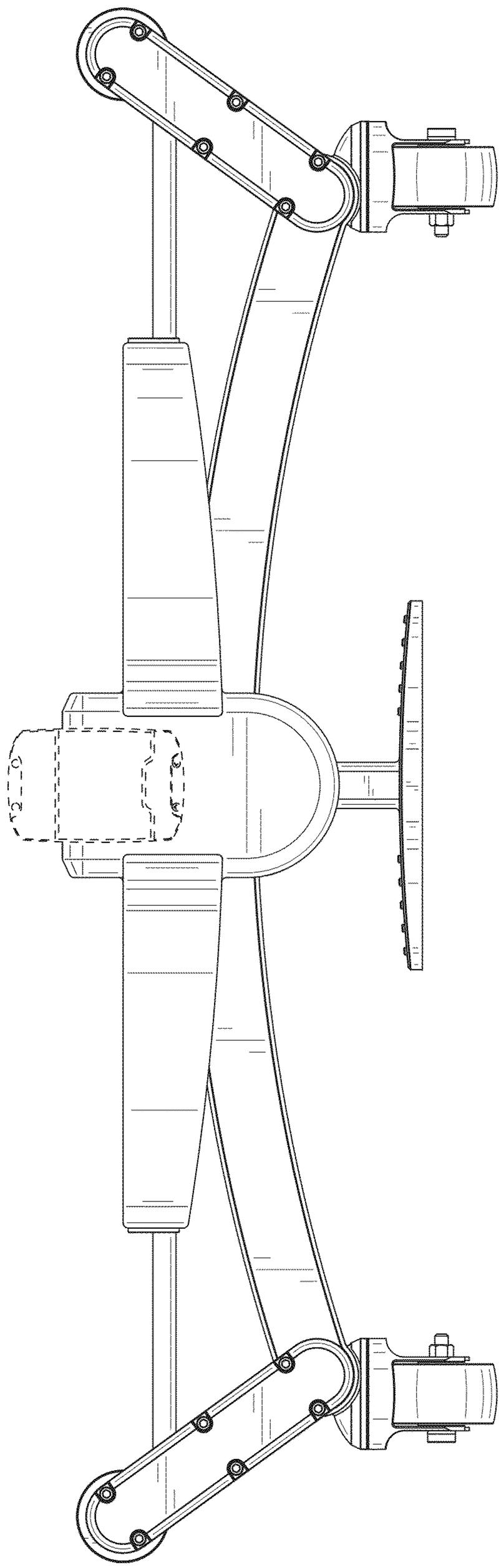

FIG. 2

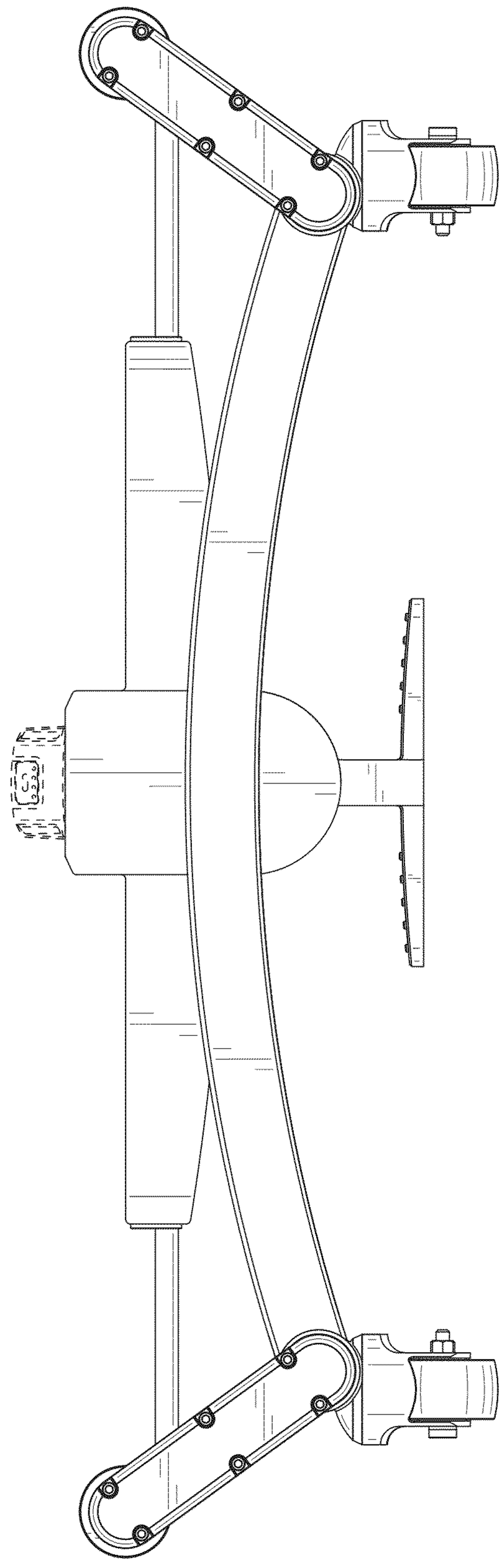

FIG. 3

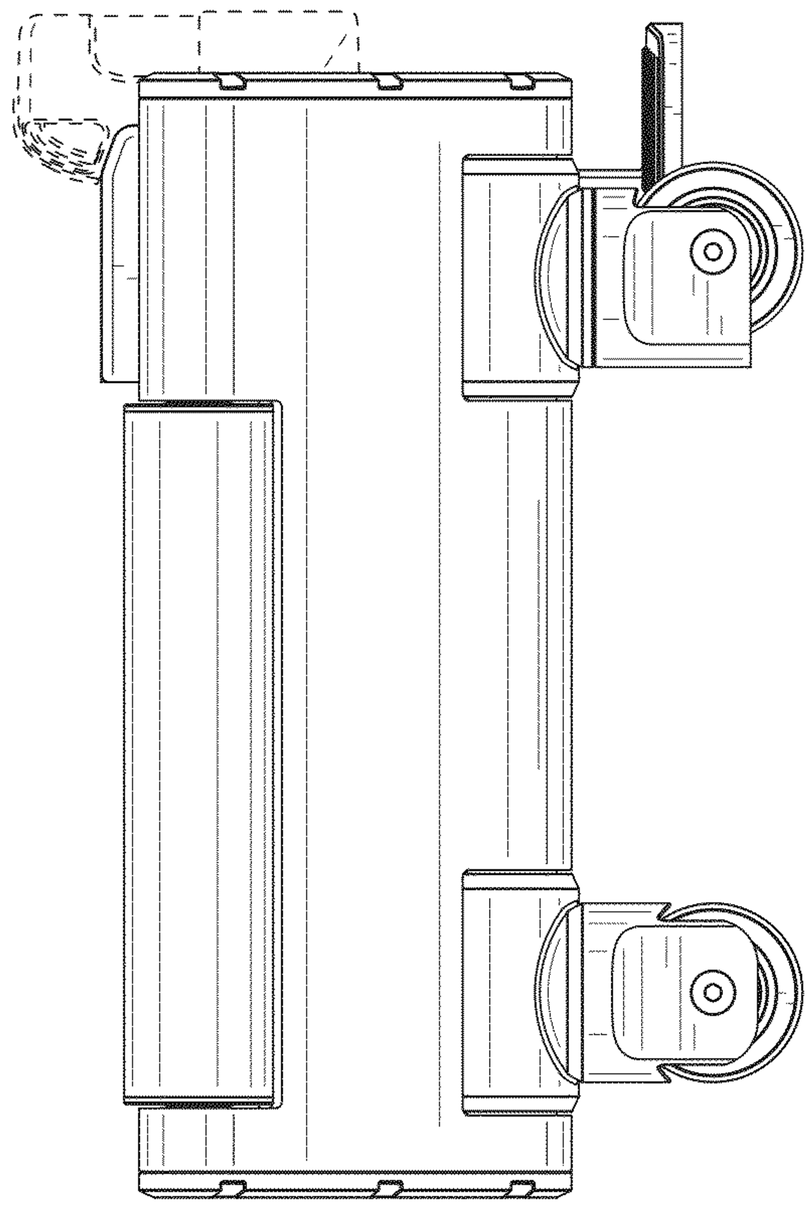

FIG. 4

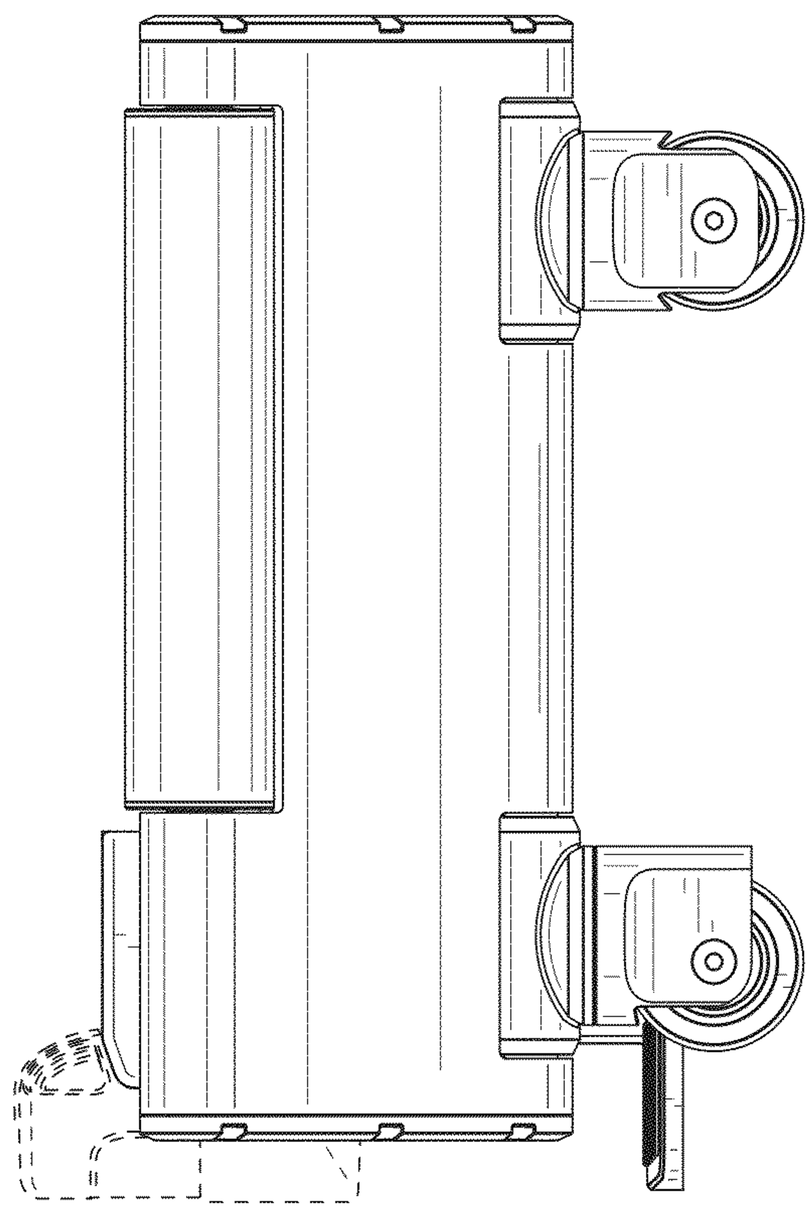

FIG. 5

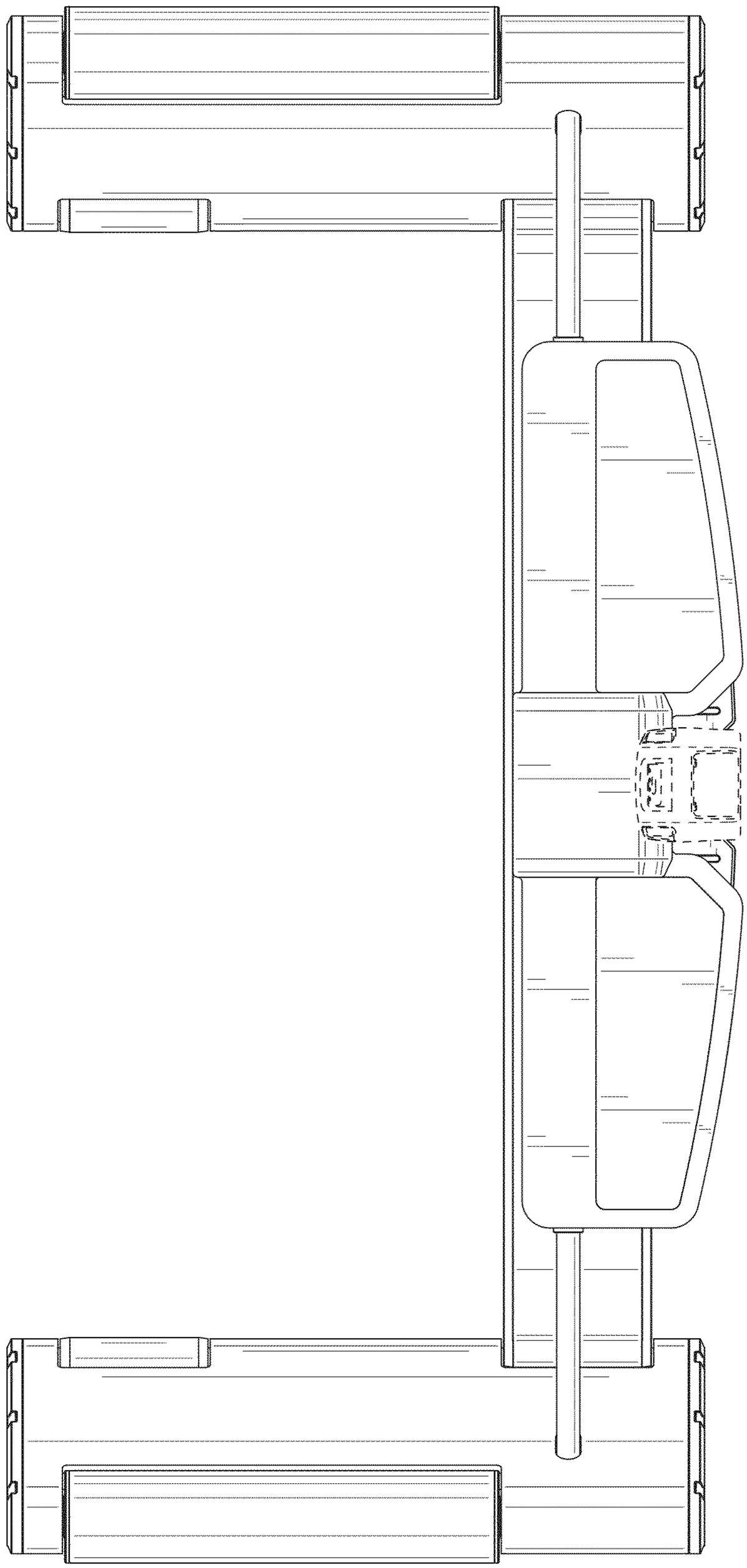

FIG. 6

FIG. 7