US00D721724S

(12) United States Design Patent

Horst et al.

(10) Patent No.: US D721,724 S
(45) Date of Patent: ** Jan. 27, 2015

(54) **DISPLAY PANEL WITH GRAPHICAL USER INTERFACE**

(71) Applicant: **United States Green Building Council (USGBC)**, Washington, DC (US)

(72) Inventors: **Scot Horst**, Kutztown, PA (US); **Mahesh Ramanujam**, Durham, NC (US); **Dhruv Gami**, Pittsburgh, PA (US); **S. Richard Fedrizzi**, Syracuse, NY (US); **Vincenzo Anthony Trincia, III**, San Francisco, CA (US); **Silvia Boscolo Bielo**, San Francisco, CA (US); **Kimberly Jean Cullen**, San Francisco, CA (US); **Claudio Fresneda Neumann**, San Francisco, CA (US); **Steven Bishop**, Mountain View, CA (US)

(73) Assignee: **U.S. Green Building Council**, Washington, DC (US)

(**) Term: **14 Years**

(21) Appl. No.: **29/450,278**

(22) Filed: **Mar. 15, 2013**

(51) **LOC (10) Cl.** **14-04**

(52) **U.S. Cl.**
USPC **D14/486**

(58) **Field of Classification Search**
USPC D14/485–495; 715/700, 703, 716, 726, 715/730, 732, 771, 773, 779, 793, 808, 809, 715/810, 832, 834, 837, 839, 840, 864, 970, 715/977
See application file for complete search history.

(56) **References Cited**

U.S. PATENT DOCUMENTS

D474,197 S * 5/2003 Nguyen D14/486
D614,192 S * 4/2010 Takano et al. D14/486
(Continued)

Primary Examiner — Angela J Lee

(57) **CLAIM**

The ornamental design for a display panel with graphical user interface, as shown and described.

DESCRIPTION

FIG. **1** shows a top right perspective view of a first embodiment of a display panel with graphical user interface showing our new design;
FIG. **2** is a top right perspective view thereof showing a second embodiment;
FIG. **3** is a top right perspective view thereof showing a third embodiment;
FIG. **4** is a top right perspective view thereof showing the first embodiment with a different broken line environment;
FIG. **5** is a top right perspective view thereof showing the second embodiment with a different broken line environment;
FIG. **6** is a top right perspective view thereof showing the third embodiment with a different broken line environment;
FIG. **7** is a top right perspective view thereof showing the first embodiment with a different broken line environment;
FIG. **8** is a top right perspective view thereof showing the second embodiment with a different broken line environment;
FIG. **9** is a top right perspective view thereof showing the third embodiment with a different broken line environment;
FIG. **10** is a top right perspective view thereof showing the first embodiment with a different broken line environment;
FIG. **11** is a top right perspective view thereof showing the second embodiment with a different broken line environment;
FIG. **12** is a top right perspective view thereof showing the third embodiment with a different broken line environment;
FIG. **13** is a top right perspective view thereof showing the first embodiment with a different broken line environment;
FIG. **14** is a top right perspective view thereof showing the second embodiment with a different broken line environment, and,
FIG. **15** is a top right perspective view thereof showing the third embodiment with a different broken line environment.

1 Claim, 15 Drawing Sheets

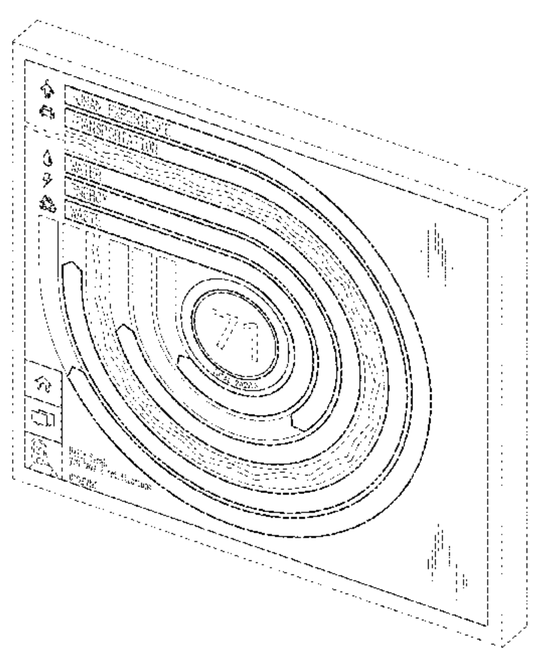

(56) **References Cited**

U.S. PATENT DOCUMENTS

D645,470	S *	9/2011	Matas	D14/489
8,117,557	B2 *	2/2012	Dotson et al.	715/771
D676,060	S *	2/2013	Frost et al.	D14/490
D684,586	S *	6/2013	Plesnicher et al.	D14/486
D697,080	S *	1/2014	Scholz et al.	D14/489
D700,197	S *	2/2014	Akcasu et al.	D14/486
D700,198	S *	2/2014	Akcasu et al.	D14/486
D700,618	S *	3/2014	Hwang et al.	D14/486
D701,226	S *	3/2014	Jung	D14/486
2007/0136679	A1 *	6/2007	Yang	715/772

* cited by examiner

FIG. 1

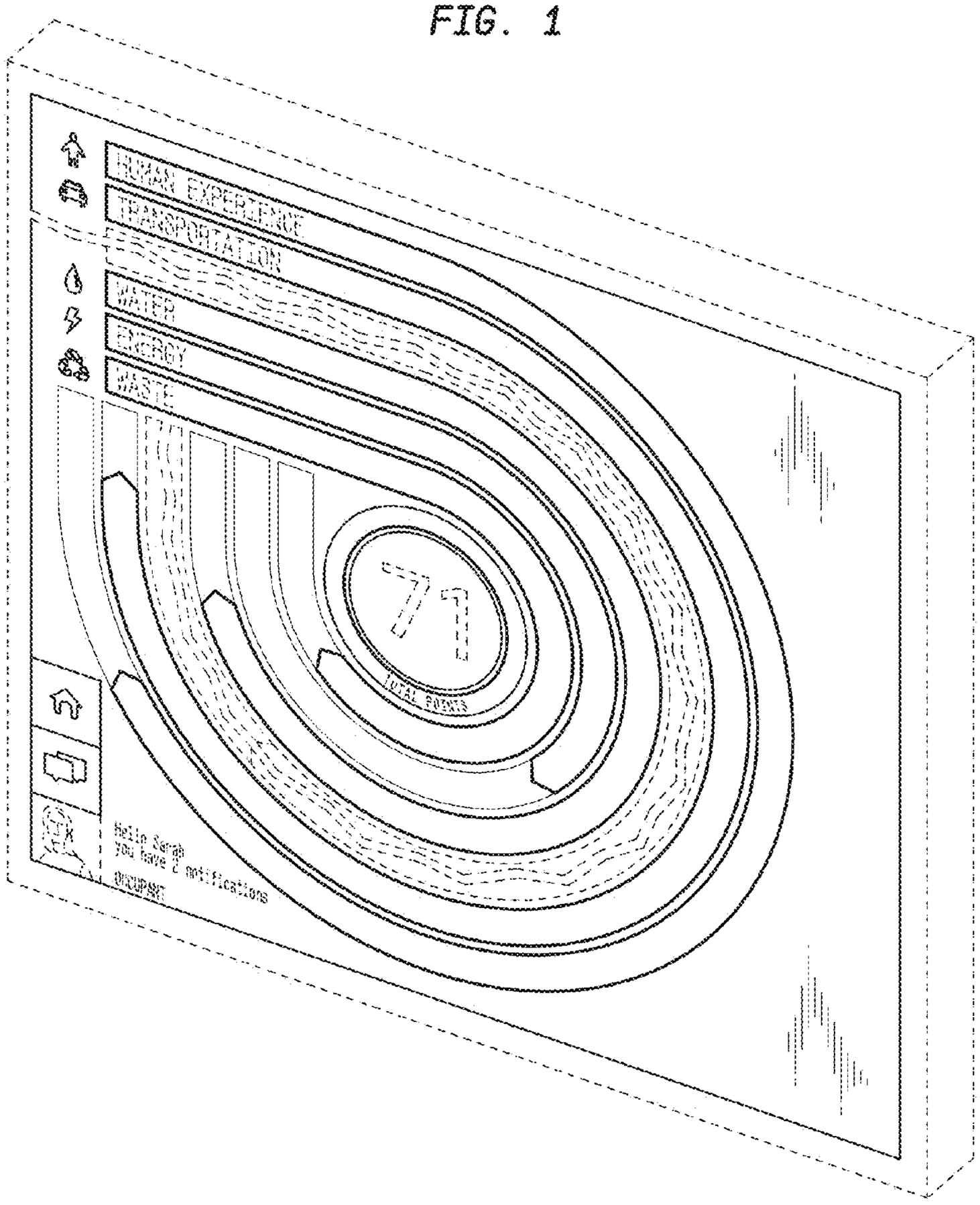
HUMAN EXPERIENCE
TRANSPORTATION
WATER
ENERGY
WASTE
71
TOTAL POINTS
Hello Sarah
you have 2 notifications
DISMISS

FIG. 2

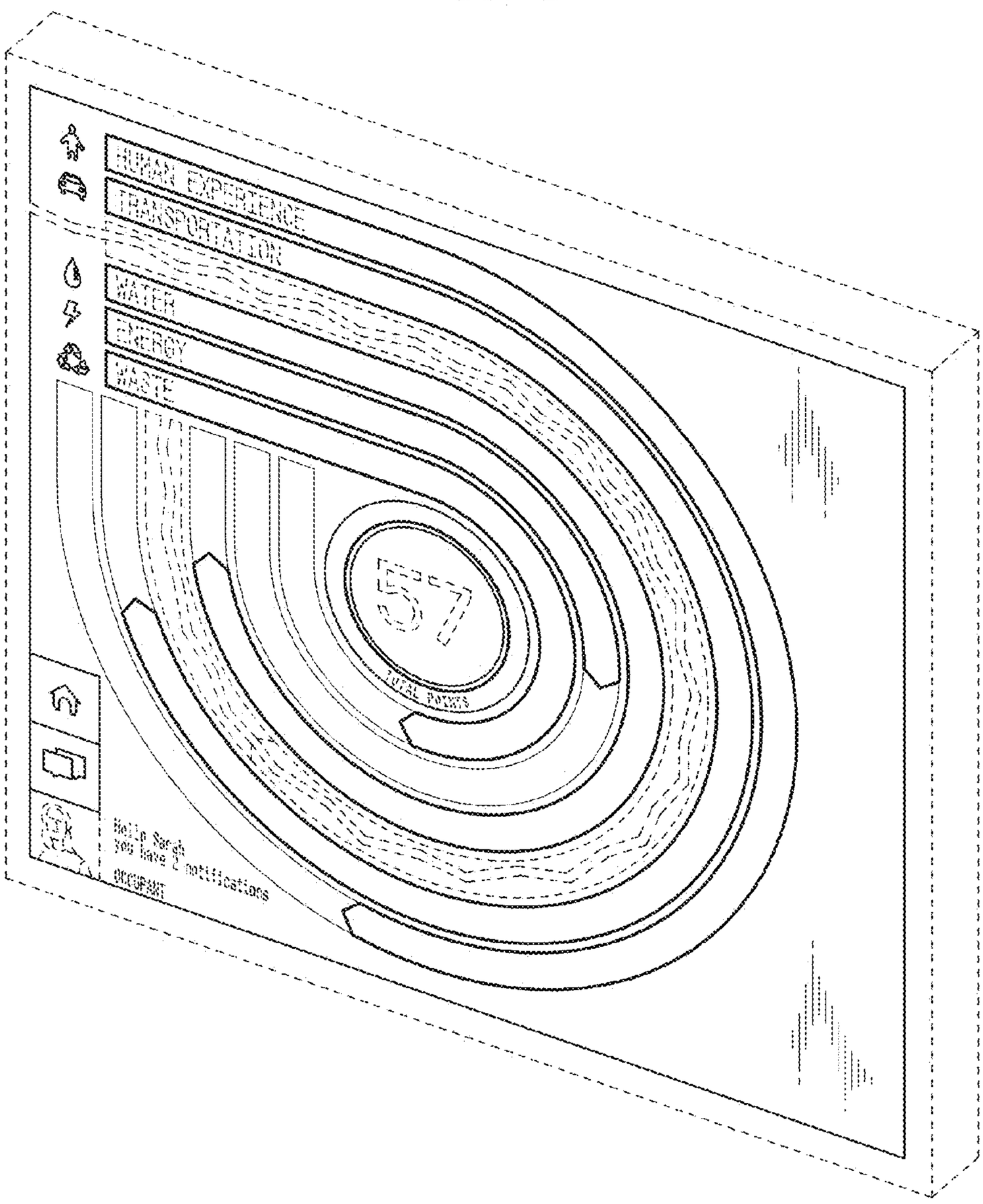
HUMAN EXPERIENCE
TRANSPORTATION
WATER
ENERGY
WASTE
57
TOTAL POINTS
Hello Sarah
You have 2 notifications
DISCUSS

FIG. 3

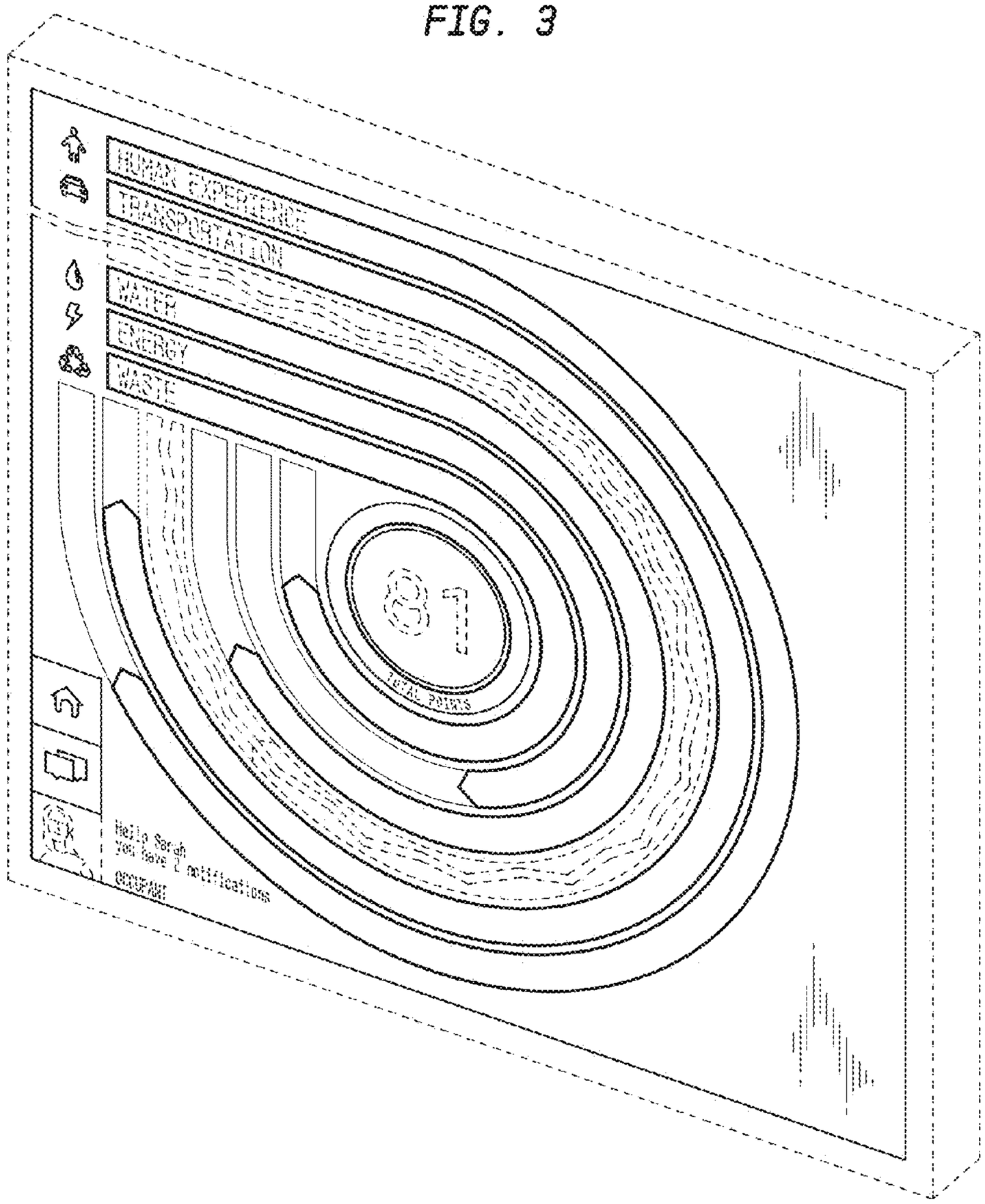
HUMAN EXPERIENCE
TRANSPORTATION
WATER
ENERGY
WASTE
81
TOTAL POINTS
Hello Sarah
You have 2 notifications
SHOW ME

FIG. 4

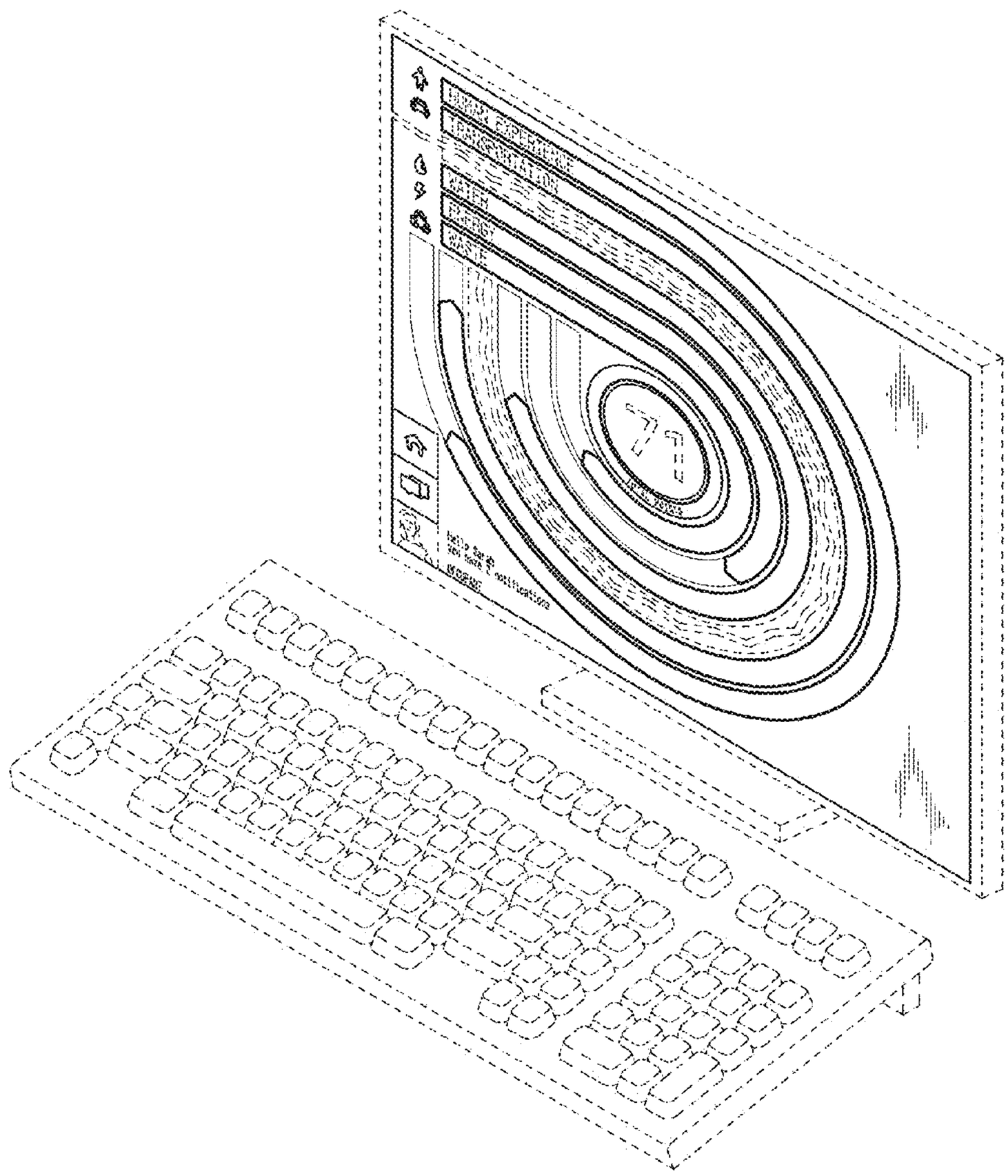

FIG. 5

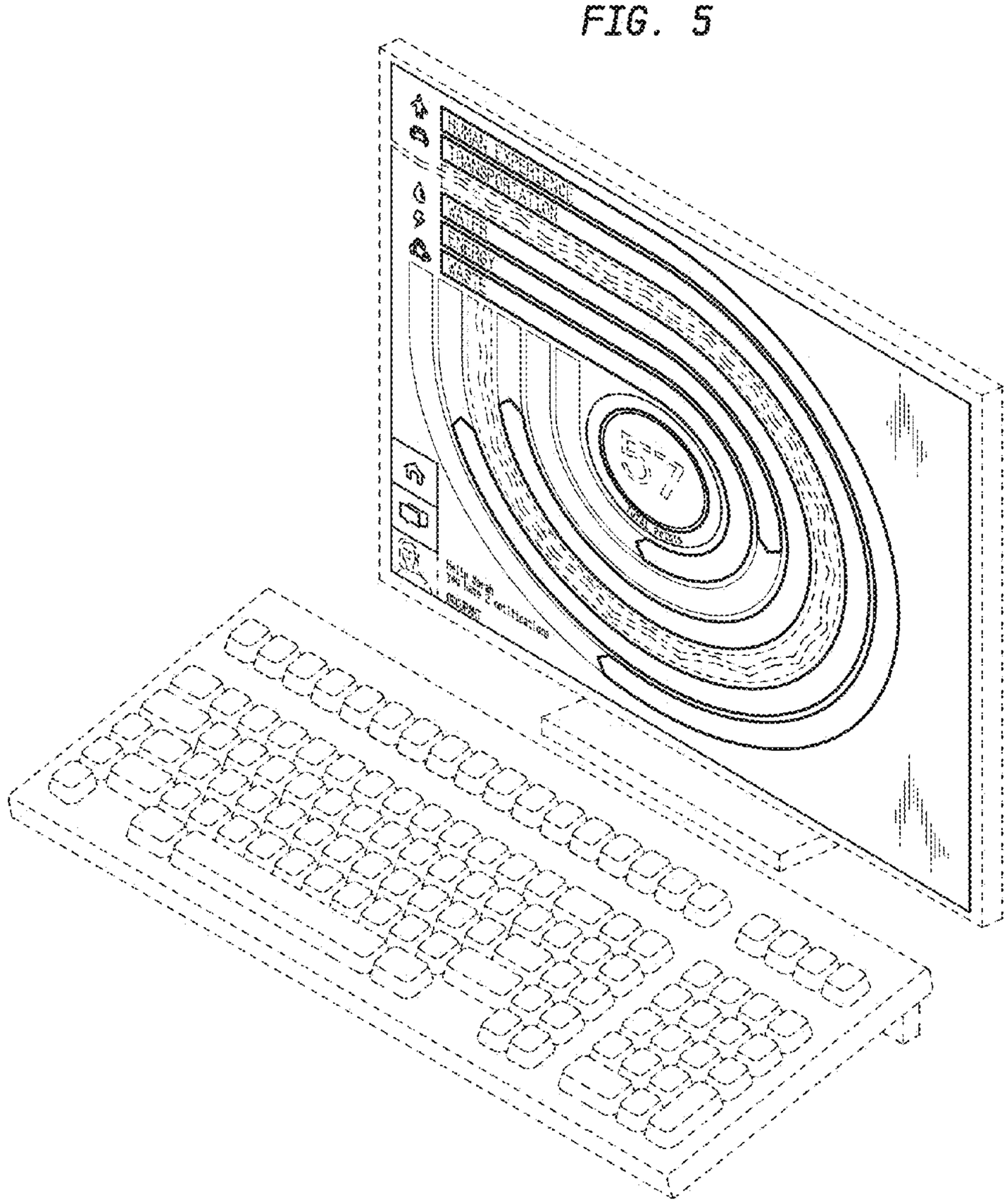

FIG. 6

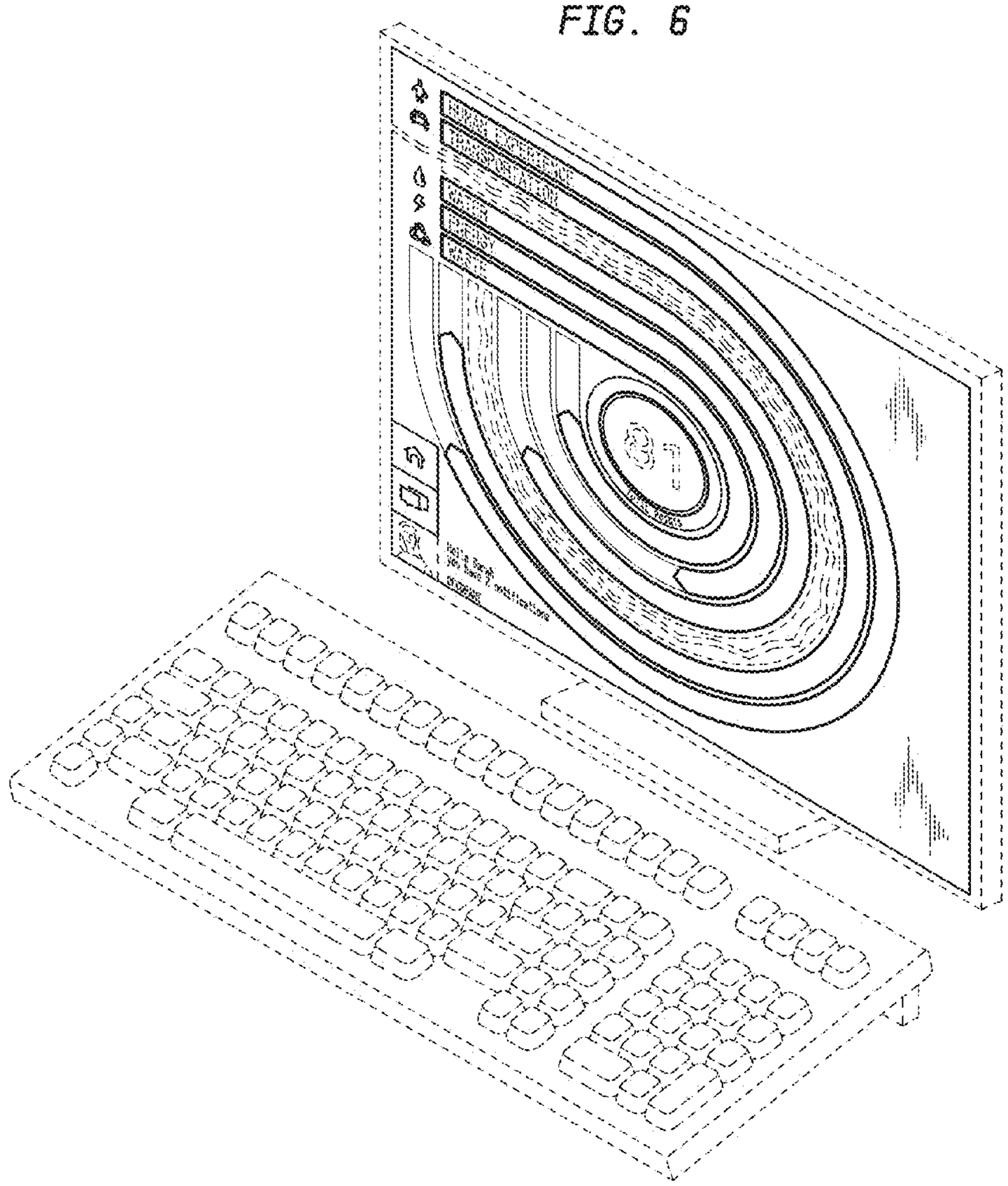

FIG. 7

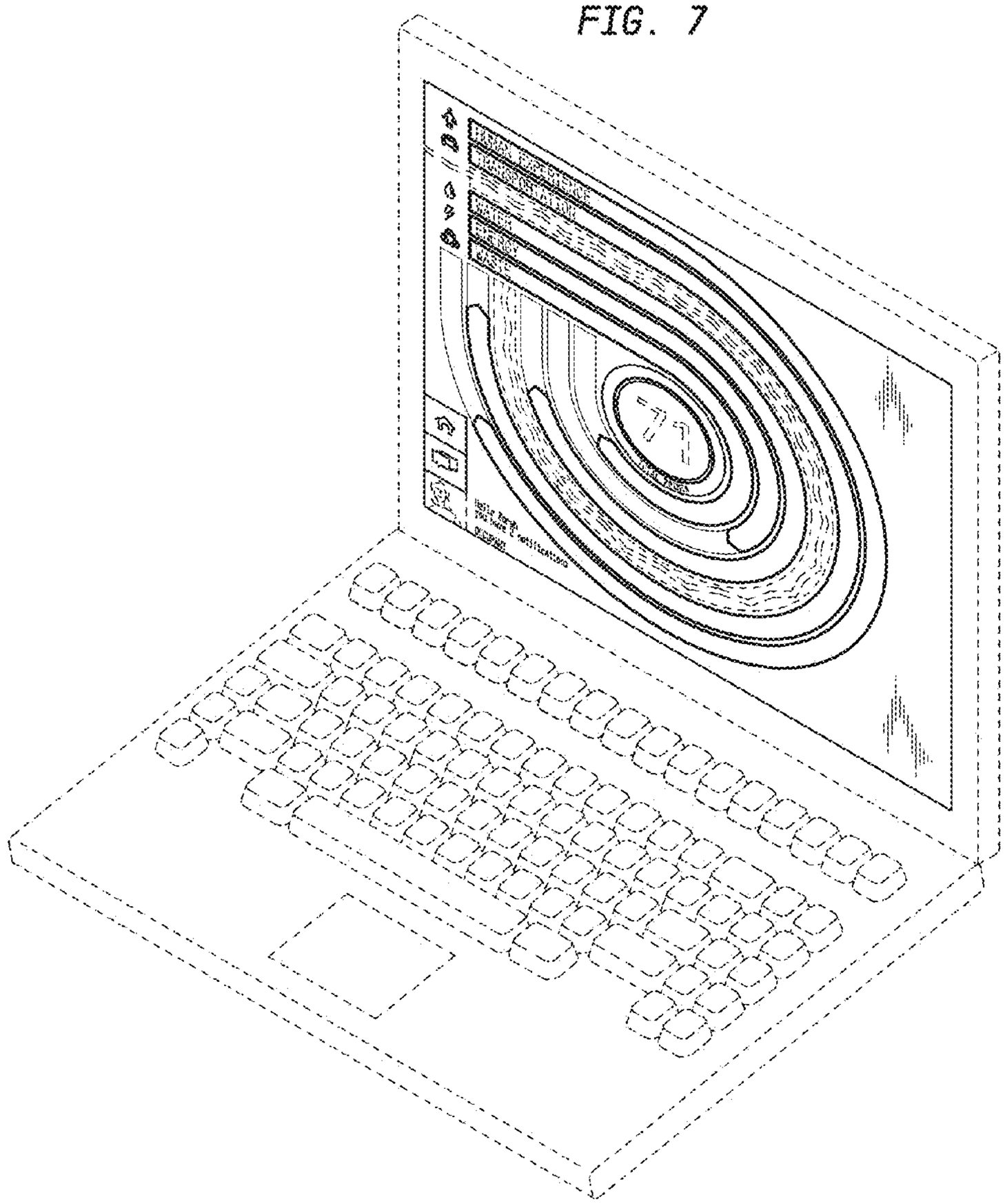

FIG. 8

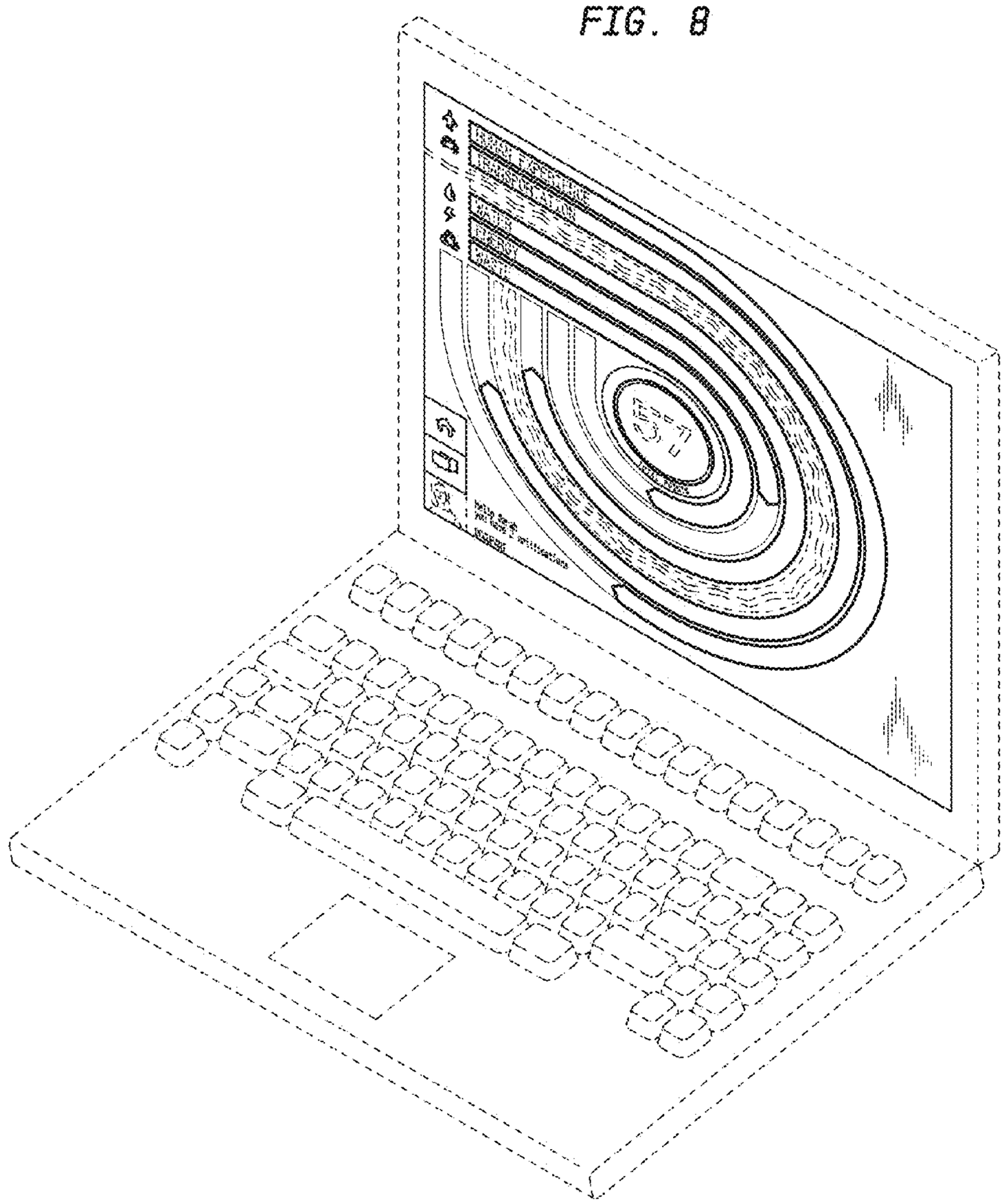

FIG. 9

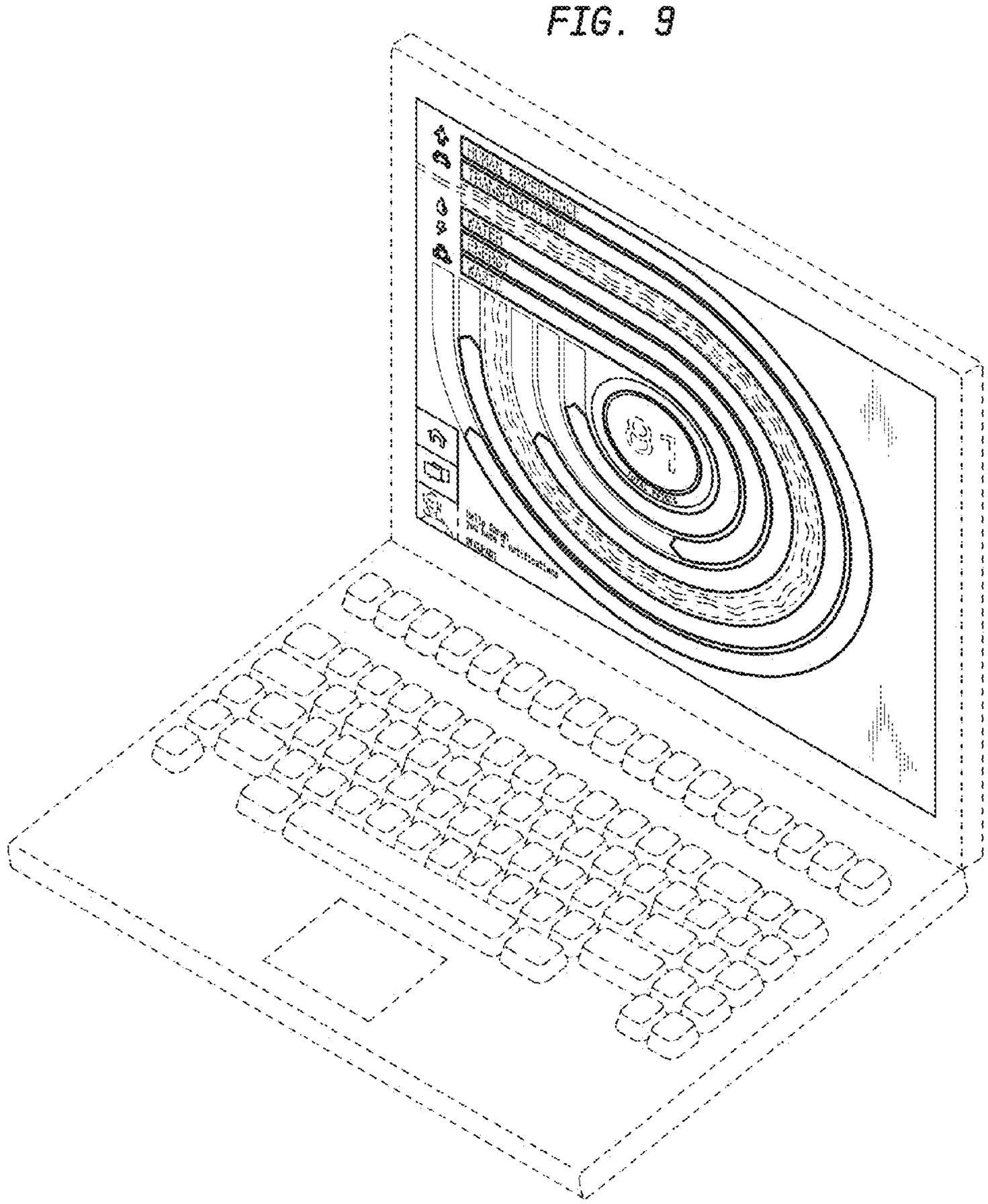

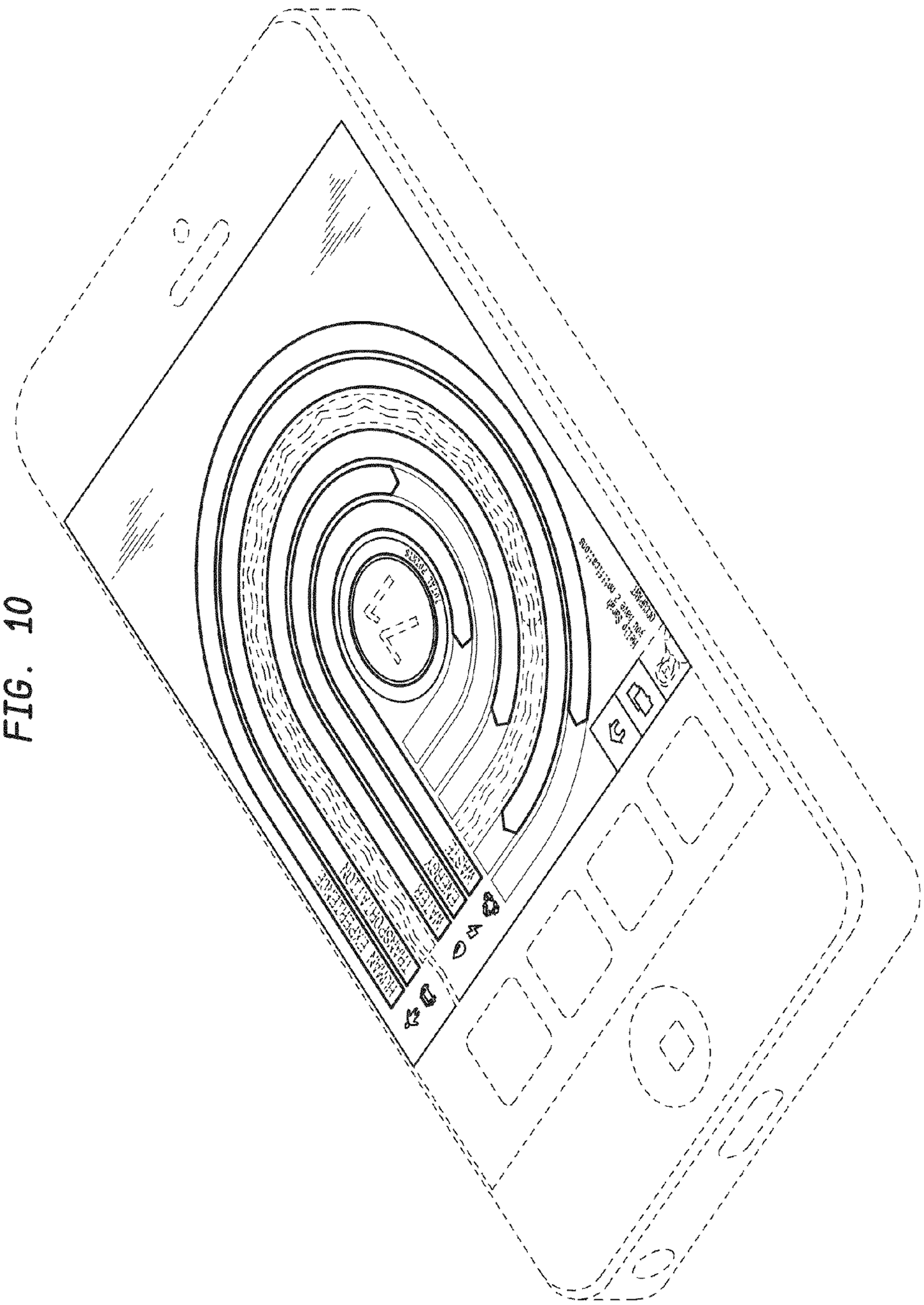

FIG. 10

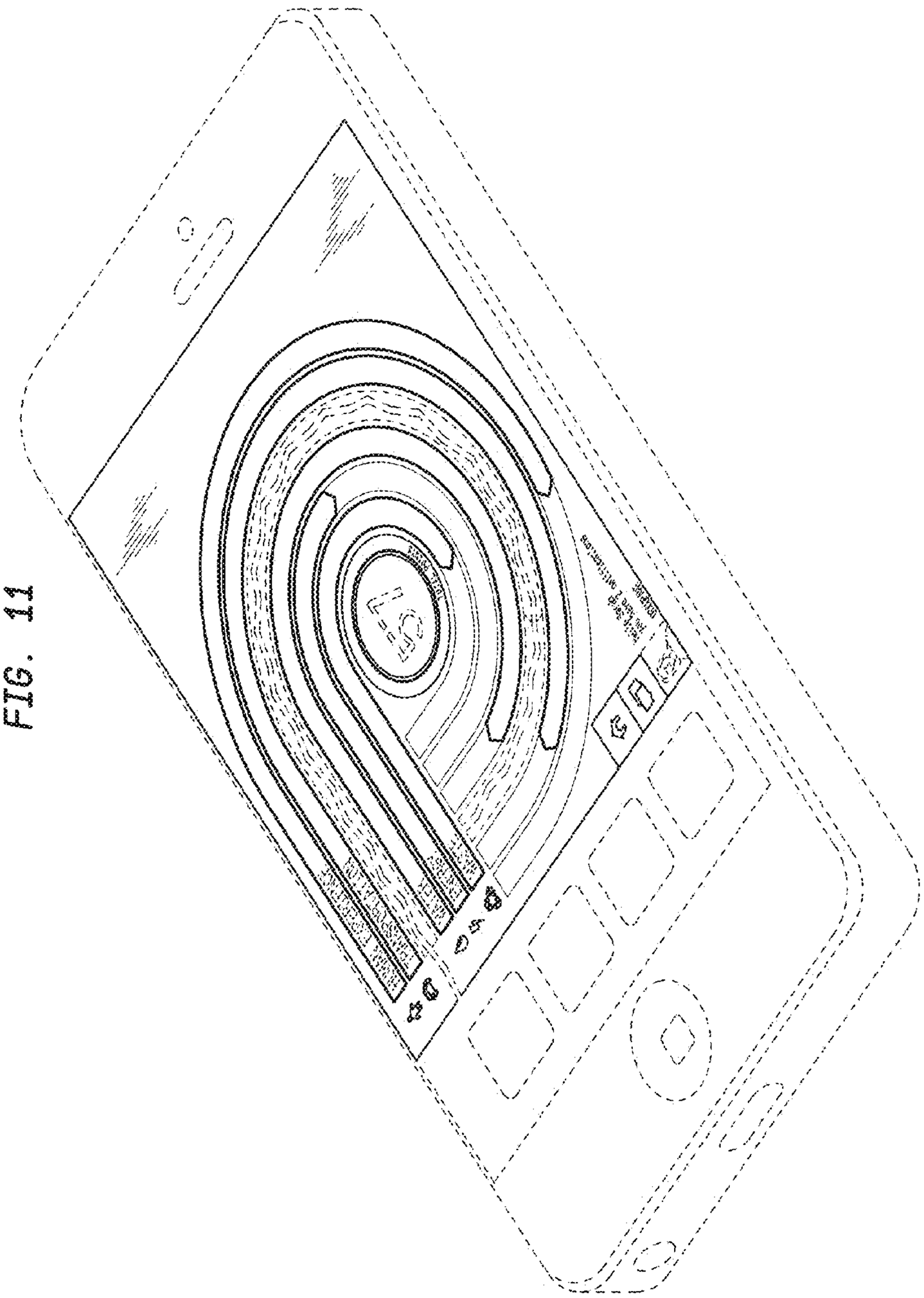

FIG. 11

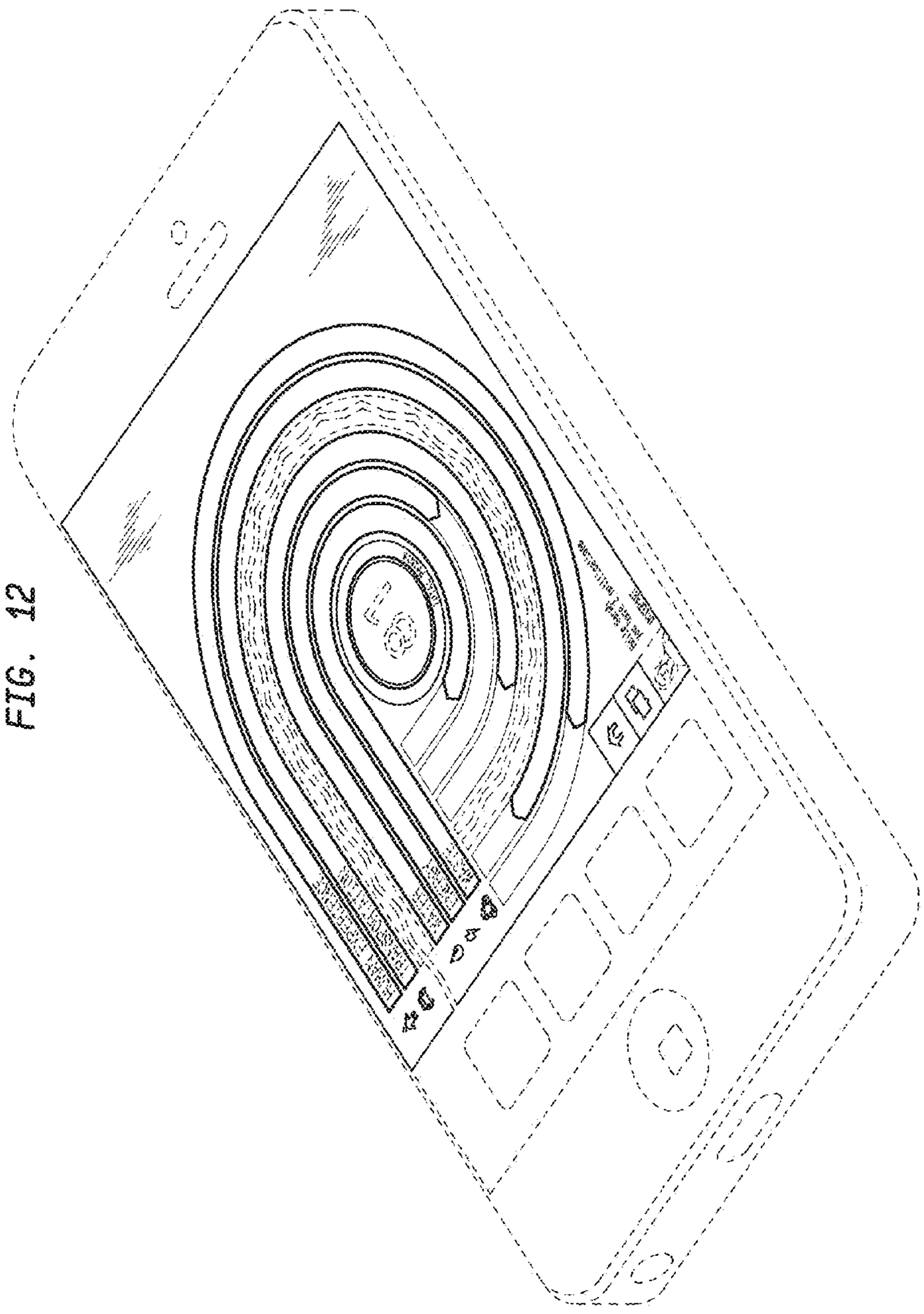

FIG. 12

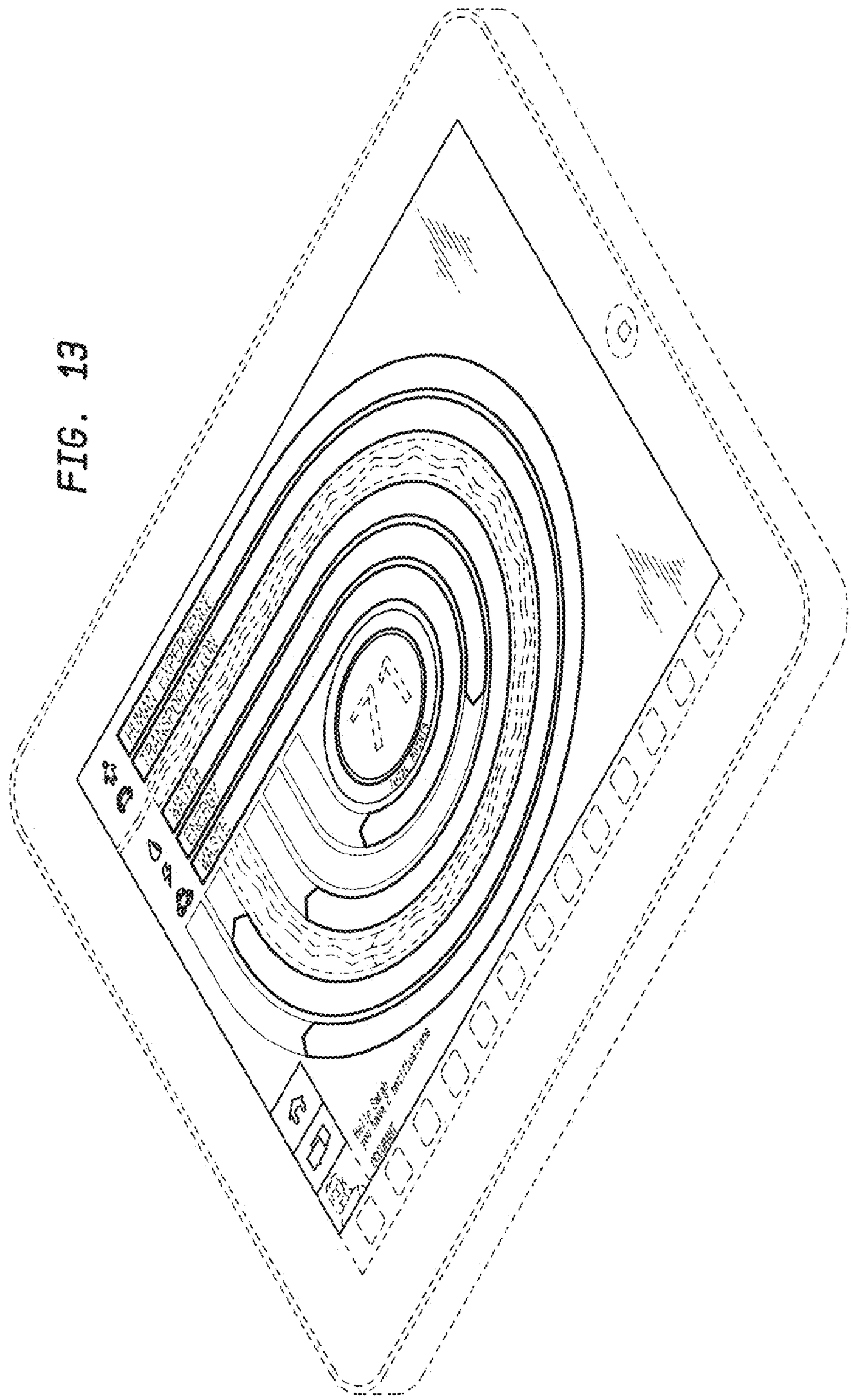

FIG. 13

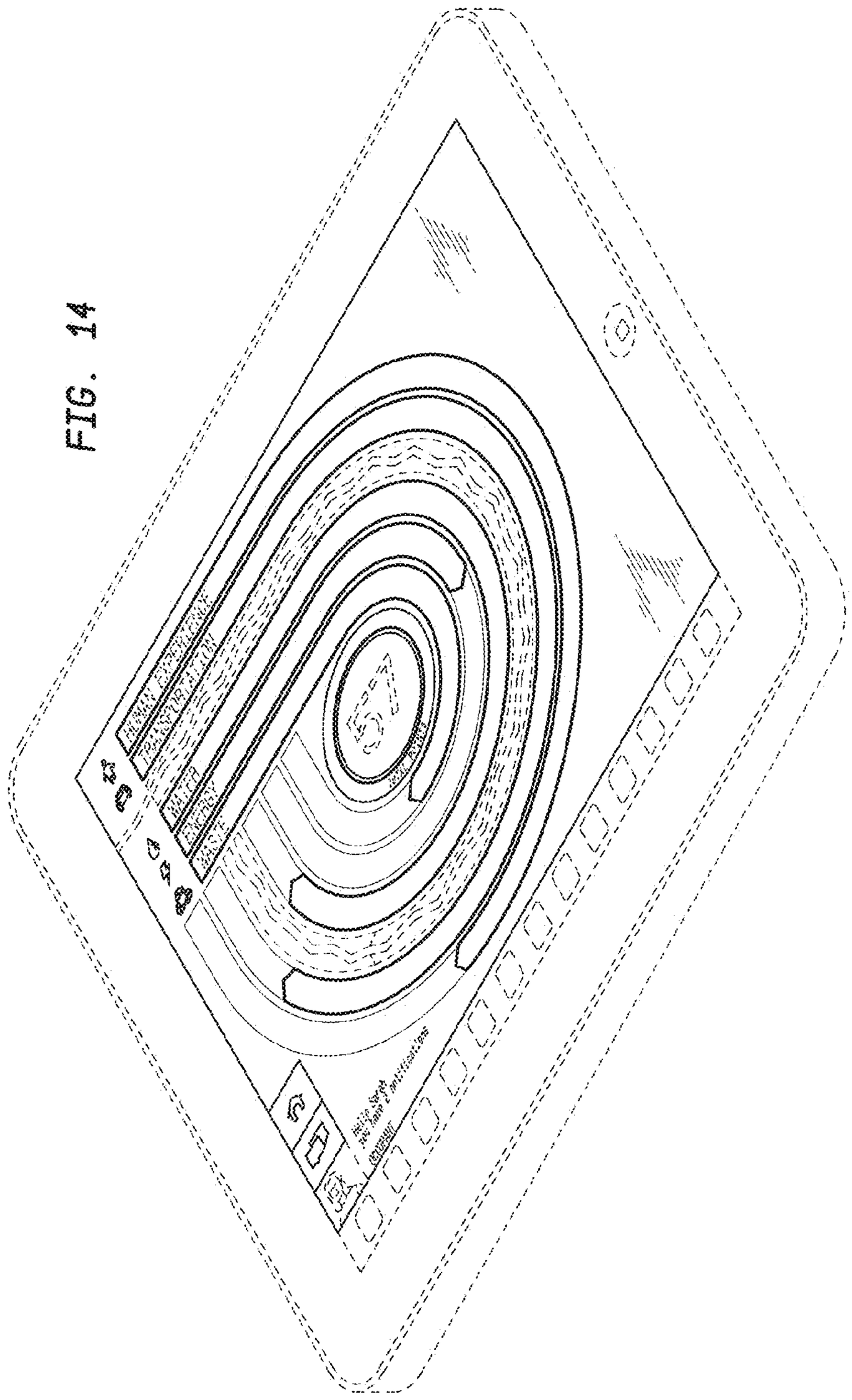

FIG. 14

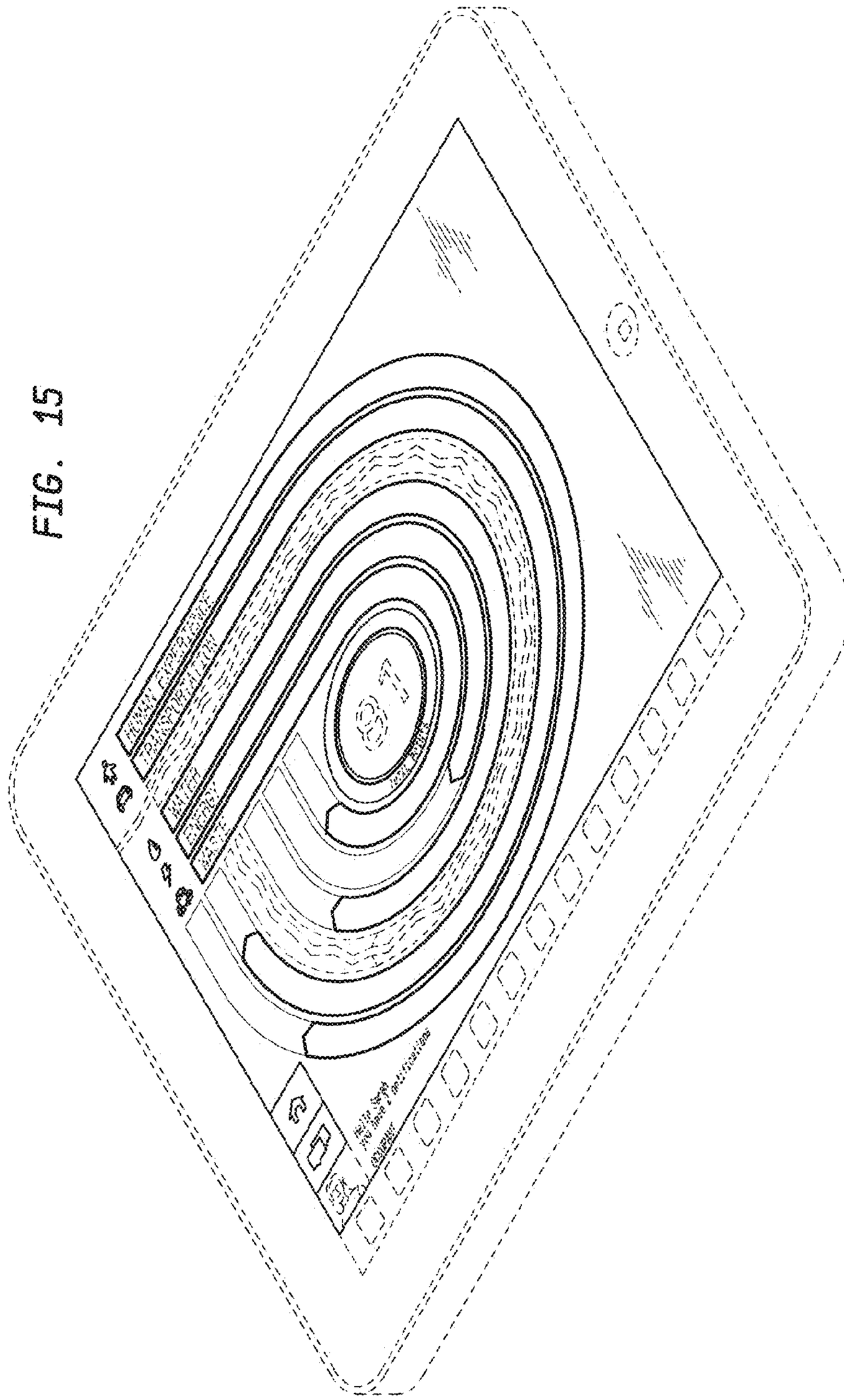
HUMAN EXPERIENCE
TRANSPORTATION
WATER
ENERGY
HEALTH
FOOD
CONSUMER

FIG. 15