US00D720046S

(12) United States Design Patent

Morodomi et al.

(10) Patent No.: US D720,046 S
(45) Date of Patent: ** Dec. 23, 2014

(54) **ELECTROMAGNETIC VALVE**

(71) Applicants: **Yoichi Morodomi**, Tsukubamirai (JP); **Shinji Miyazoe**, Tsukubamirai (JP)

(72) Inventors: **Yoichi Morodomi**, Tsukubamirai (JP); **Shinji Miyazoe**, Tsukubamirai (JP)

(73) Assignee: **SMC Corporation**, Chiyoda-ku, Tokyo (JP)

(**) Term: **14 Years**

(21) Appl. No.: **29/484,085**

(22) Filed: **Mar. 6, 2014**

(30) **Foreign Application Priority Data**

Sep. 30, 2013 (JP) 2013-022778

(51) **LOC (10) Cl.** **23-01**

(52) **U.S. Cl.**
USPC **D23/233**

(58) **Field of Classification Search**
CPC F16K 31/0655; F16K 31/0675; F16K 31/0658; F16K 31/06; H01F 7/081
USPC D23/233, 234–237; 137/625.64, 85, 137/909; 123/406.69; 251/129.01, 129.11, 251/129.15, 149.8
See application file for complete search history.

(56) **References Cited**

U.S. PATENT DOCUMENTS

D415,256 S * 10/1999 Hayashi et al. D23/233
D416,309 S * 11/1999 Hayashi et al. D23/233
D416,980 S * 11/1999 Sato et al. D23/233
D419,216 S * 1/2000 Sato et al. D23/233
D443,030 S * 5/2001 Kaneko et al. D23/233
D459,441 S * 6/2002 Hayashi et al. D23/233
D460,148 S * 7/2002 Hayashi et al. D23/233
D533,254 S * 12/2006 Miyazoe et al. D23/233
D533,255 S * 12/2006 Miyazoe et al. D23/233
D544,578 S * 6/2007 Matsumoto et al. D23/233
D544,581 S * 6/2007 Matsumoto et al. D23/233
D546,420 S * 7/2007 Matsumoto et al. D23/233
7,316,244 B2 * 1/2008 Miyazoe et al. 137/625.64
D563,506 S * 3/2008 Kato et al. D23/233
D563,508 S * 3/2008 Yoshimura et al. D23/233
D563,509 S * 3/2008 Kato D23/233
D563,516 S * 3/2008 Mita et al. D23/233
D563,517 S * 3/2008 Miyazoe et al. D23/233
D563,518 S * 3/2008 Miyazoe et al. D23/233
D563,519 S * 3/2008 Miyazoe et al. D23/233
D563,520 S * 3/2008 Miyazoe et al. D23/233
D563,521 S * 3/2008 Miyazoe et al. D23/233
D563,522 S * 3/2008 Miyazoe et al. D23/233
D563,523 S * 3/2008 Matsumoto et al. D23/233
D564,072 S * 3/2008 Yoshimura et al. D23/233
D564,627 S * 3/2008 Miyazoe et al. D23/233

(Continued)

Primary Examiner — Cynthia Ramirez
Assistant Examiner — Gino Colan
(74) *Attorney, Agent, or Firm* — Yokoi & Co., U.S.A., Inc.; Toshiyuki Yokoi

(57) **CLAIM**

The ornamental design for an electromagnetic valve, as shown and described.

DESCRIPTION

FIG. **1** shows a front view of an electromagnetic valve showing our new design;
FIG. **2** shows a rear view thereof;
FIG. **3** shows a right side view thereof;
FIG. **4** shows a left side view thereof;
FIG. **5** shows a top view thereof;
FIG. **6** shows a bottom view thereof;
FIG. **7** shows a top, front and left side perspective view thereof; and,
FIG. **8** shows a bottom, rear and right side perspective view thereof.
The portions of the design shown in broken lines in FIGS. **1-8** are for the purpose of illustrating the environment only and form no part of the claimed design.

1 Claim, 4 Drawing Sheets

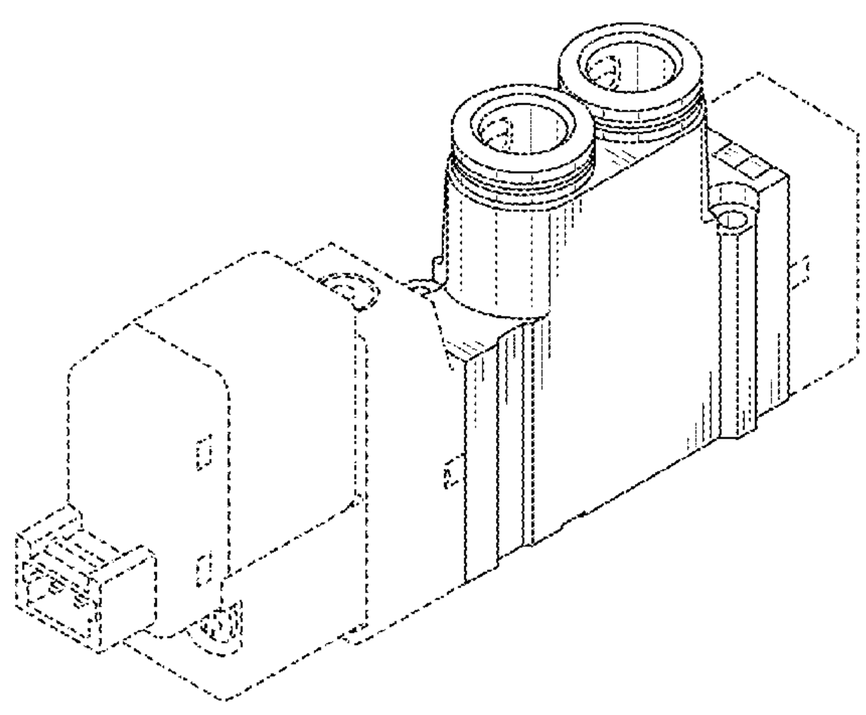

(56) **References Cited**

U.S. PATENT DOCUMENTS

D564,628	S	*	3/2008	Miyazoe et al.	D23/233
D564,629	S	*	3/2008	Miyazoe et al.	D23/233
D564,630	S	*	3/2008	Miyazoe et al.	D23/233
D564,631	S	*	3/2008	Miyazoe et al.	D23/233
D572,344	S	*	7/2008	Kato	D23/233
D574,466	S	*	8/2008	Kato	D23/233
D584,797	S	*	1/2009	Matsumoto et al.	D23/233
D591,829	S	*	5/2009	Miyazoe et al.	D23/233
D594,929	S	*	6/2009	Takakuwa et al.	D23/233
D594,930	S	*	6/2009	Takakuwa et al.	D23/233
D599,887	S	*	9/2009	Matsumoto	D23/233
D599,888	S	*	9/2009	Matsumoto	D23/233
D607,539	S	*	1/2010	Matsumoto	D23/233
D607,540	S	*	1/2010	Matsumoto	D23/233
D621,477	S	*	8/2010	Miyazoe et al.	D23/233
D621,911	S	*	8/2010	Miyazoe et al.	D23/233
D623,270	S	*	9/2010	Fukano et al.	D23/233
D636,460	S	*	4/2011	Hayashi	D23/233
D639,393	S	*	6/2011	Hayashi	D23/233
D653,307	S	*	1/2012	Senba	D23/233
D653,308	S	*	1/2012	Senba	D23/233
D665,874	S	*	8/2012	Senba	D23/233
D668,321	S	*	10/2012	Senba	D23/233
D693,431	S	*	11/2013	Tamura et al.	D23/233
D694,363	S	*	11/2013	Narita	D23/233
D694,364	S	*	11/2013	Narita	D23/233
D694,365	S	*	11/2013	Narita	D23/233
D694,858	S	*	12/2013	Narita	D23/233
D698,418	S	*	1/2014	Narita	D23/233
D698,419	S	*	1/2014	Narita	D23/233
D698,899	S	*	2/2014	Narita	D23/233
D698,900	S	*	2/2014	Narita	D23/233

* cited by examiner

FIG. 1

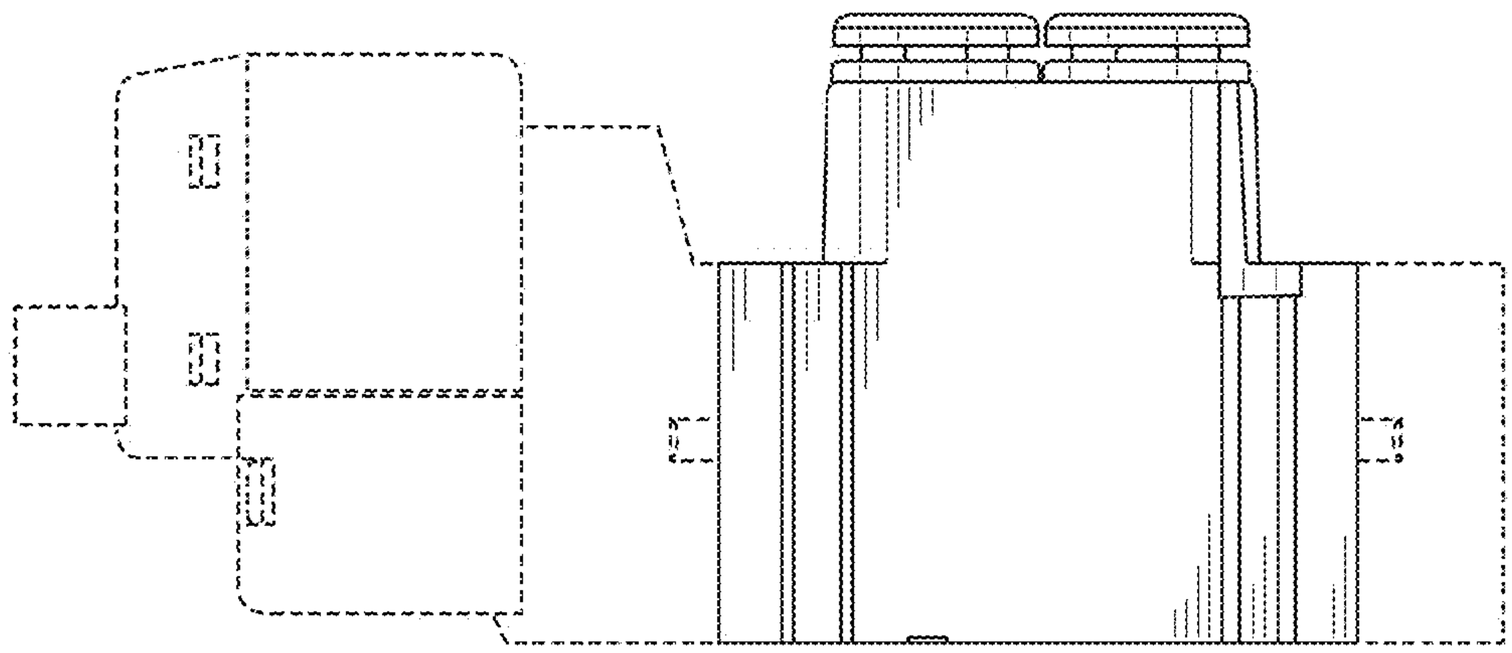

FIG. 2

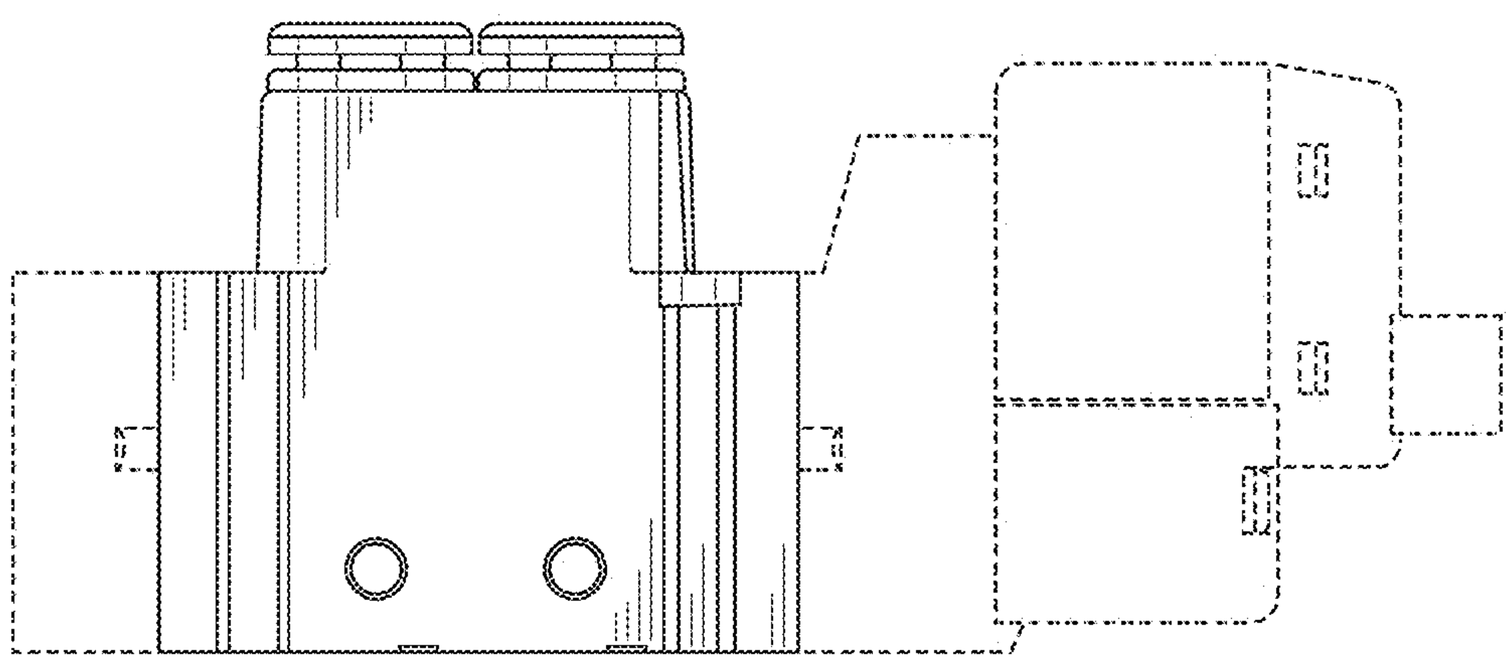

FIG. 3

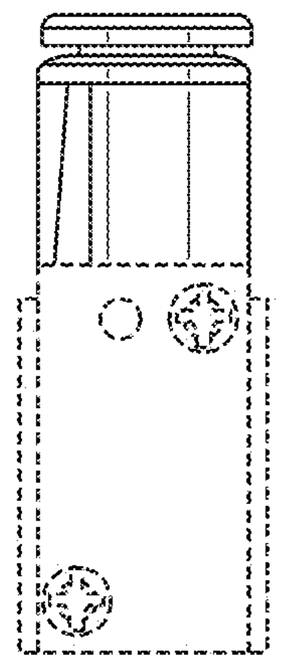

FIG. 4

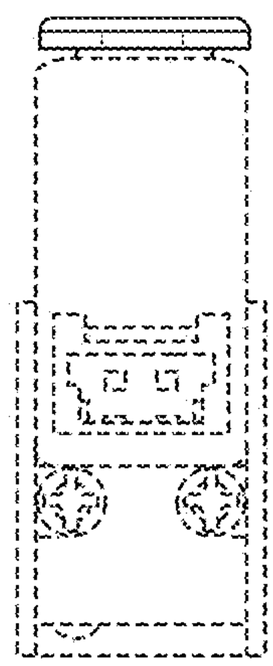

FIG. 5

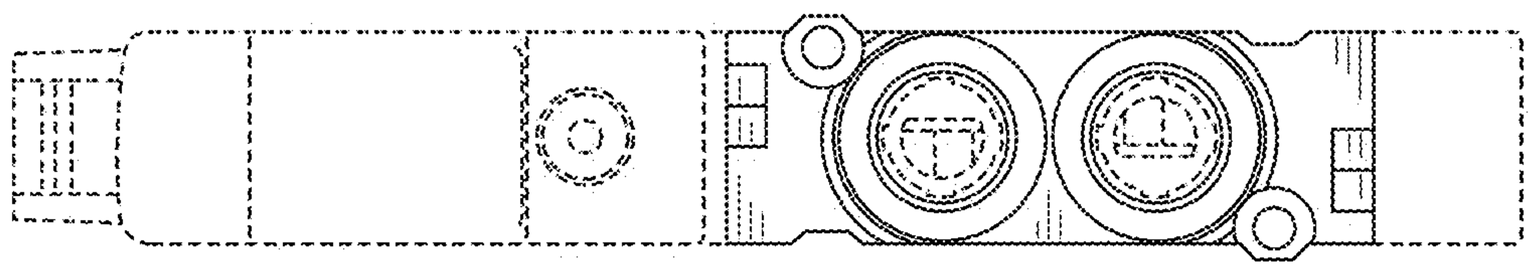

FIG. 6

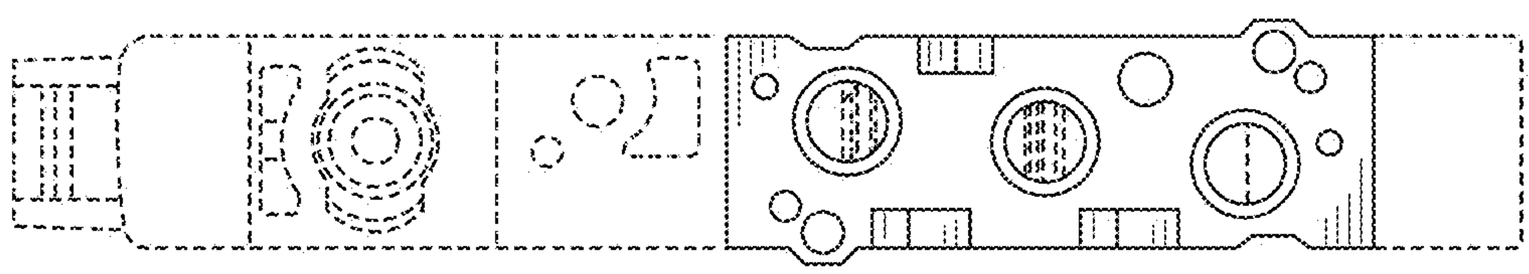

FIG. 7

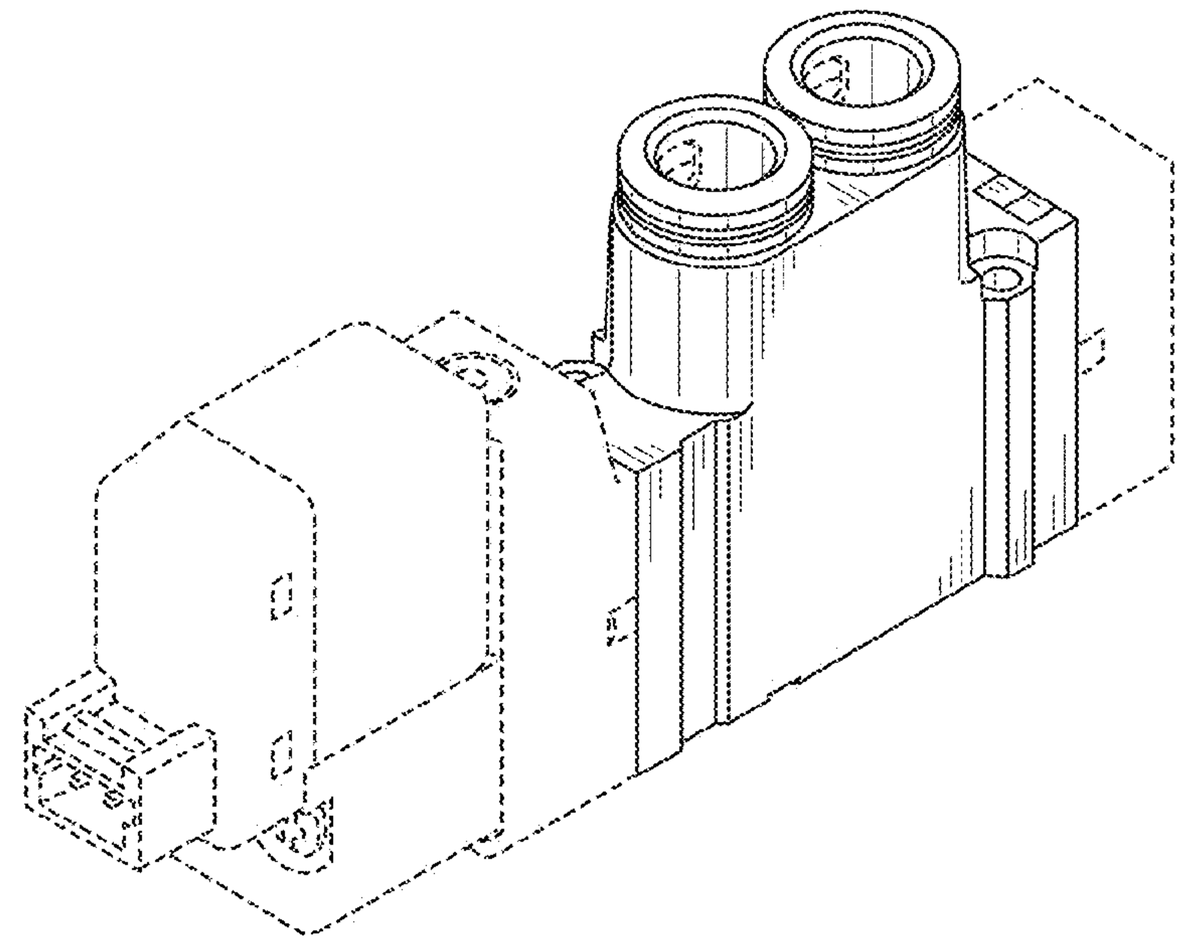
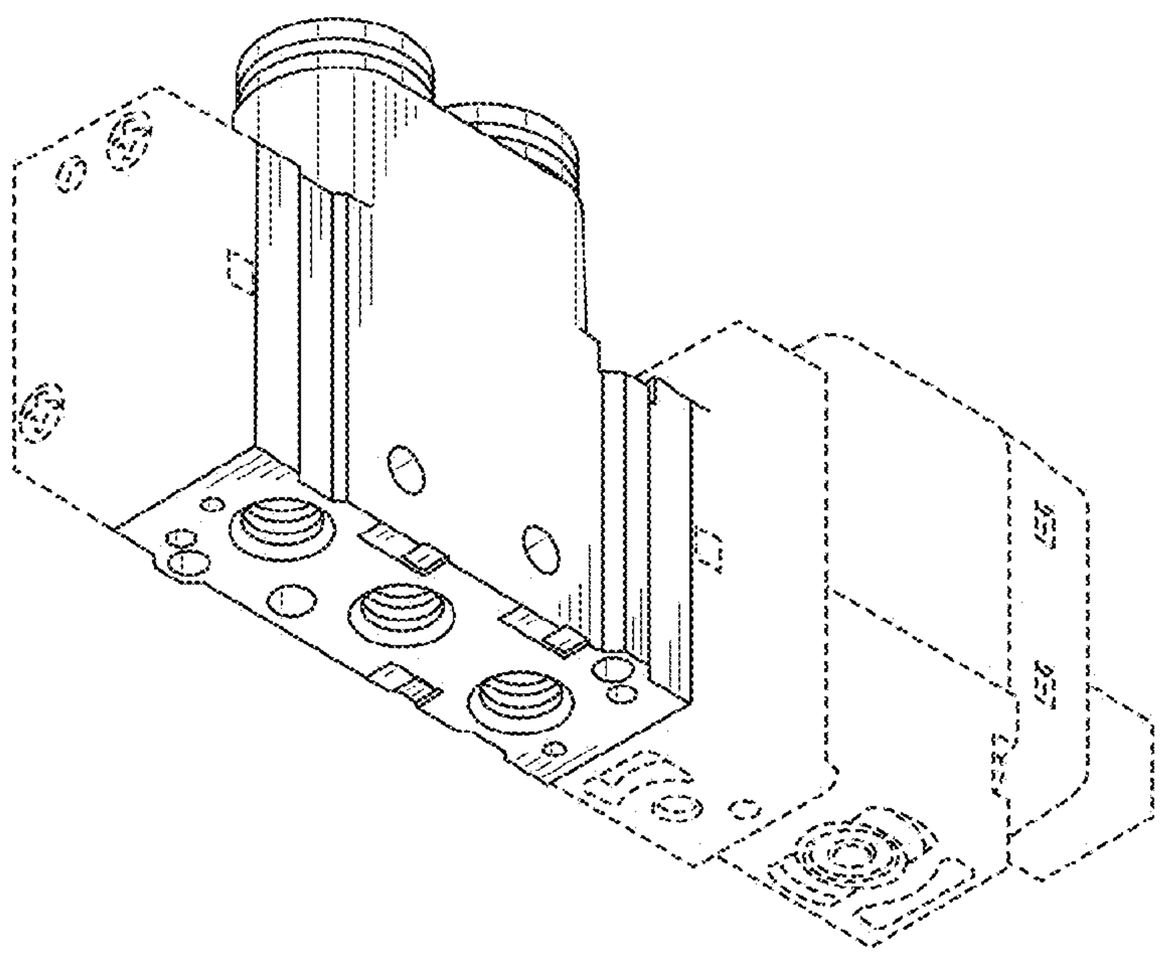
FIG. 8