US00D719708S

(12) United States Design Patent
Ye

(10) Patent No.: US D719,708 S
(45) Date of Patent: ** Dec. 16, 2014

(54) **PROGRAMMABLE TRAINING REMOTE**

(71) Applicant: **Ying Ye**, Maidenhead (GB)

(72) Inventor: **Ying Ye**, Maidenhead (GB)

(**) Term: **14 Years**

(21) Appl. No.: **29/488,119**

(22) Filed: **Apr. 16, 2014**

(51) **LOC (10) Cl.** **30-99**

(52) **U.S. Cl.**
USPC **D30/199**; D10/104.1

(58) **Field of Classification Search**
CPC A01K 15/21; A01K 15/22; A01K 15/23; A01K 15/04; A01K 11/006; A01K 27/001; A01K 27/009; H04N 5/4403
USPC ..... D30/144, 145, 151, 152, 155, 199; D10/104.1, 104.2; D13/168; D14/137, D14/138 AB, 155, 159, 218, 247; 119/712, 119/718, 719, 720, 721, 856, 858, 859, 860, 119/863; 340/573.1, 573.3, 573.4
See application file for complete search history.

(56) **References Cited**

U.S. PATENT DOCUMENTS

6,167,843	B1 *	1/2001	Kim	119/720
6,549,133	B2 *	4/2003	Duncan et al.	340/573.3
6,598,563	B2 *	7/2003	Kim et al.	119/720
D482,630	S *	11/2003	So	D30/199
D487,026	S *	2/2004	Fleetwood et al.	D10/104.1
6,860,240	B2 *	3/2005	Kim et al.	119/719
7,111,586	B2 *	9/2006	Lee et al.	119/719
D533,845	S *	12/2006	Lay	D13/168
D535,902	S *	1/2007	Kaufman et al.	D30/199
D535,973	S *	1/2007	Goetzl et al.	D14/155
7,607,406	B2 *	10/2009	So	119/719
8,181,607	B2 *	5/2012	Kim	119/720
2004/0206310	A1 *	10/2004	Hutchins	119/720
2007/0012260	A1 *	1/2007	Boyd et al.	119/720
2008/0036610	A1 *	2/2008	Hokuf et al.	340/573.3
2012/0272924	A1 *	11/2012	So	119/720

* cited by examiner

Primary Examiner — Caron D Veynar
Assistant Examiner — Martie K Holtje
(74) *Attorney, Agent, or Firm* — Robinson IP Law, PLLC

(57) **CLAIM**

The ornamental design for a programmable training remote, as shown and described.

DESCRIPTION

FIG. **1** is a top, right front perspective view of the programmable training remote showing my new design;
FIG. **2** is a front elevational view thereof;
FIG. **3** is a rear elevational view thereof;
FIG. **4** is a right side elevational view thereof;
FIG. **5** is a left side elevational view thereof;
FIG. **6** is a top plan view thereof; and,
FIG. **7** is a bottom plan view thereof.

The structural features and indicia depicted by broken lines have been shown for the purpose of illustrating portions of the programmable training remote that form no part of the claimed design.

The thin solid lines in the views have been provided for the purpose of illustrating the uniformity of the planar surfaces and the contour of the curved surfaces and are not a claimed surface pattern.

1 Claim, 4 Drawing Sheets

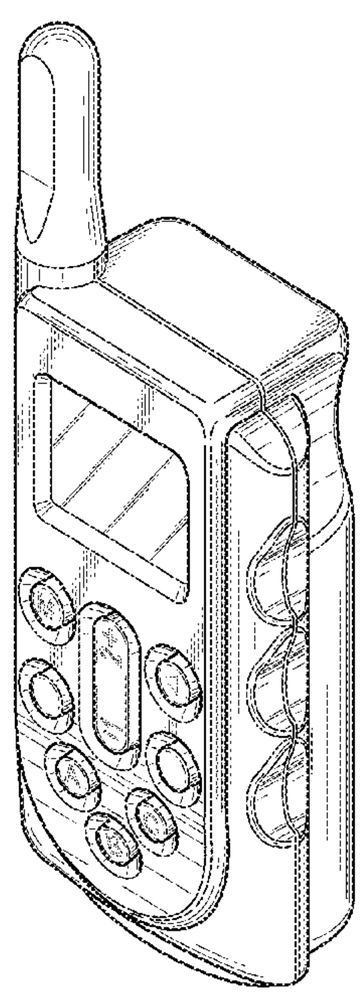

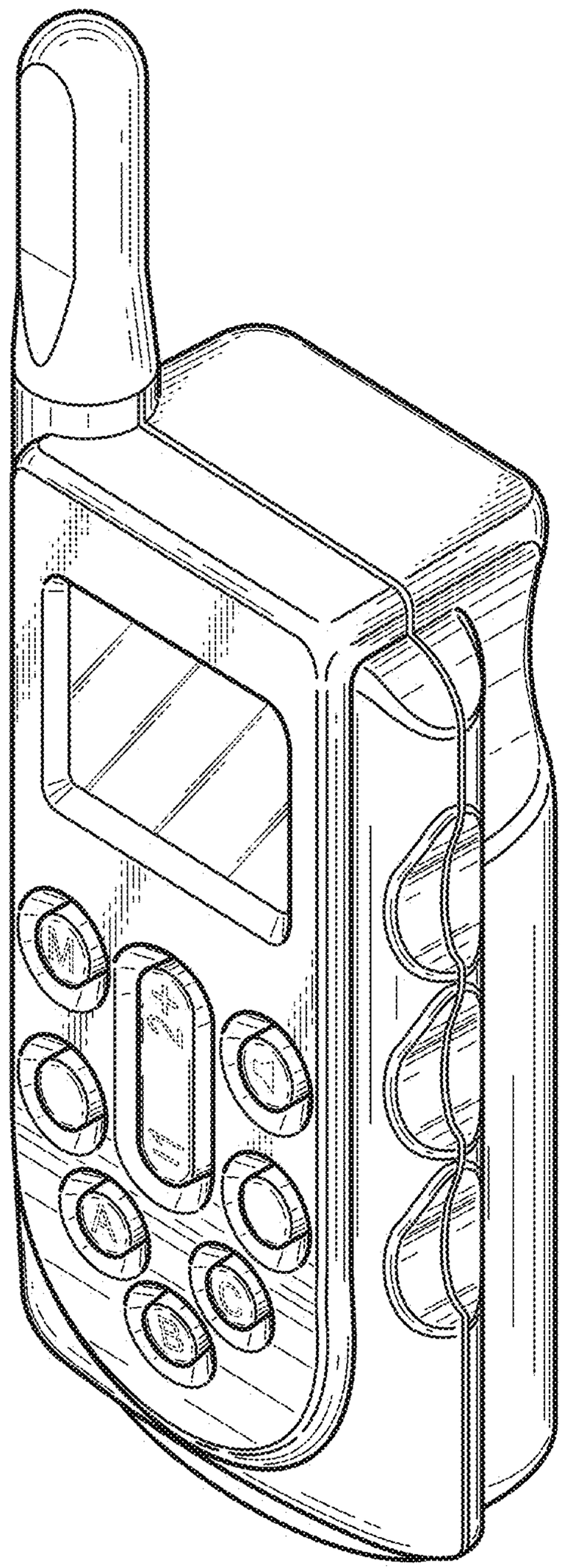

FIG. 1

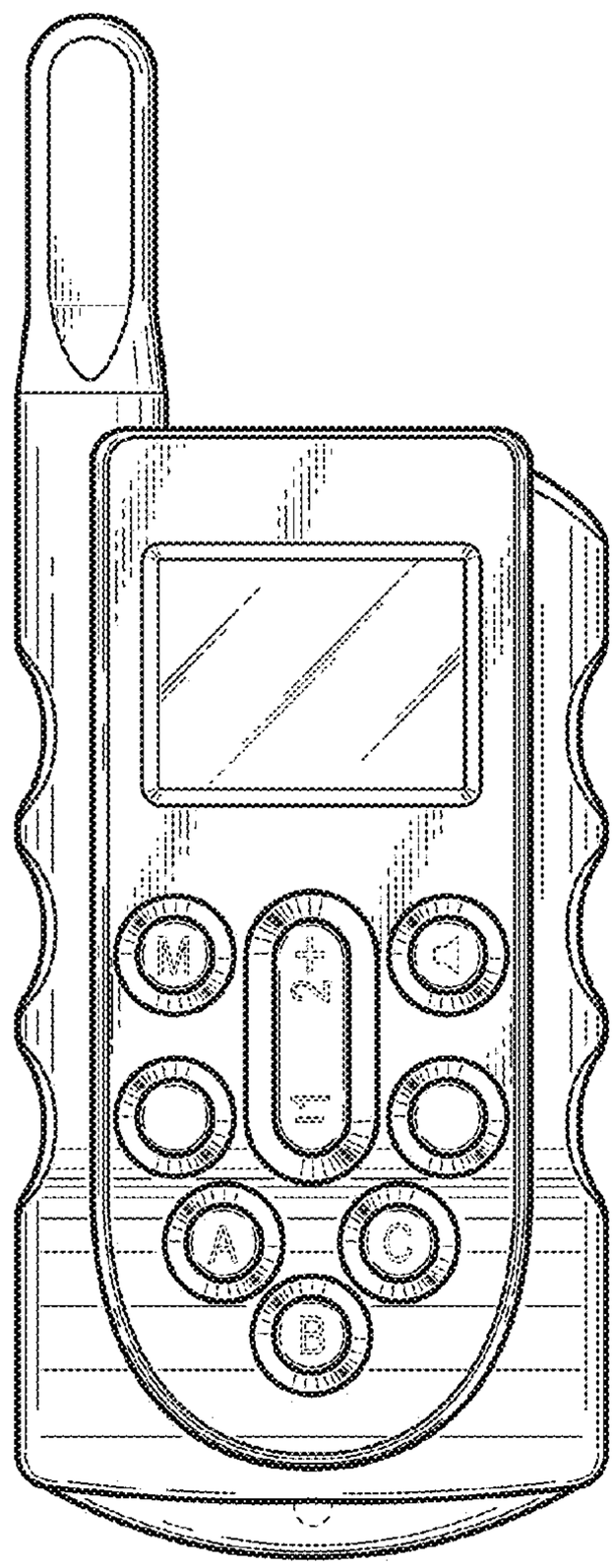

FIG. 2

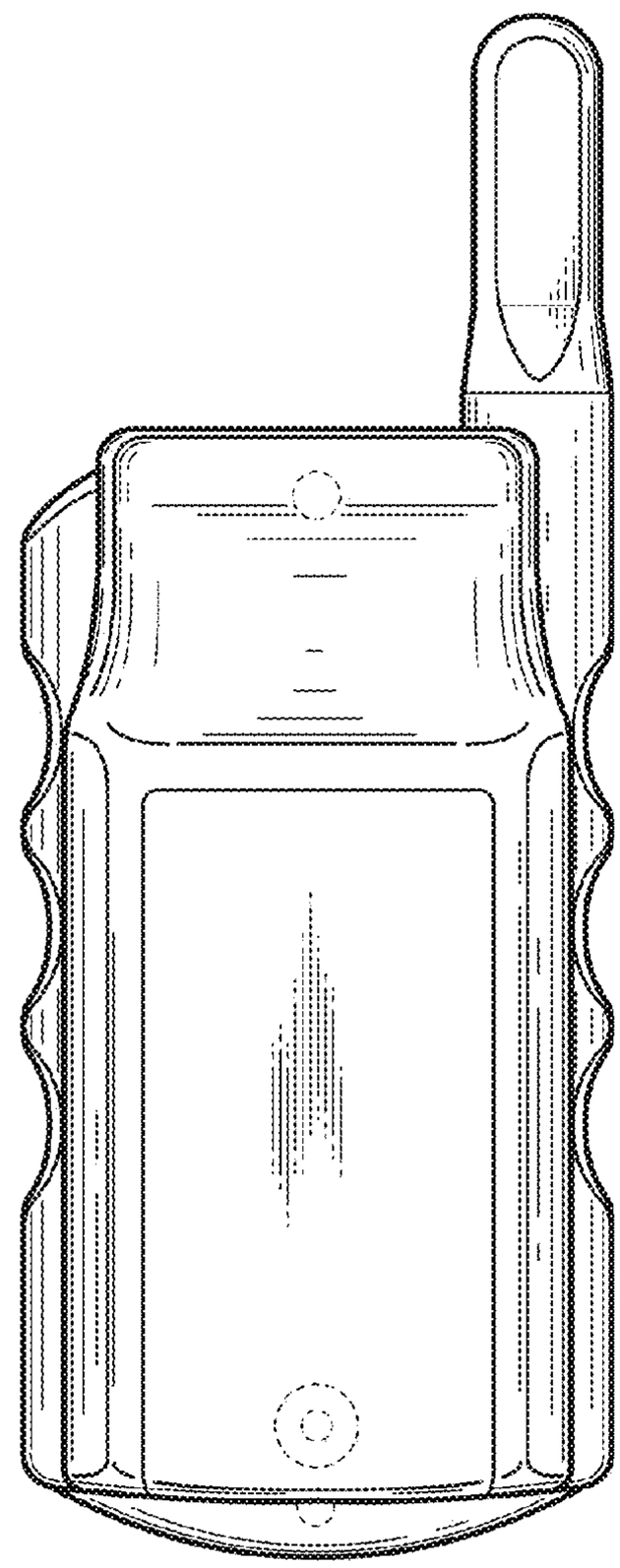

FIG. 3

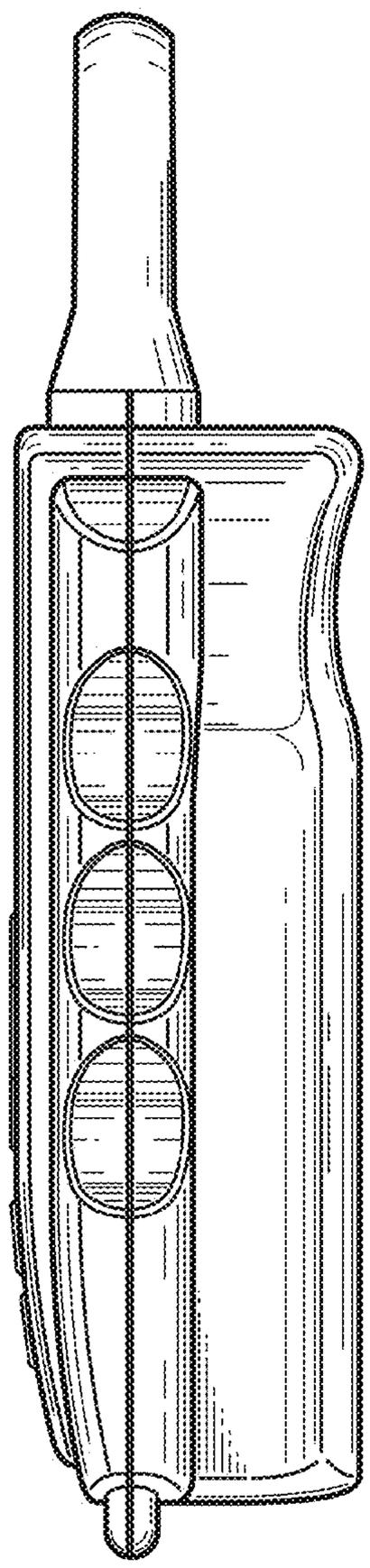

FIG. 4

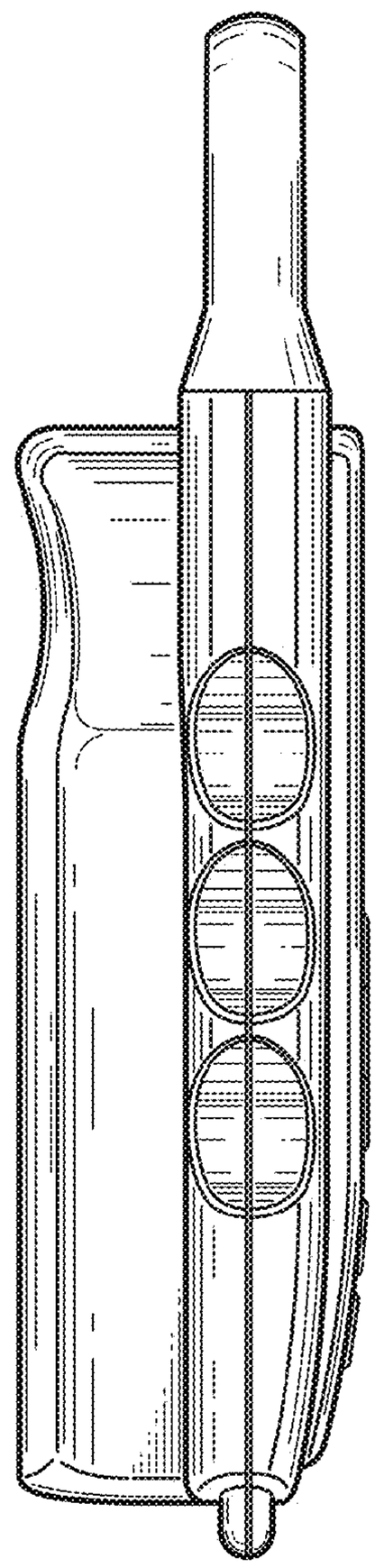

FIG. 5

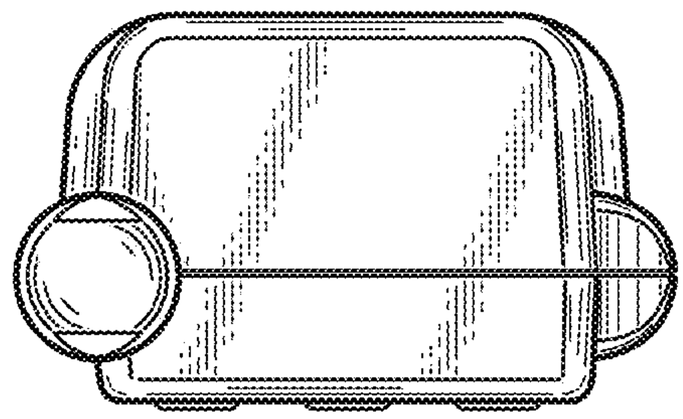

FIG. 6

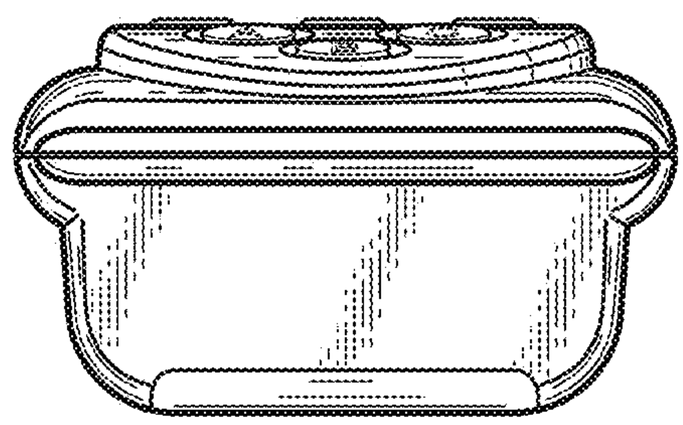

FIG. 7