US00D719614S

(12) United States Design Patent
Baum

(10) **Patent No.: US D719,614 S**
(45) **Date of Patent: ** Dec. 16, 2014**

(54) **GAMEPAD**

(71) Applicant: **David Baum**, Provo, UT (US)

(72) Inventor: **David Baum**, Provo, UT (US)

(73) Assignee: **Bladepad, LLC**, Pleasant Grove, UT (US)

(**) Term: **14 Years**

(21) Appl. No.: **29/477,203**

(22) Filed: **Dec. 19, 2013**

Related U.S. Application Data

(63) Continuation of application No. 29/433,802, filed on Oct. 4, 2012, now Pat. No. Des. 697,140.

(51) **LOC (10) Cl.** **21-01**

(52) **U.S. Cl.**
USPC **D21/333**; D14/401

(58) **Field of Classification Search**
USPC ..... D14/399–401, 412–416; D21/324, 333; 273/148 B; 463/1, 29–39, 46, 47; 345/156–161, 905
See application file for complete search history.

(56) **References Cited**

U.S. PATENT DOCUMENTS

5,785,317	A *	7/1998	Sasaki	273/148 B
5,923,317	A *	7/1999	Sayler et al.	345/156
6,225,975	B1 *	5/2001	Furuki et al.	345/156
6,743,100	B1 *	6/2004	Neiser	463/37
D568,883	S *	5/2008	Ashida et al.	D14/400
D570,349	S *	6/2008	Ashida et al.	D14/400
7,762,553	B2 *	7/2010	Harris	273/148 B
D620,939	S *	8/2010	Suetake et al.	D14/401
D636,773	S *	4/2011	Lin	D14/401
D648,324	S *	11/2011	Medas	D14/217
D653,292	S *	1/2012	Kotkin et al.	D21/333
D685,434	S *	7/2013	Ali et al.	D21/333

* cited by examiner

Primary Examiner — Prabhakar Deshmukh
(74) *Attorney, Agent, or Firm* — Superior IP, PLLC; Dustin L. Call

(57) **CLAIM**

The ornamental design for a gamepad, as shown and described.

DESCRIPTION

FIG. **1** is a rear view of a gamepad;
FIG. **2** is a bottom view thereof;
FIG. **3** is a bottom front perspective view thereof;
FIG. **4** is a front view thereof;
FIG. **5** is a top front perspective view thereof;
FIG. **6** is a left side view thereof
FIG. **7** is a top rear perspective view thereof;
FIG. **8** is a right side view thereof; and,
FIG. **9** is a top view thereof.
The broken lines showing environment in the drawings are included for illustrative purposes only and form no part of the claimed design.

1 Claim, 5 Drawing Sheets

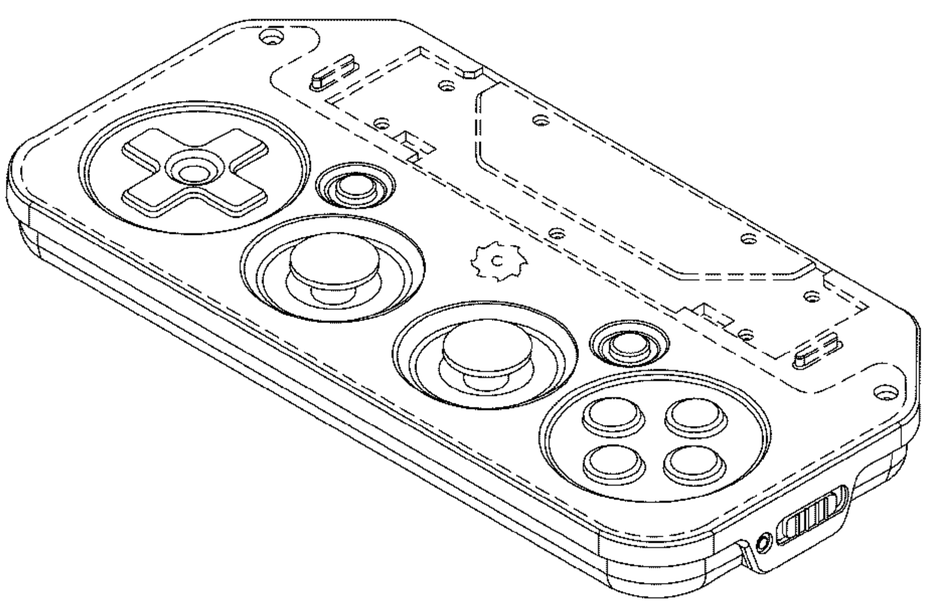

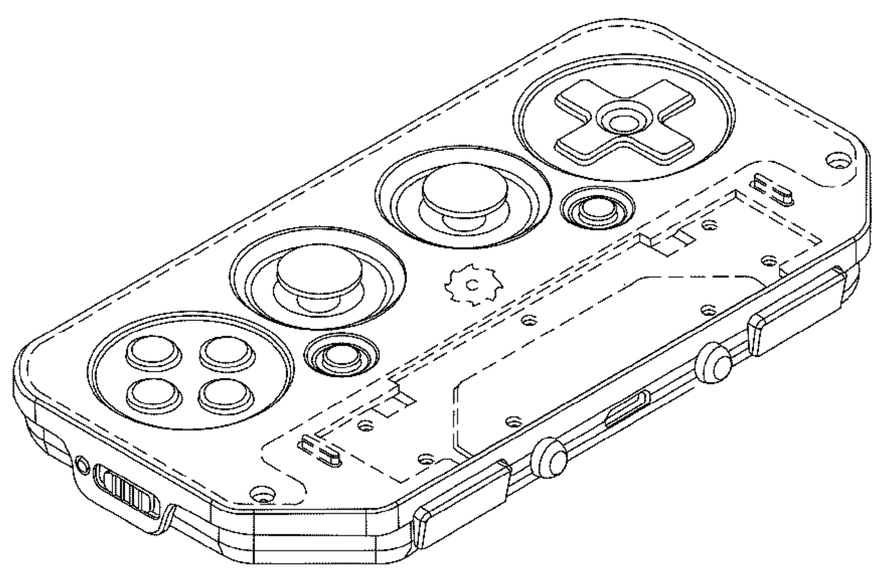

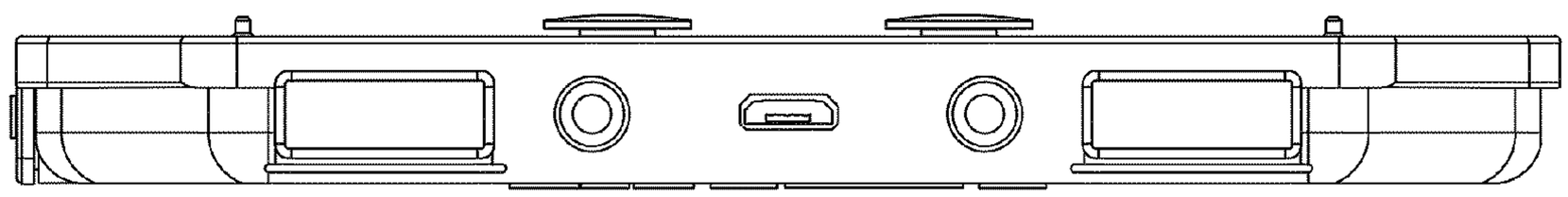

FIG. 1

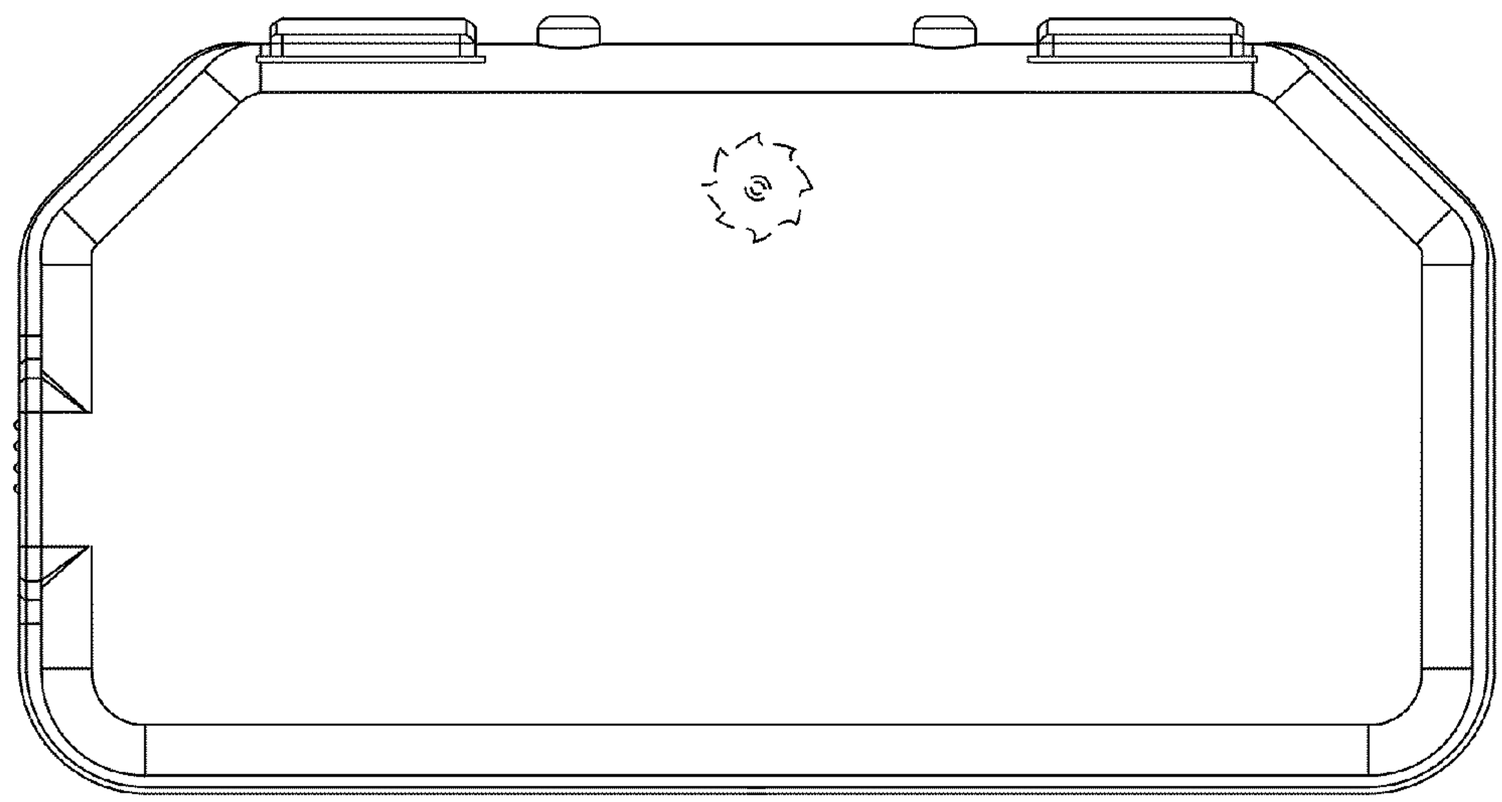

FIG. 2

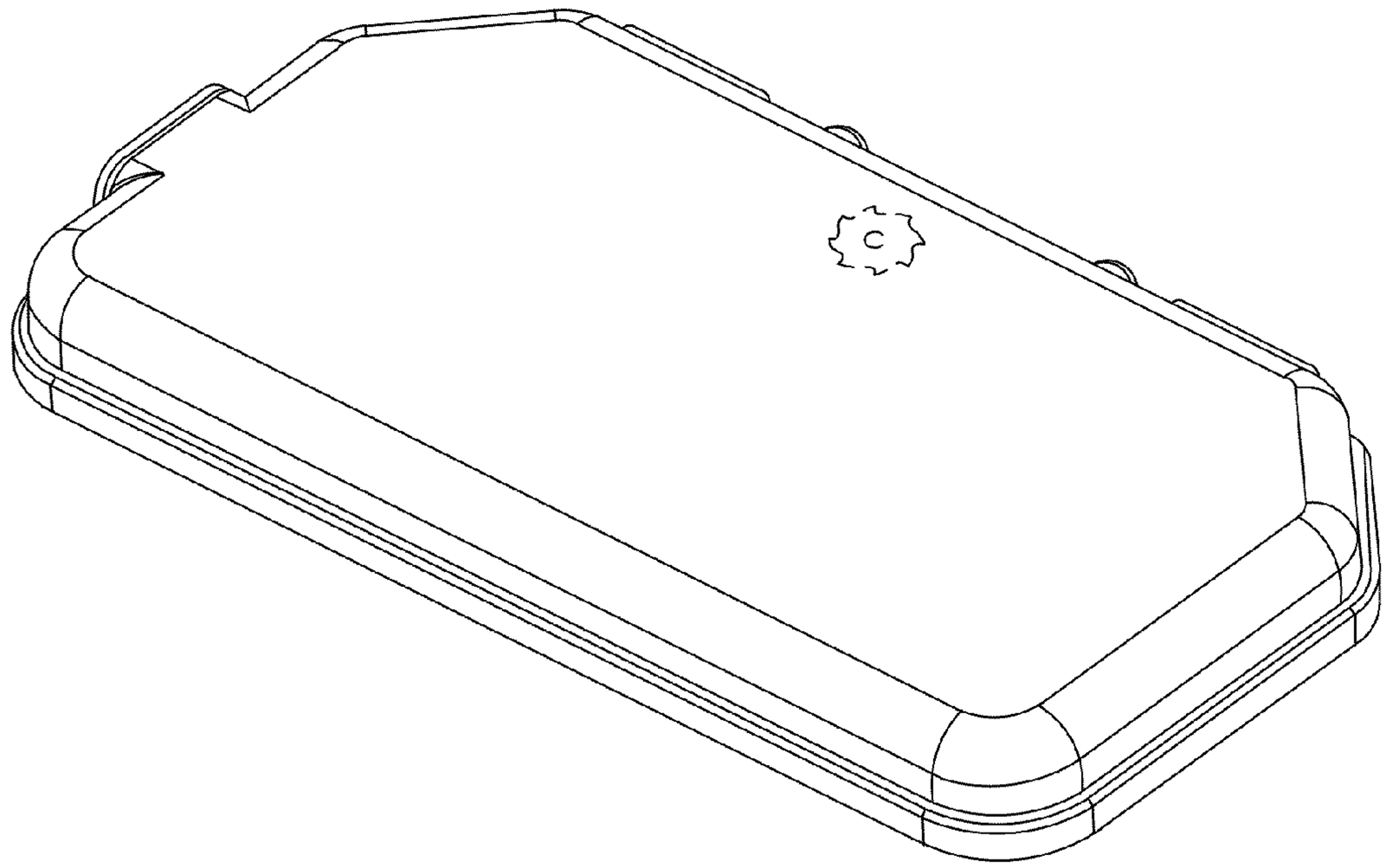

FIG. 3

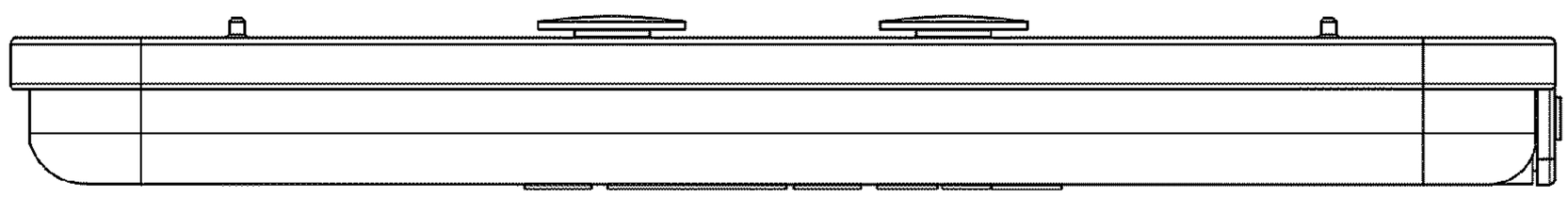

FIG. 4

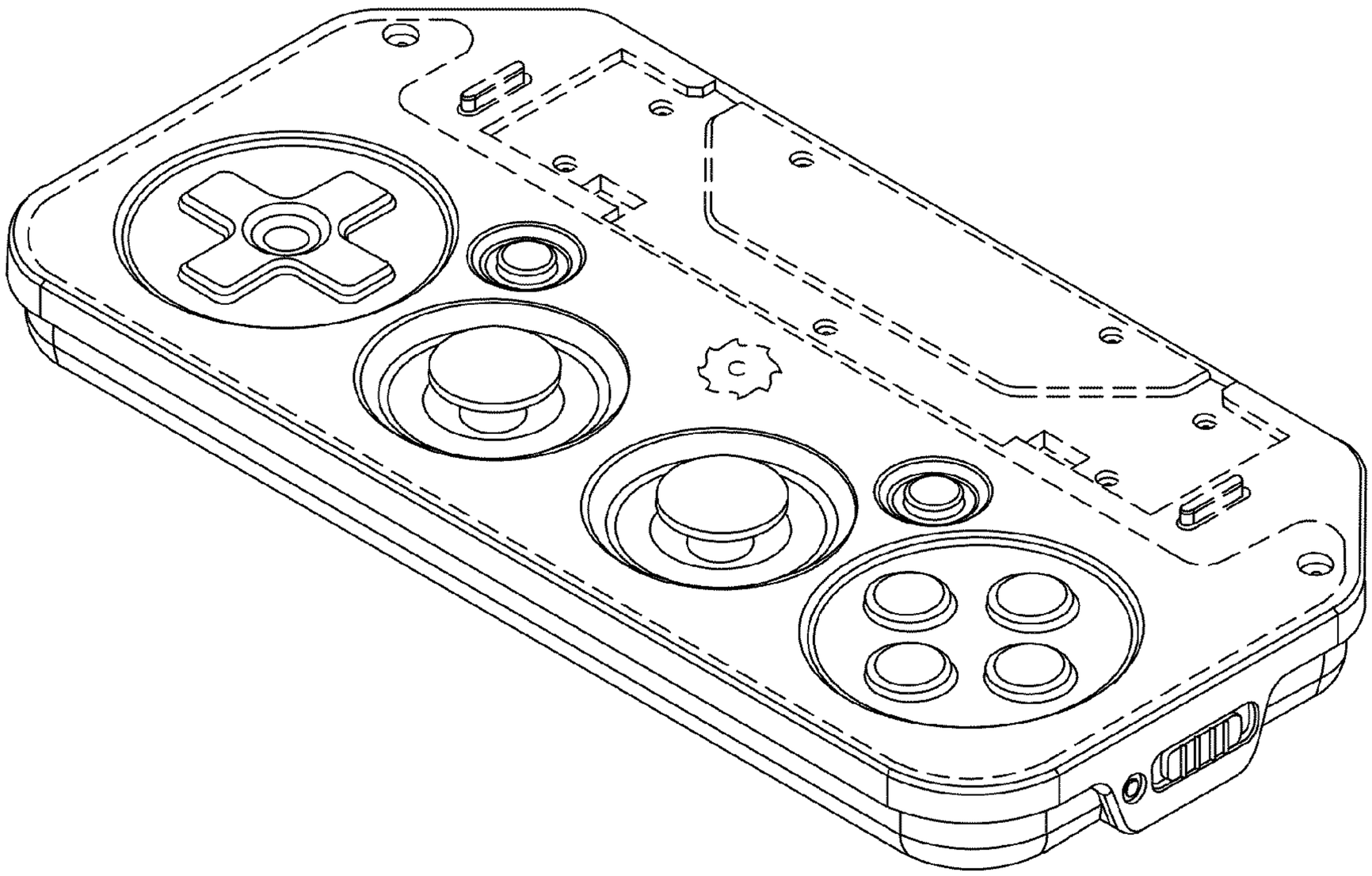

FIG. 5

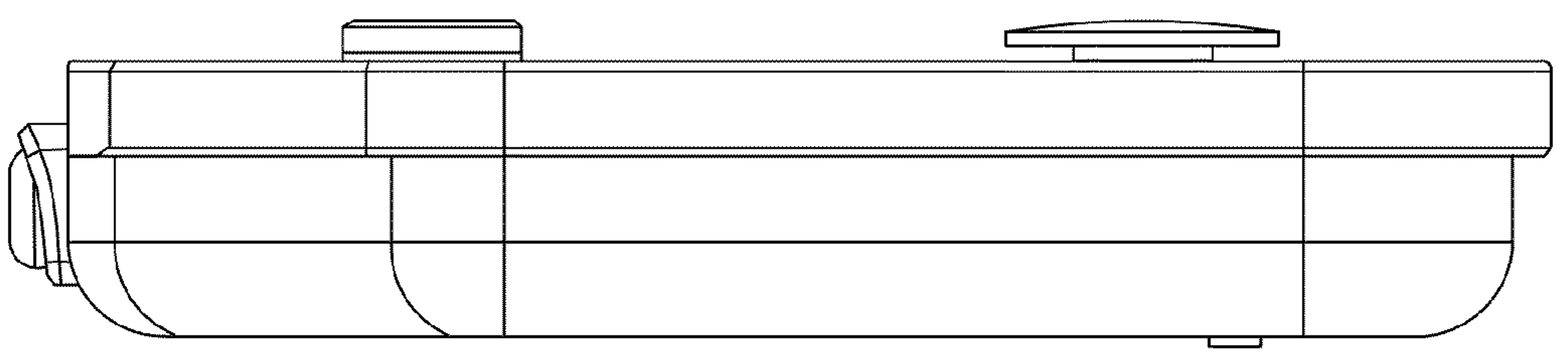

FIG. 6

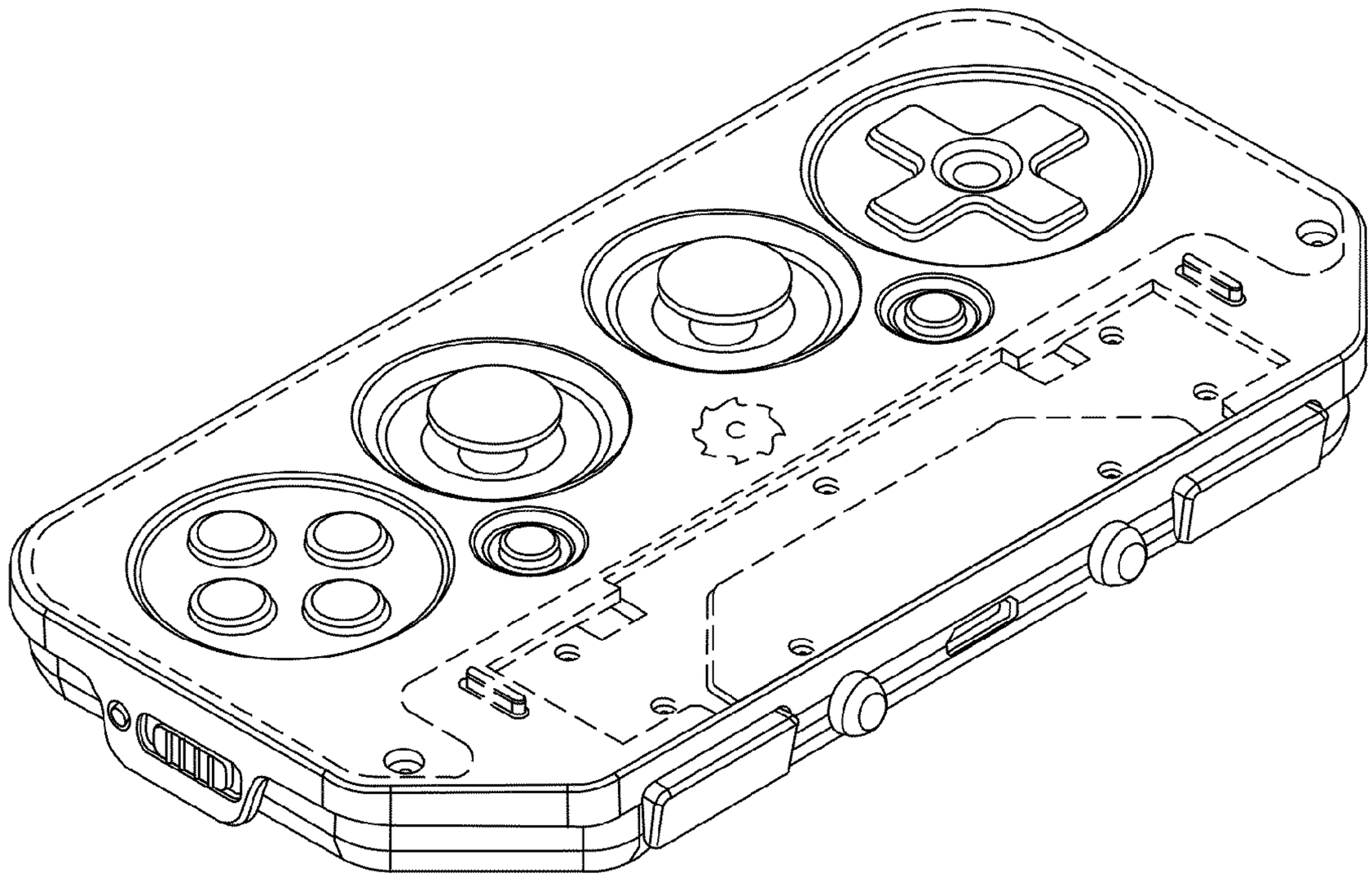

FIG. 7

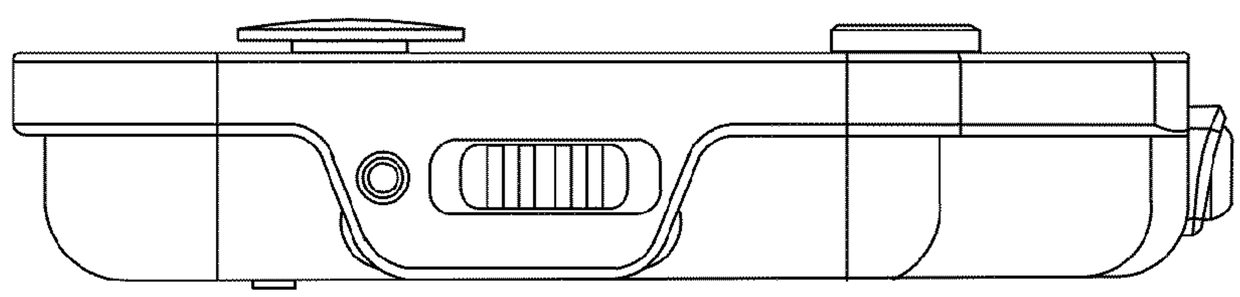

FIG. 8

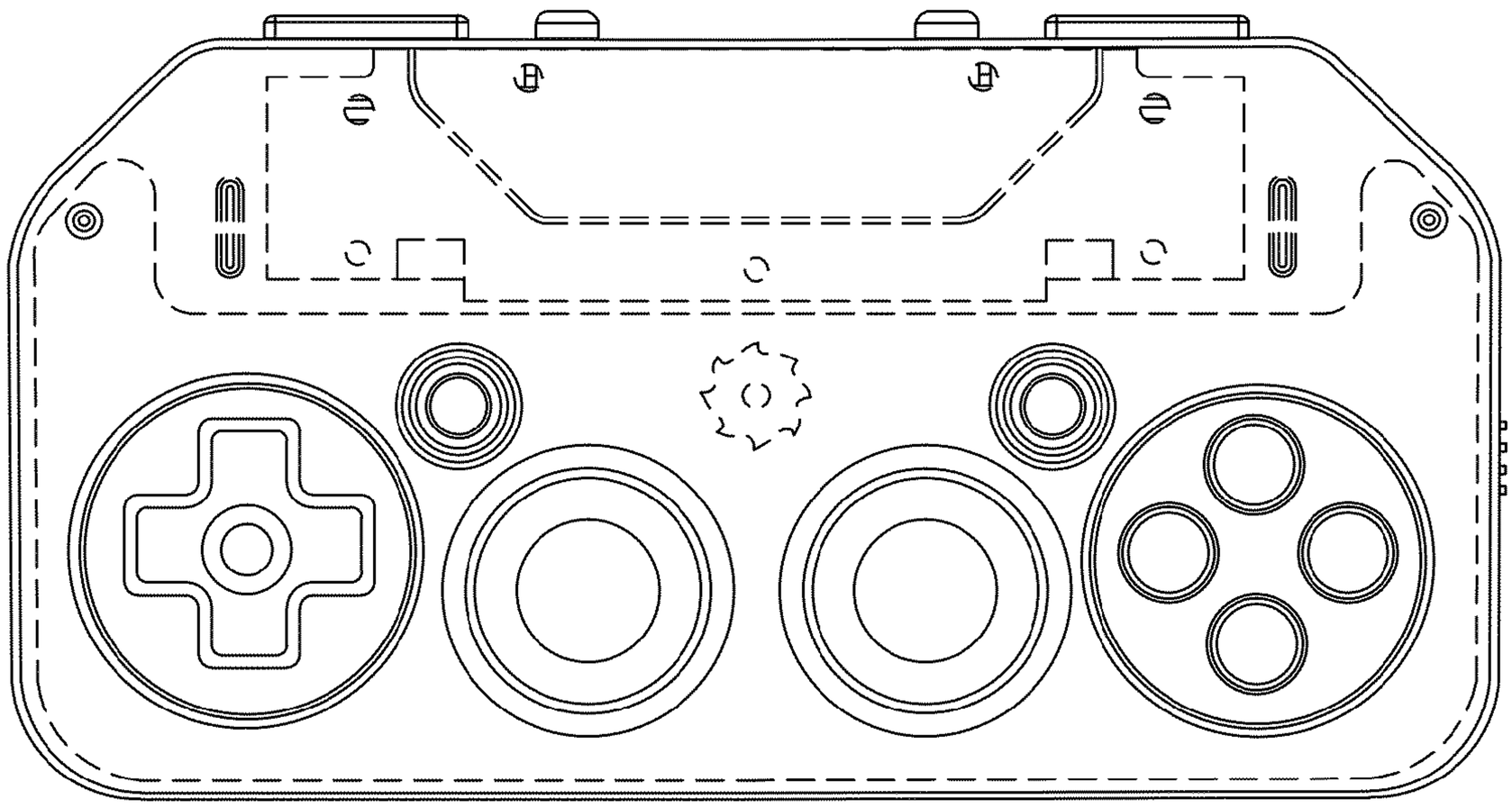

FIG. 9