US00D719197S

(12) United States Design Patent

Tsuchiya et al.

(10) Patent No.: US D719,197 S
(45) Date of Patent: ** Dec. 9, 2014

(54) **AGITATING ROTOR**

(71) Applicants: **Kazuo Tsuchiya**, Yotsukaido (JP); **Hitoshi Ryuzaki**, Chiba (JP)

(72) Inventors: **Kazuo Tsuchiya**, Yotsukaido (JP); **Hitoshi Ryuzaki**, Chiba (JP)

(73) Assignee: **Kazuo Tsuchiya**, Yotsukaido-Shi (JP)

(**) Term: **14 Years**

(21) Appl. No.: **29/464,157**

(22) Filed: **Aug. 13, 2013**

(30) **Foreign Application Priority Data**

Feb. 15, 2013 (JP) 2013-003011

(51) **LOC (10) Cl.** **15-09**

(52) **U.S. Cl.**
USPC **D15/138**

(58) **Field of Classification Search**
USPC D7/318, 376–386, 412–415, 665, 690; D14/230; D15/138, 147; D21/721; 68/213; 134/140, 147, 149, 152, 157, 134/900; 366/65, 81, 129, 135, 185, 246, 366/250, 251, 262, 265, 293, 303, 305, 317, 366/320, 321, 327, 327.3, 329, 329.1, 347, 366/605; 416/135; 526/65
See application file for complete search history.

(56) **References Cited**

U.S. PATENT DOCUMENTS

D335,677	S	*	5/1993	Davis et al.	D15/138
D443,626	S	*	6/2001	Martin	D15/138
7,097,007	B2	*	8/2006	Lin	188/218 XL
D625,747	S	*	10/2010	Reay	D15/147
D690,634	S	*	10/2013	Joseph	D12/180
2004/0200675	A1	*	10/2004	Lin	188/71.1
2007/0181390	A1	*	8/2007	Korm	188/218 XL

FOREIGN PATENT DOCUMENTS

JP 4902770 B2 1/2012

* cited by examiner

Primary Examiner — Patricia Palasik
(74) *Attorney, Agent, or Firm* — Birch, Stewart, Kolasch & Birch, LLP

(57) **CLAIM**

The ornamental design for an agitating rotor, as shown and described.

DESCRIPTION

FIG. **1** is a front, top perspective view of an agitating rotor showing my new design;
FIG. **2** is a front view thereof,
FIG. **3** is a top plan view thereof;
FIG. **4** is a bottom plan view thereof; and,
FIG. **5** is a cross-sectional view taken along line **5-5** of FIG. **3**.
The left view, the right view and the rear view are the same as the front view.
The portions shown in broken lines form no part of the claimed design including the four plugs shown in broken lines in FIG. **5**.

1 Claim, 5 Drawing Sheets

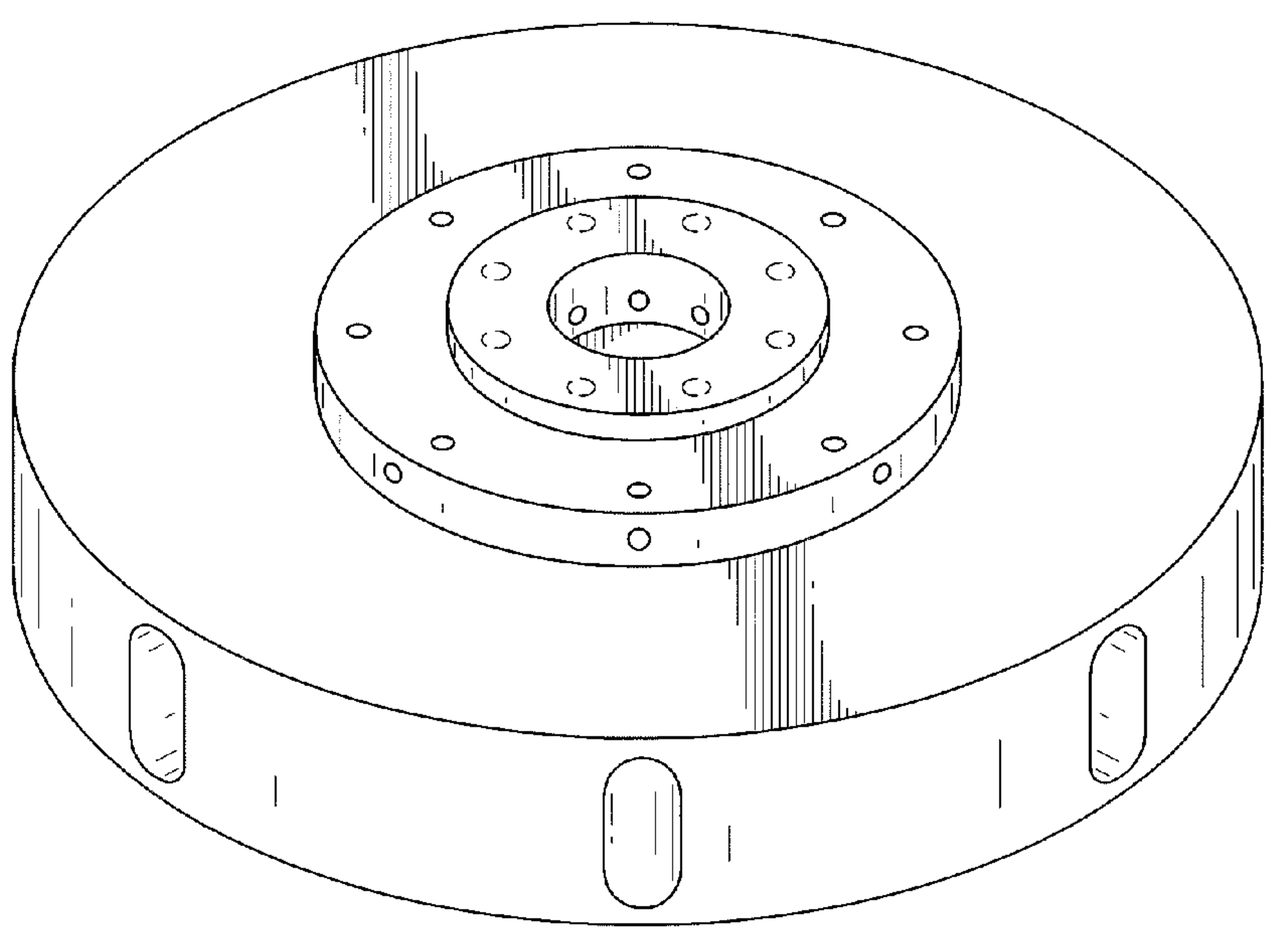

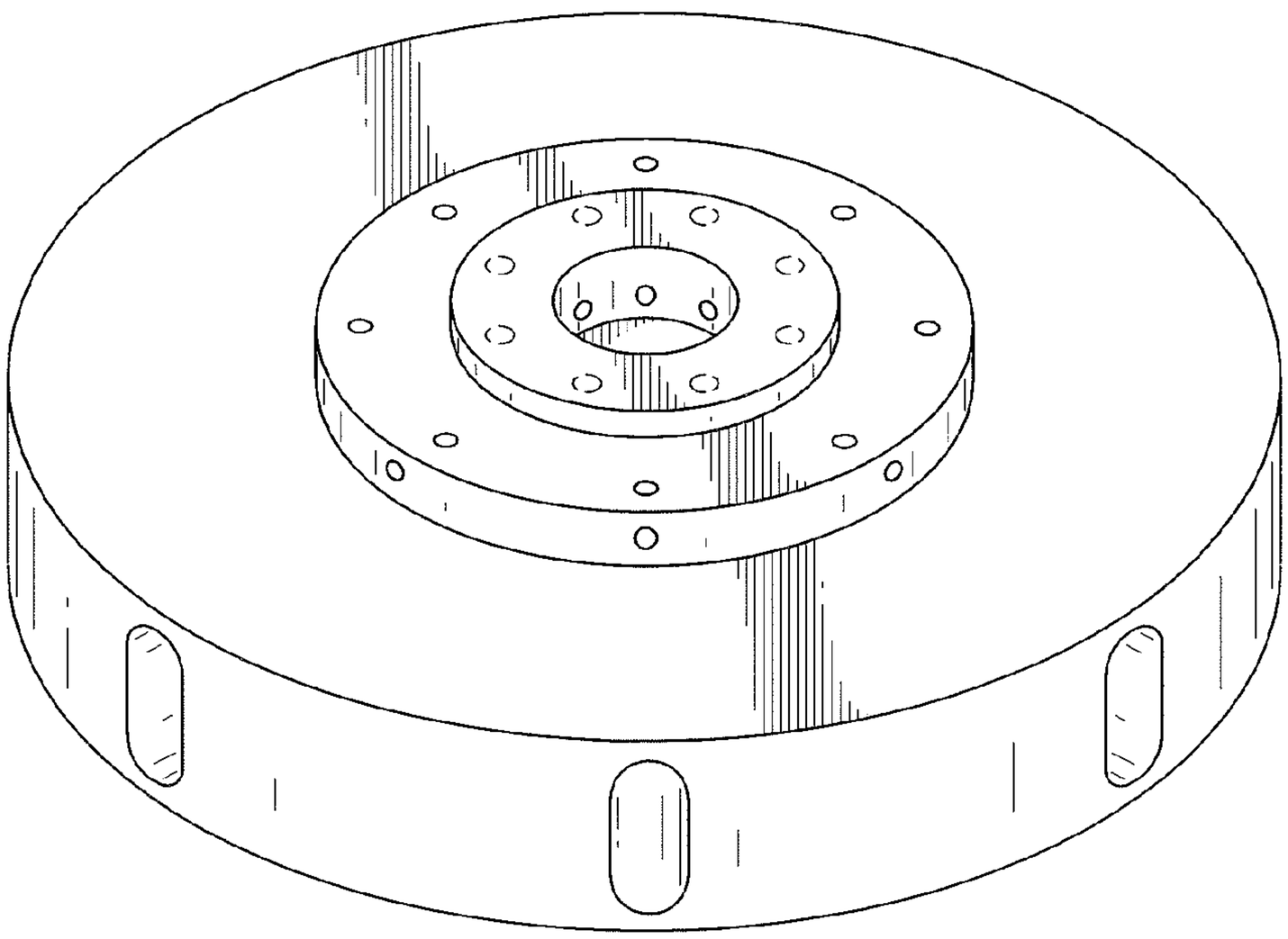

FIG.1

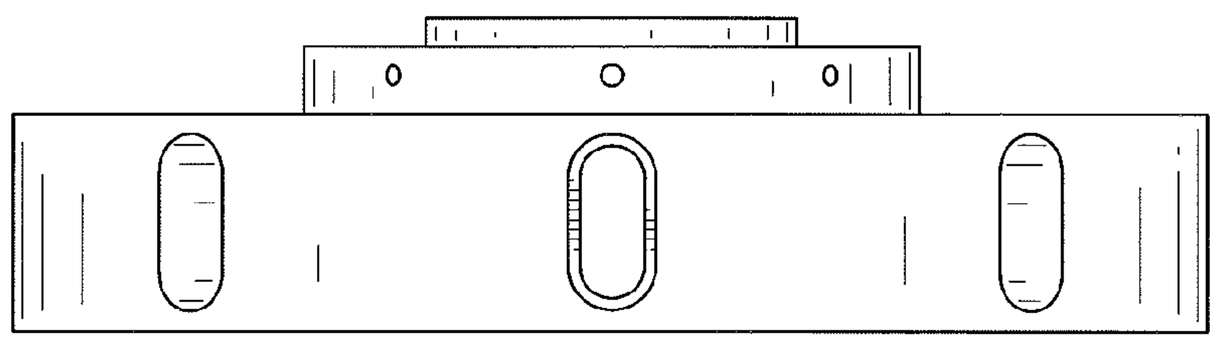

FIG.2

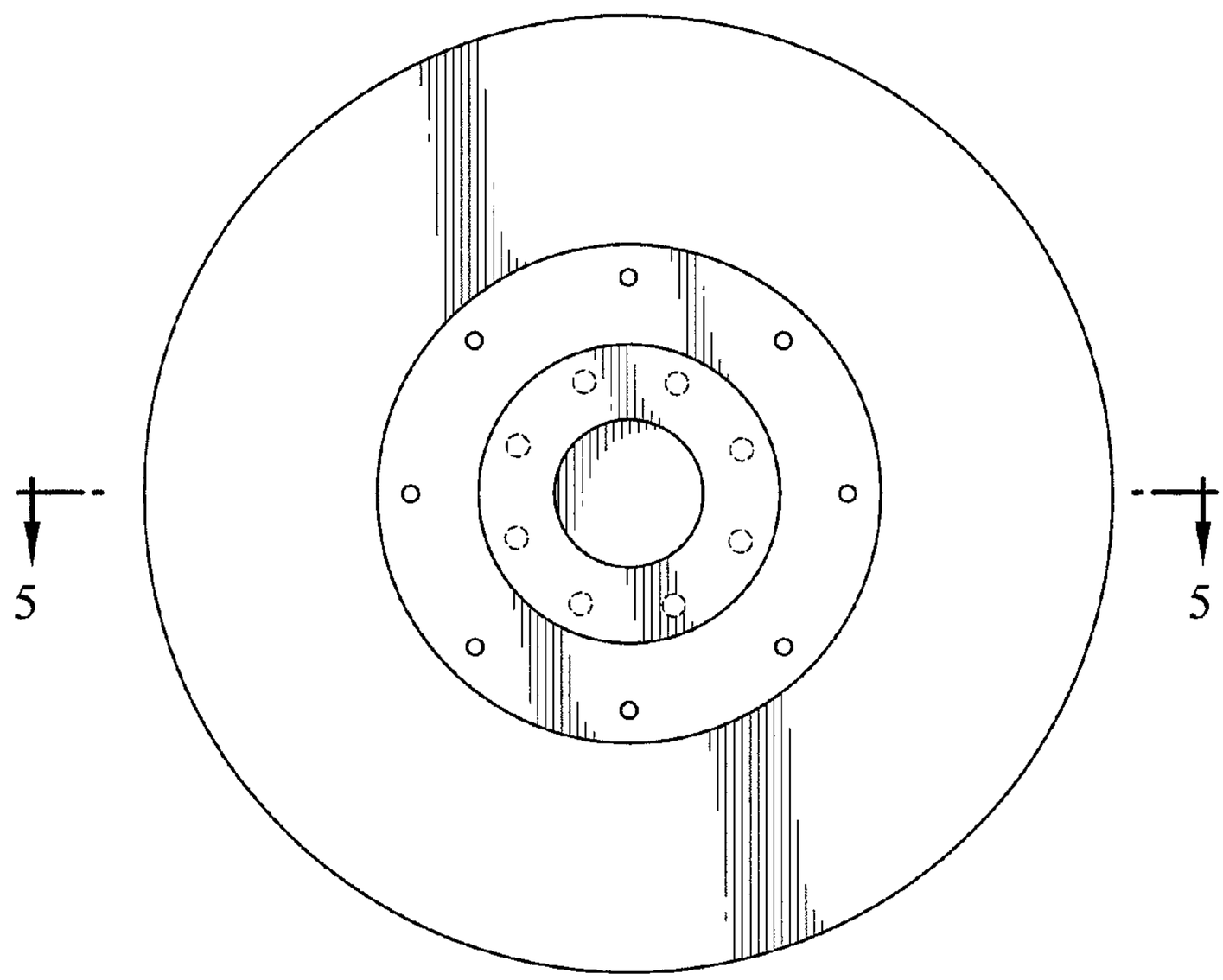

FIG.3

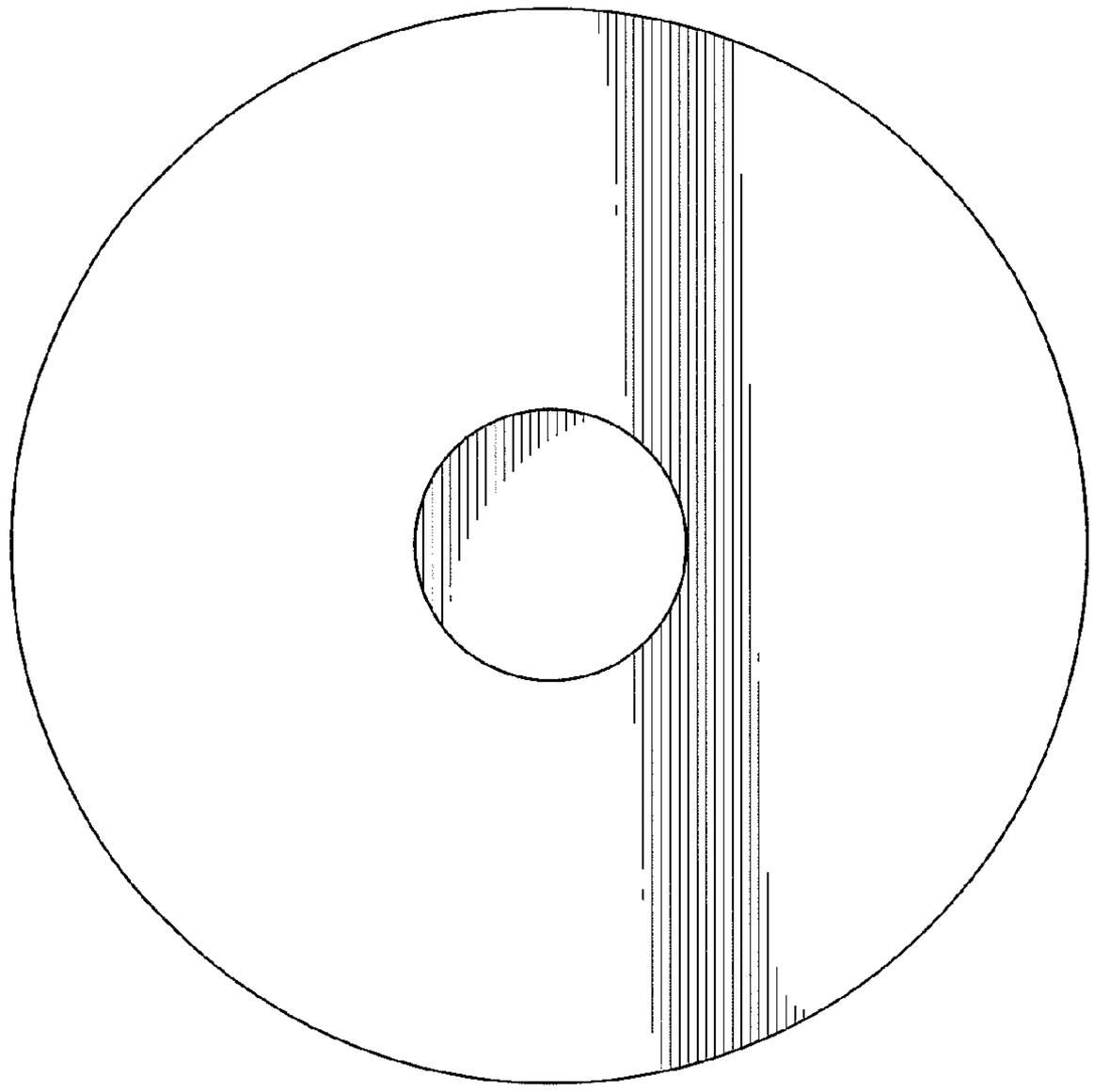

FIG.4

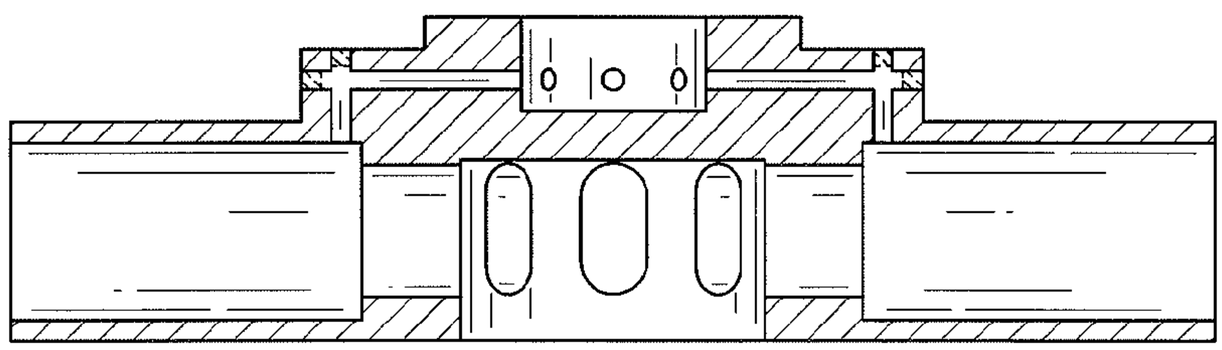

FIG.5