US00D718318S

(12) United States Design Patent

Tsuru et al.

(10) Patent No.: US D718,318 S
(45) Date of Patent: ** Nov. 25, 2014

(54) **DISPLAY PANEL WITH INFORMATIONAL DISPLAY**

(75) Inventors: **Naoki Tsuru**, Chiyoda-ku (JP); **Hiroshi Asaoka**, Chiyoda-ku (JP); **Junichi Kimura**, Chiyoda-ku (JP)

(73) Assignee: **Mitsubishi Electric Corporation**, Tokyo (JP)

(**) Term: **14 Years**

(21) Appl. No.: **29/425,687**

(22) Filed: **Jun. 26, 2012**

(30) **Foreign Application Priority Data**

Dec. 27, 2011 (JP) 2011-030288

(51) **LOC (10) Cl.** **14-04**

(52) **U.S. Cl.**
USPC **D14/485**

(58) **Field of Classification Search**
USPC D14/485–495; D18/24–33; D20/11, 12, D20/18, 22–28; 715/700–867, 961–978
See application file for complete search history.

(56) **References Cited**

U.S. PATENT DOCUMENTS

5,796,402	A *	8/1998	Ellison-Taylor	715/792
6,289,361	B1 *	9/2001	Uchida	715/201
6,310,631	B1 *	10/2001	Cecco et al.	715/792
6,771,292	B2 *	8/2004	Sharp	715/788
D594,018	S *	6/2009	Ball et al.	D14/486
7,954,064	B2 *	5/2011	Forstall et al.	715/779
7,984,376	B2 *	7/2011	Yamabuchi et al.	715/273
8,127,229	B2 *	2/2012	Inoguchi et al.	715/273
8,434,019	B2 *	4/2013	Nelson	715/798
D687,841	S *	8/2013	Arnold et al.	D14/486
D692,450	S *	10/2013	Convay et al.	D14/486
2007/0174784	A1 *	7/2007	Yu et al.	715/799
2012/0159382	A1 *	6/2012	Matthews et al.	715/788

* cited by examiner

Primary Examiner — Mary Ann Calabrese
(74) *Attorney, Agent, or Firm* — Sughrue Mion, PLLC

(57) **CLAIM**

The ornamental design for an display panel with informational display, as shown and described.

DESCRIPTION

FIG. **1** is a front, top and right side perspective view of an display panel with informational display, showing our new design;
FIG. **2** is a front elevational view thereof;
FIG. **3** is a rear elevational view thereof;
FIG. **4** is a right side elevational view thereof;
FIG. **5** is a top plan view thereof; and,
FIG. **6** is a reference front elevational view showing, the state in use.
The broken lines represent a display panel and form no part of the claimed design.

1 Claim, 5 Drawing Sheets

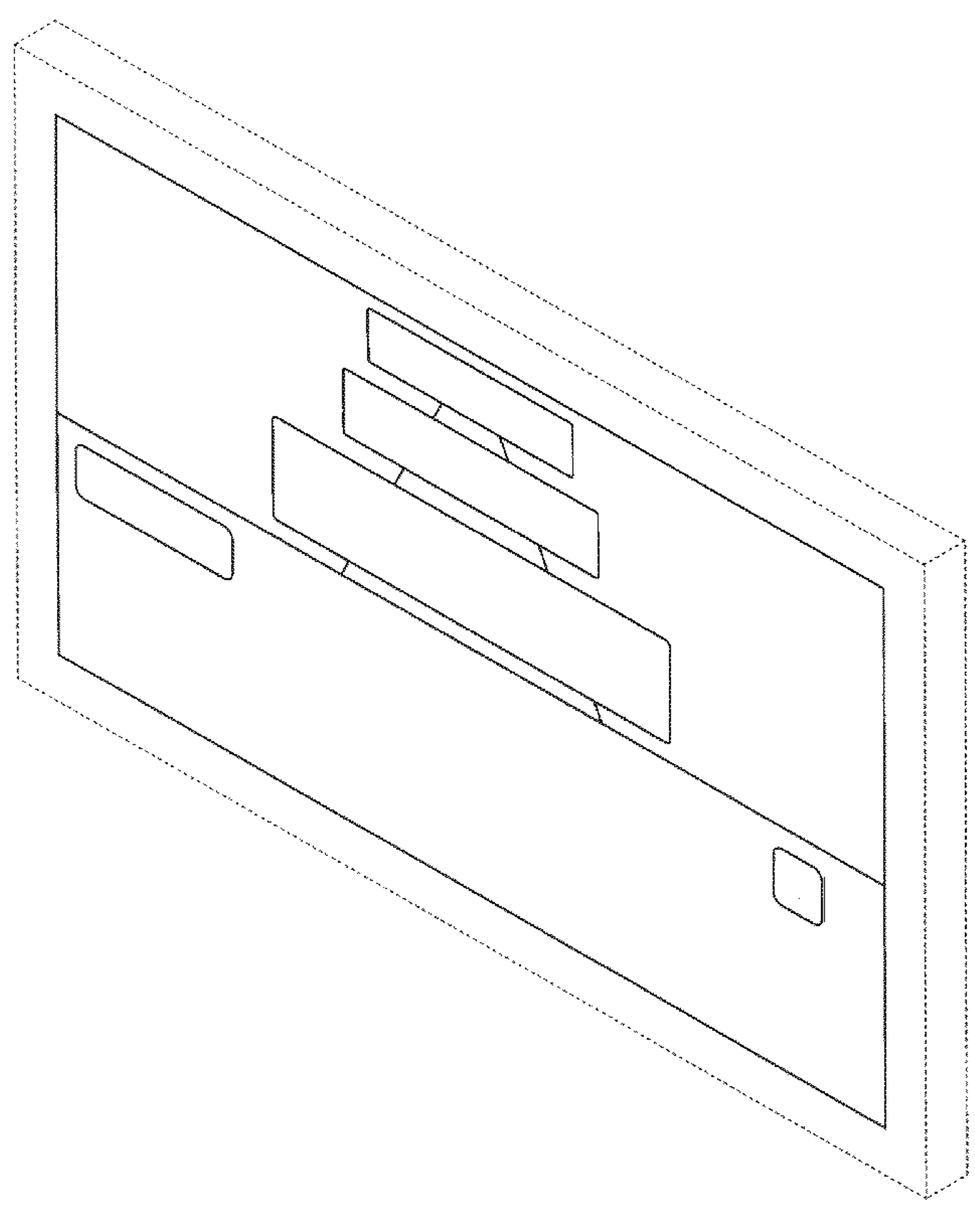

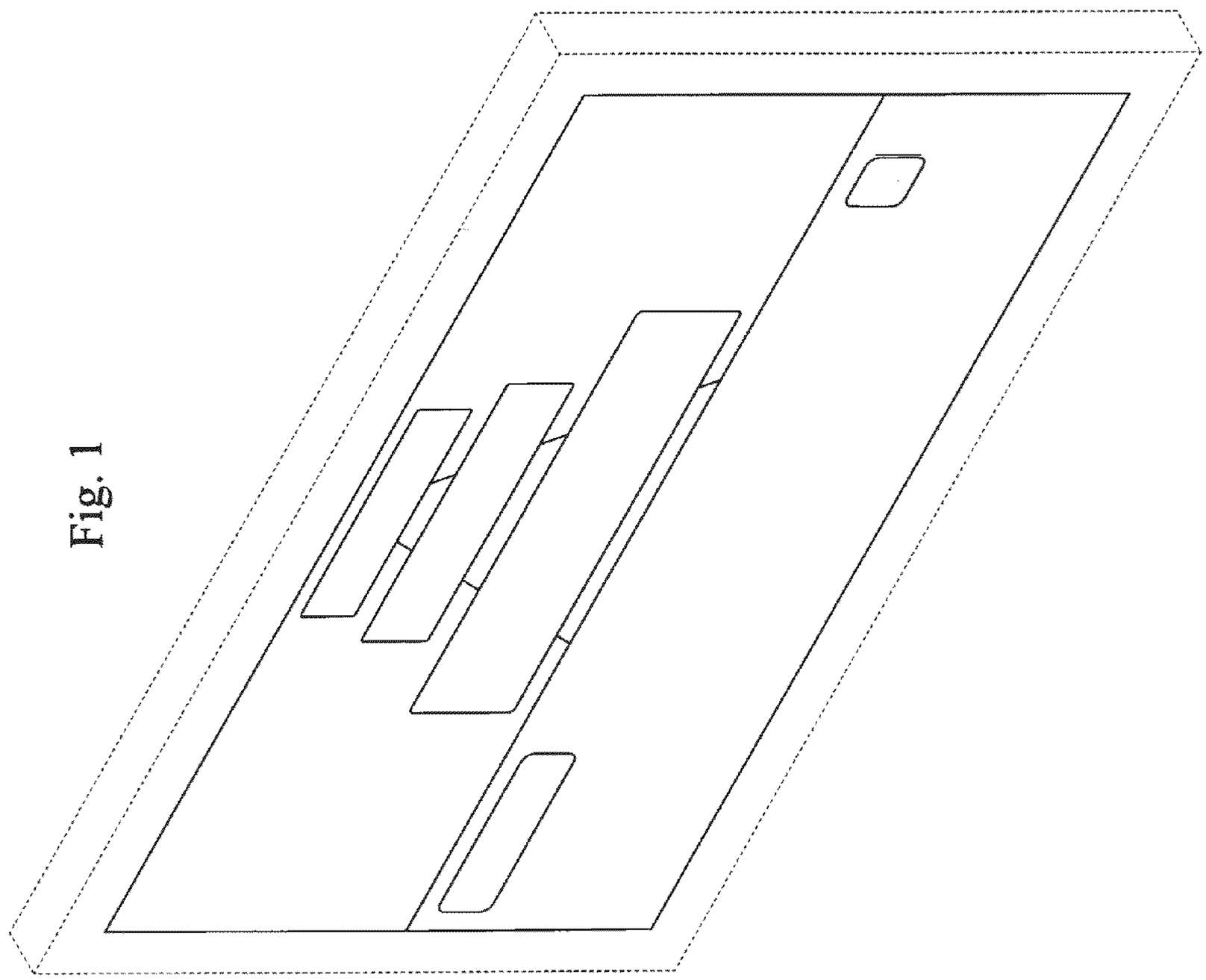

Fig. 1

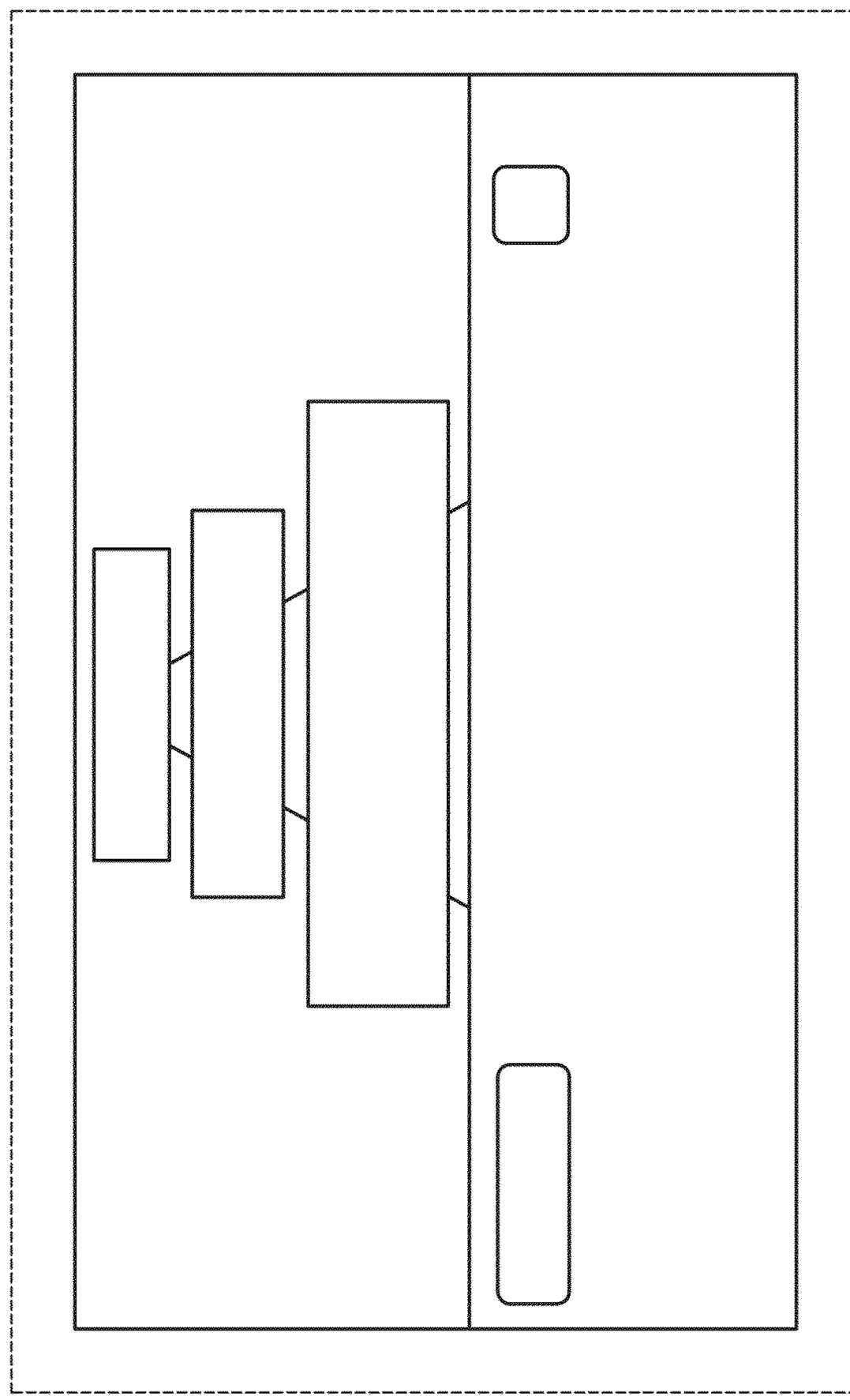

Fig. 2

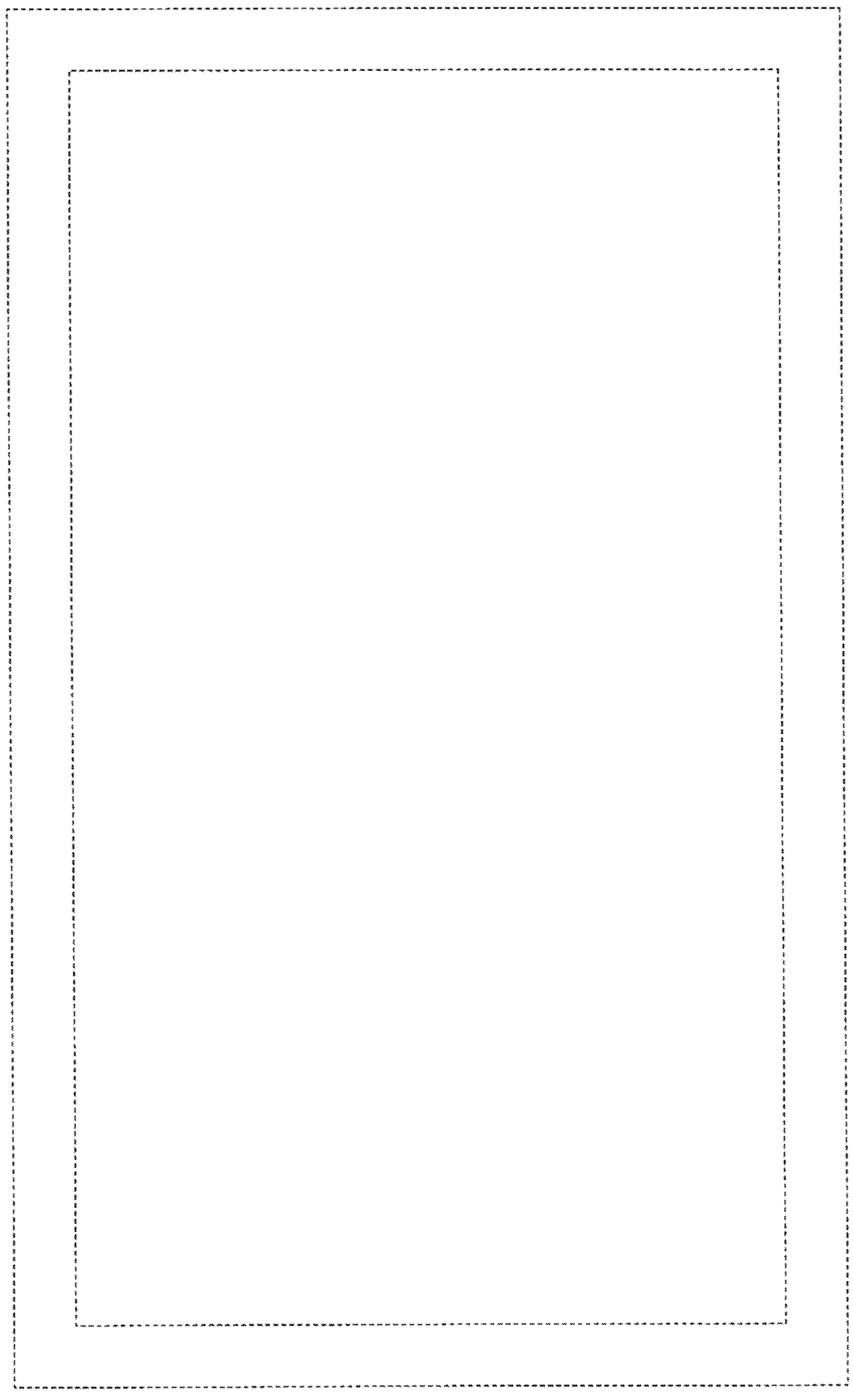

Fig. 3

Fig. 4

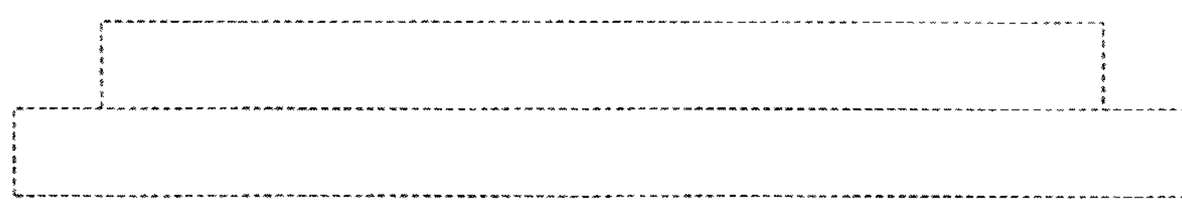

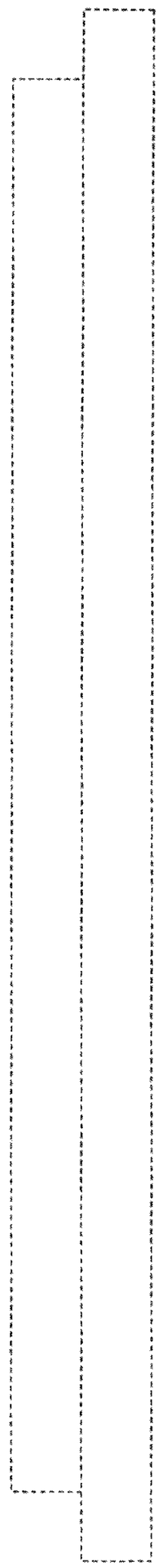

Fig. 5