US00D716574S

(12) United States Design Patent
Akkad

(10) Patent No.: US D716,574 S
(45) Date of Patent: ** Nov. 4, 2014

(54) **WEBBED SAUCER CHAIR WITH CENTRAL PAD**

(71) Applicant: **Idea Nuova, Inc.**, New York, NY (US)

(72) Inventor: **Benjamin S. Akkad**, New York, NY (US)

(73) Assignee: **Idea Nuova, Inc.**, New York, NY (US)

(**) Term: **14 Years**

(21) Appl. No.: **29/483,471**

(22) Filed: **Feb. 28, 2014**

(51) **LOC (10) Cl.** **06-01**

(52) **U.S. Cl.**
USPC **D6/368**

(58) **Field of Classification Search**
USPC D6/334–336, 348–349, 363, 366–369, D6/371–376, 379, 716, 716.1–716.4; 273/396; 297/16.1, 16.2, 31, 34, 297/45–47, 50, 56, 271.6, 314, 411.41, 297/440.11, 440.24, 448.1, 451.4, 452.12, 297/452.13; 473/197, 431, 456
See application file for complete search history.

(56) **References Cited**

U.S. PATENT DOCUMENTS

244,216	A	7/1881	Fenby
398,943	A	3/1889	Crandall
615,476	A	12/1898	Chapman
1,027,692	A	5/1912	Cole
1,185,568	A	5/1916	Zeunert
1,263,717	A	4/1918	Stone
1,443,734	A	1/1923	Clyde
1,939,743	A	12/1933	Warner
1,942,112	A	1/1934	McQuilkin

(Continued)

FOREIGN PATENT DOCUMENTS

CN	87201431	U	2/1988
CN	2103938	U	5/1992

(Continued)

OTHER PUBLICATIONS

Office Action Issued Oct. 18, 2010 in U.S. Appl. No. 12/544,256.

(Continued)

Primary Examiner — Ricky Pham
(74) *Attorney, Agent, or Firm* — Panitch Schwarze Belisario & Nadel LLP

(57) **CLAIM**

The ornamental design for a webbed saucer chair with central pad, as shown and described.

DESCRIPTION

FIG. **1** is a front perspective view of a webbed saucer chair with central pad in accordance with a first preferred embodiment of my new design;
FIG. **2** is a front elevation view thereof;
FIG. **3** is a left side elevation view thereof, a right side elevation view thereof being a mirror image;
FIG. **4** is a rear elevation view thereof;
FIG. **5** is a top plan view thereof;
FIG. **6** is a bottom plan view thereof;
FIG. **7** is a front perspective view of a webbed saucer chair with central pad in accordance with a second preferred embodiment of my new design;
FIG. **8** is a front elevation view thereof;
FIG. **9** is a left side elevation view thereof, a right side elevation view thereof being a mirror image;
FIG. **10** is a rear elevation view thereof;
FIG. **11** is a top plan view thereof; and,
FIG. **12** is a bottom plan view thereof.
The broken lines in the figures are for the purpose of showing environmental structure and form no part of the claimed design.

1 Claim, 10 Drawing Sheets

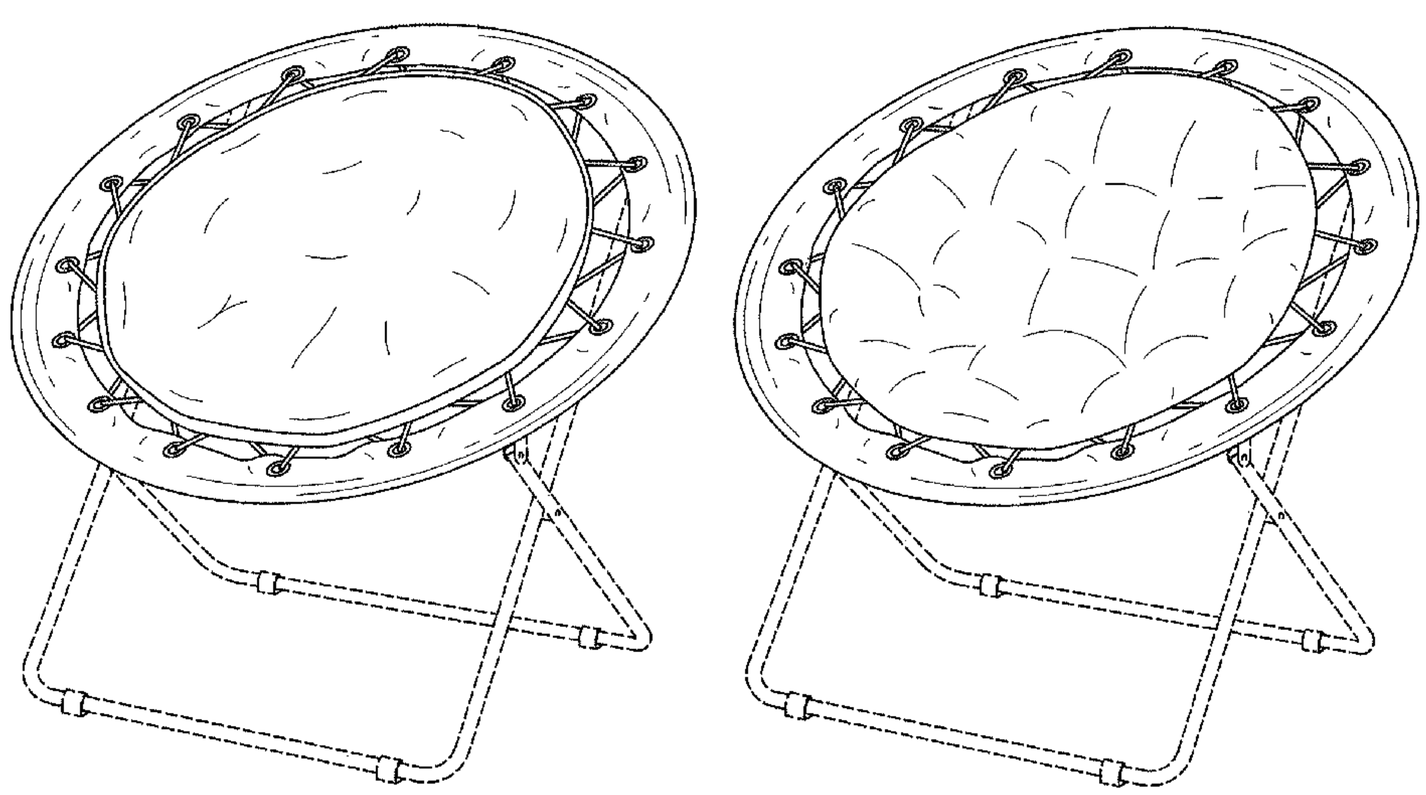

(56) **References Cited**

U.S. PATENT DOCUMENTS

2,381,574 A 8/1945 Clarin
2,473,090 A 6/1949 Becker
2,587,543 A 2/1952 Smith
2,590,049 A 3/1952 Sidlinger
D168,212 S * 11/1952 Cicchelli D6/379
2,649,901 A 8/1953 Johnson
D171,176 S 12/1953 Yellen
D171,265 S * 1/1954 Phillips D6/375
2,684,709 A * 7/1954 Schawinsky 297/411.41
2,691,410 A 10/1954 Boucher
2,712,349 A 7/1955 LeVoir
2,713,890 A 7/1955 Mack
2,723,712 A * 11/1955 Yellen 297/440.11
2,733,755 A 2/1956 Boucher
2,763,318 A 9/1956 Bertoia
D179,376 S * 12/1956 Breed D6/366
D180,210 S 4/1957 Uretsky
D184,202 S * 12/1958 Yuen D6/369
2,902,084 A 9/1959 Stevens
2,916,744 A 12/1959 May
2,930,430 A * 3/1960 Bloom 297/271.6
3,123,396 A 3/1964 Searle
3,124,387 A 3/1964 MacLaren
3,136,272 A 6/1964 Sprigman
3,180,685 A * 4/1965 Rogalski et al. 297/440.24
3,635,520 A 1/1972 Roher et al.
3,656,808 A * 4/1972 Chang 297/451.4
3,694,030 A * 9/1972 Grosfillex 297/448.1
3,767,192 A 10/1973 Eriksson
3,838,883 A 10/1974 Machen
3,941,416 A 3/1976 Uchida
4,045,045 A 8/1977 Boucher et al.
4,047,752 A 9/1977 Rohr
4,105,244 A 8/1978 Colby
4,118,065 A 10/1978 Watkins
4,193,630 A 3/1980 Steele
4,231,582 A 11/1980 Moss
4,258,951 A 3/1981 Groom
4,290,643 A 9/1981 Logan, III
D262,674 S 1/1982 Logan, III
D267,057 S 11/1982 Koehm
D270,557 S 9/1983 Williams
4,514,009 A 4/1985 Vanderminden et al.
4,605,261 A 8/1986 Lee
D287,909 S 1/1987 Weiss
4,652,047 A 3/1987 Chan
D290,557 S 6/1987 Salvati et al.
4,671,566 A 6/1987 Knapp et al.
4,685,725 A 8/1987 Helfrich
D292,048 S * 9/1987 Shaffer D6/363
4,715,650 A 12/1987 Berman et al.
4,717,201 A 1/1988 Barras
4,789,123 A 12/1988 Mattsson
4,826,241 A 5/1989 Barras
4,867,505 A 9/1989 Parker
4,889,383 A 12/1989 Jones
4,934,638 A 6/1990 Davis
D310,605 S 9/1990 Kwon
5,058,950 A 10/1991 Mann
5,176,393 A 1/1993 Robertson et al.
5,246,265 A 9/1993 Nagan et al.
5,320,404 A 6/1994 Le Gal
5,335,967 A 8/1994 Vanderminden, Sr.
5,494,333 A 2/1996 Wilson
5,496,094 A 3/1996 Schwartzkopf et al.
5,499,857 A 3/1996 Lynch, Jr.
5,522,642 A 6/1996 Herzog
5,580,129 A 12/1996 Findlay
D380,306 S 7/1997 Lin
D382,126 S 8/1997 Lee
D382,414 S 8/1997 Lee
5,718,473 A 2/1998 Lynch, Jr.
5,848,822 A 12/1998 Wu
5,893,605 A 4/1999 Chang
D411,387 S 6/1999 Zheng
5,979,976 A 11/1999 Ferencik
5,984,406 A 11/1999 Lee
6,045,177 A 4/2000 Grace
6,056,354 A 5/2000 Tseng
6,082,813 A 7/2000 Chen
6,095,607 A 8/2000 Wenzel
6,112,757 A 9/2000 Tseng
D431,382 S 10/2000 Eloge et al.
D432,325 S 10/2000 Zheng et al.
D432,823 S 10/2000 Zheng
D433,244 S 11/2000 Zheng
D433,574 S 11/2000 Zheng
6,149,238 A 11/2000 Tsai
6,179,374 B1 1/2001 Tang
6,209,951 B1 4/2001 Han
6,231,119 B1 5/2001 Zheng
6,237,993 B1 5/2001 Zheng
6,238,001 B1 5/2001 Yoran
6,241,311 B1 6/2001 Zheng
6,247,748 B1 6/2001 Zheng
6,264,271 B1 7/2001 Munn et al.
6,283,046 B1 9/2001 Tseng
6,296,304 B1 10/2001 Zheng
6,302,479 B1 10/2001 Zheng
6,312,343 B1 11/2001 Cho
6,322,138 B1 11/2001 Tang
6,332,646 B1 12/2001 Tseng
6,354,657 B1 3/2002 Nelson et al.
6,364,411 B1 4/2002 Zheng
6,371,553 B1 4/2002 Tang
D456,628 S 5/2002 Satoshi
6,382,715 B1 5/2002 Tang
6,382,729 B1 5/2002 Wu
6,402,230 B1 6/2002 Tang
D460,280 S 7/2002 Fox
6,419,311 B1 7/2002 Tang
6,447,057 B1 9/2002 Chen
6,454,348 B1 9/2002 Wu
6,488,331 B2 12/2002 Chen
6,494,530 B1 12/2002 Zheng
D468,939 S 1/2003 Zheng
6,505,885 B1 1/2003 Tang
6,547,322 B2 4/2003 Marx
6,554,717 B2 * 4/2003 Cho 473/197
D475,860 S 6/2003 Yang
6,601,912 B1 8/2003 Chen
6,607,240 B2 8/2003 Zheng
6,629,722 B1 10/2003 Tang
6,634,705 B1 10/2003 Zheng
6,637,811 B2 10/2003 Zheng
6,644,731 B2 11/2003 Tang
6,669,281 B1 12/2003 Huang
6,682,135 B2 1/2004 Zheng
D486,310 S 2/2004 Goldy
6,698,827 B2 3/2004 Le Gette et al.
6,702,371 B2 3/2004 Zheng
6,715,824 B2 4/2004 Zheng
6,736,450 B2 5/2004 Miyagi
6,755,462 B2 6/2004 Zheng
6,779,838 B2 8/2004 Chang
6,814,403 B2 11/2004 Zheng
6,817,661 B2 11/2004 Zheng
6,817,671 B1 11/2004 Zheng
6,820,927 B2 11/2004 Isom et al.
6,824,207 B1 * 11/2004 Lin 297/16.1
6,824,208 B2 11/2004 Zheng
6,824,210 B2 11/2004 Zheng
D499,258 S * 12/2004 Tseng D6/368
D500,605 S 1/2005 Schmidt et al.
6,840,573 B1 * 1/2005 Yao 297/16.1
6,840,574 B1 1/2005 Wu
6,848,740 B1 * 2/2005 Reese 297/16.1
D503,554 S 4/2005 Kay
6,877,814 B2 * 4/2005 Lin 297/440.24
6,883,862 B1 * 4/2005 Yao 297/16.1
6,899,383 B2 5/2005 Hwang
D507,892 S 8/2005 Zheng
6,926,355 B2 8/2005 Le Gette et al.
6,926,356 B2 8/2005 Chen

(56) **References Cited**

U.S. PATENT DOCUMENTS

6,938,951	B1	9/2005	Tseng	
6,957,852	B1	10/2005	Hsieh	
D515,830	S	2/2006	Zheng	
6,997,634	B2	2/2006	Zheng	
7,000,983	B1	2/2006	Tsai	
D516,825	S	3/2006	Zheng	
D516,826	S	3/2006	Zheng	
D517,819	S	3/2006	Zheng	
7,011,372	B1 *	3/2006	Hsieh	297/440.24
7,017,985	B2	3/2006	Chen	
D522,263	S	6/2006	Hart	
7,073,852	B1	7/2006	Zheng	
D528,317	S	9/2006	Tseng	
7,100,877	B2	9/2006	Bourke et al.	
7,100,975	B1	9/2006	Zheng	
D529,304	S	10/2006	Le Gal	
D529,728	S	10/2006	Le Gal	
7,140,689	B2	11/2006	Zheng	
7,144,078	B2	12/2006	Hsieh	
7,178,864	B2 *	2/2007	Hsieh	297/45
7,219,955	B2	5/2007	Lu et al.	
7,229,128	B2	6/2007	Lee	
7,229,131	B2	6/2007	Chen	
7,264,245	B2 *	9/2007	Cho	273/396
D554,873	S *	11/2007	Ma	D6/349
D555,378	S *	11/2007	Tsai	D6/368
7,328,940	B2	2/2008	Zheng	
7,396,073	B2	7/2008	Zheng	
7,404,601	B2 *	7/2008	Chen	297/16.2
7,441,287	B2	10/2008	Zheng	
7,600,810	B2	10/2009	Chen et al.	
D608,104	S *	1/2010	Vonnegut	D6/372
7,648,421	B2 *	1/2010	Yoon	473/197
7,938,489	B2 *	5/2011	Nazari	297/314
D649,800	S *	12/2011	Lievore et al.	D6/373
D656,326	S *	3/2012	Soewondo	D6/348
D661,360	S	6/2012	Campanaro et al.	
8,282,509	B1 *	10/2012	Michaelson et al.	473/456
D677,920	S *	3/2013	Christakos	D6/368
D681,970	S *	5/2013	Christakos	D6/368
D683,156	S *	5/2013	Christakos	D6/368
D688,057	S *	8/2013	Christakos	D6/368
D691,384	S *	10/2013	Akkad	D6/368
D703,460	S	4/2014	Kreuzer et al.	
D711,151	S	8/2014	Christakos	
2002/0024240	A1	2/2002	Chen	
2002/0043822	A1	4/2002	Choi et al.	
2002/0074834	A1	6/2002	Summar et al.	
2002/0183128	A1 *	12/2002	Cho	473/197
2003/0006632	A1	1/2003	Ku	
2003/0015892	A1	1/2003	Wu	
2003/0020304	A1	1/2003	Zheng	
2003/0052518	A1	3/2003	Zheng	
2003/0057741	A1	3/2003	Zheng	
2003/0057747	A1	3/2003	Johnston	
2003/0060309	A1 *	3/2003	Smith, IV	473/431
2003/0094836	A1	5/2003	Chen	
2003/0111872	A1	6/2003	Zheng	
2003/0111874	A1	6/2003	Zheng	
2003/0127885	A1	7/2003	Tang	
2003/0234561	A1	12/2003	Zheng	
2004/0007903	A1	1/2004	Chang	
2004/0036323	A1	2/2004	Hwang	
2004/0066075	A1	4/2004	Yeh	
2004/0094996	A1	5/2004	Zheng	
2004/0094997	A1	5/2004	Zheng	
2004/0113476	A1	6/2004	Chang	
2004/0130190	A1	7/2004	Zheng	
2004/0135405	A1	7/2004	Zheng	
2004/0232740	A1	11/2004	Enge	
2004/0245810	A1	12/2004	Tseng	
2005/0077758	A1	4/2005	Reese	
2005/0088018	A1 *	4/2005	Yao	297/16.1
2005/0236873	A1	10/2005	Edward	
2005/0248202	A1	11/2005	Zheng	
2006/0186711	A1	8/2006	Phipps	
2007/0029846	A1	2/2007	Cohen	
2007/0102974	A1	5/2007	Chen	
2007/0187998	A1 *	8/2007	Chen	297/45
2007/0200395	A1	8/2007	Zheng	
2007/0267901	A1	11/2007	Zheng	
2008/0224504	A1	9/2008	Fargason	
2008/0231088	A1	9/2008	Zheng	
2010/0164256	A1	7/2010	Salisbury	
2010/0231015	A1	9/2010	Lundeen	

FOREIGN PATENT DOCUMENTS

CN	2117779	U	10/1992
CN	2137107	Y	6/1993
CN	2179041	Y	10/1994
CN	2188885	Y	2/1995
CN	2196945	Y	5/1995
CN	1139537	A	1/1997
CN	2326083	Y	6/1999
CN	2328266	Y	7/1999
CN	2339063	Y	9/1999
CN	2349884	Y	11/1999
CN	2367154	Y	3/2000
EP	139306	A1	5/1985
EP	997090	A1	5/2000
FR	2833824	A1	6/2003
FR	2837081	A1	9/2003
GB	599760	A	3/1948
GB	2022405	A	12/1979
GB	2025213	A	1/1980
GB	2331233	A	5/1999
JP	38-12532		6/1938
JP	50123508	A	9/1975
JP	51127856	A	11/1976
JP	55120347	A	9/1980
JP	2001070077	A	3/2001
JP	2002165667	A	6/2002
JP	2002233429	A	8/2002
JP	2002360371	A	12/2002
JP	2004105557	A	4/2004
WO	2004021835	A1	3/2004

OTHER PUBLICATIONS

U.S. Appl. No. 13/570,472 by Akkad, filed Aug. 9, 2012.
U.S. Appl. No. 29/434,983 by Akkad, filed Oct. 18, 2012.
Office Action issued Jan. 28, 2014 in CA Application No. 2,791,594.
Office Action issued Sep. 20, 2013 in U.S. Appl. No. 13/570,472 by Akkad.
Office Action issued Jan. 14, 2014 in U.S. Appl. No. 13/570,472 by Akkad.
U.S. Appl. No. 29/483,488 by Akkad, filed Feb. 28, 2014.
U.S. Appl. No. 29/478,866 by Akkad, filed Jan. 9, 2014.
U.S. Appl. No. 29/493,606 by Akkad, filed Jun. 11, 2014.
U.S. Appl. No. 29/493,607 by Akkad, filed Jun. 11, 2014.

* cited by examiner

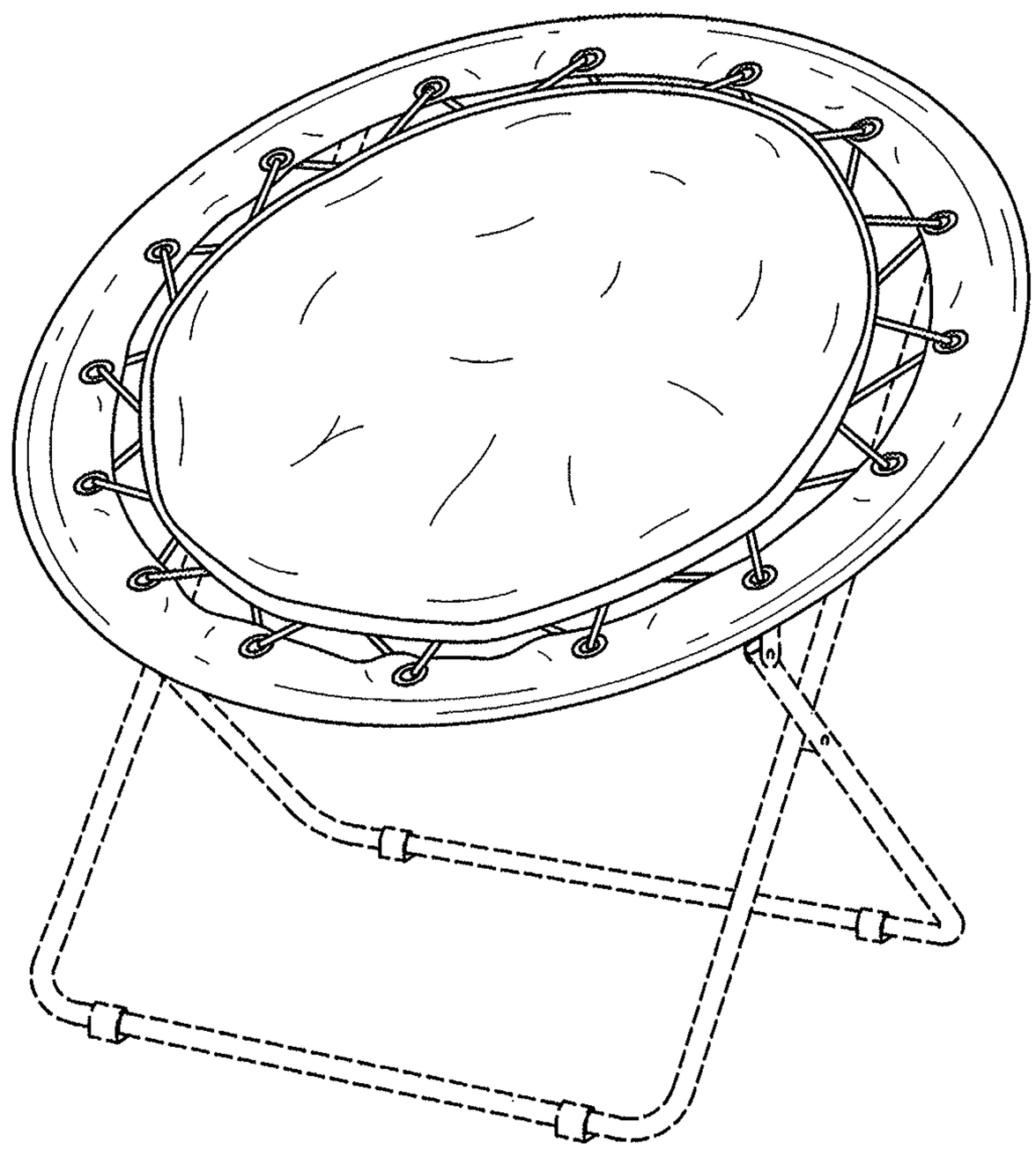

Fig. 1

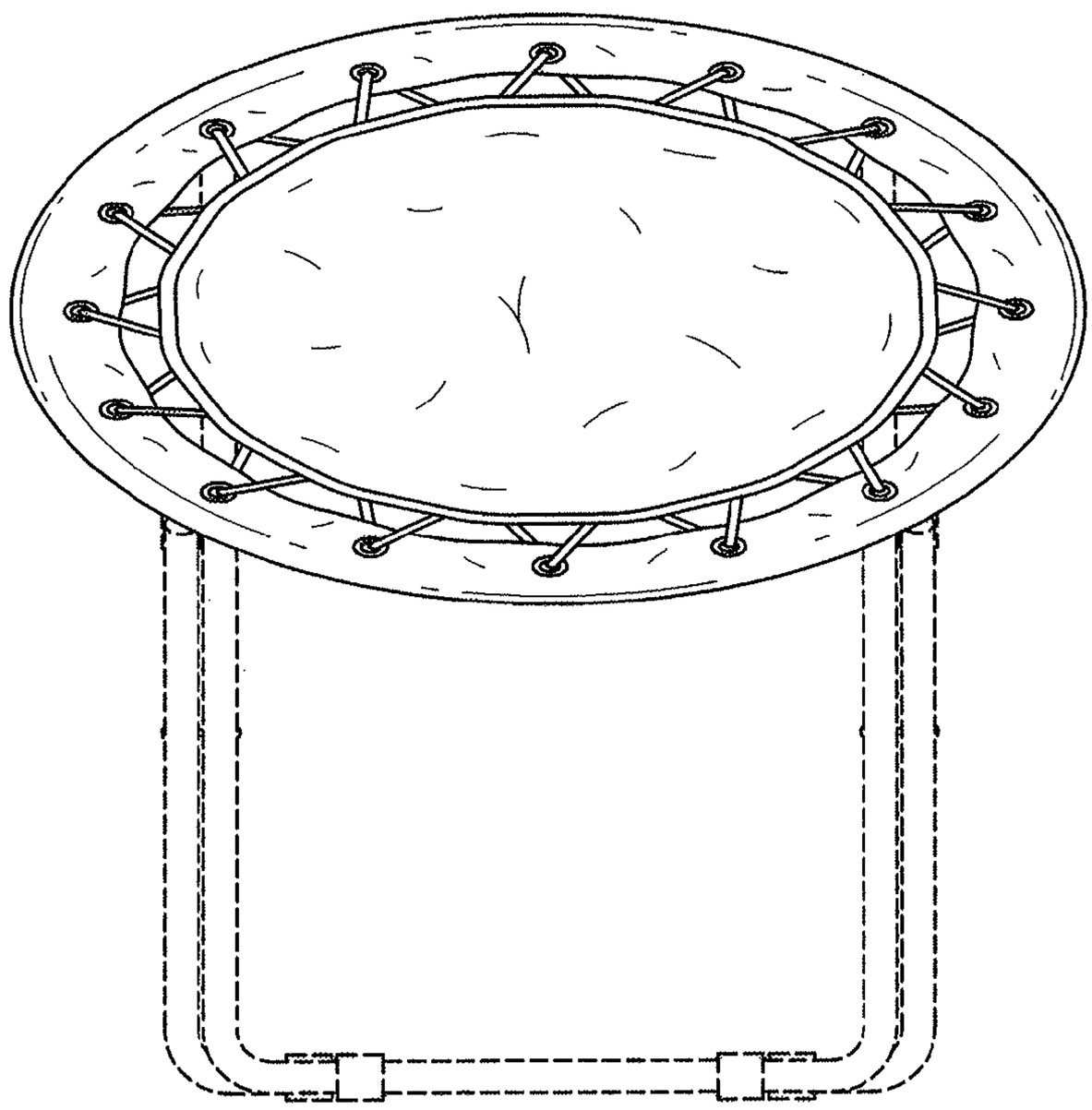

Fig. 2

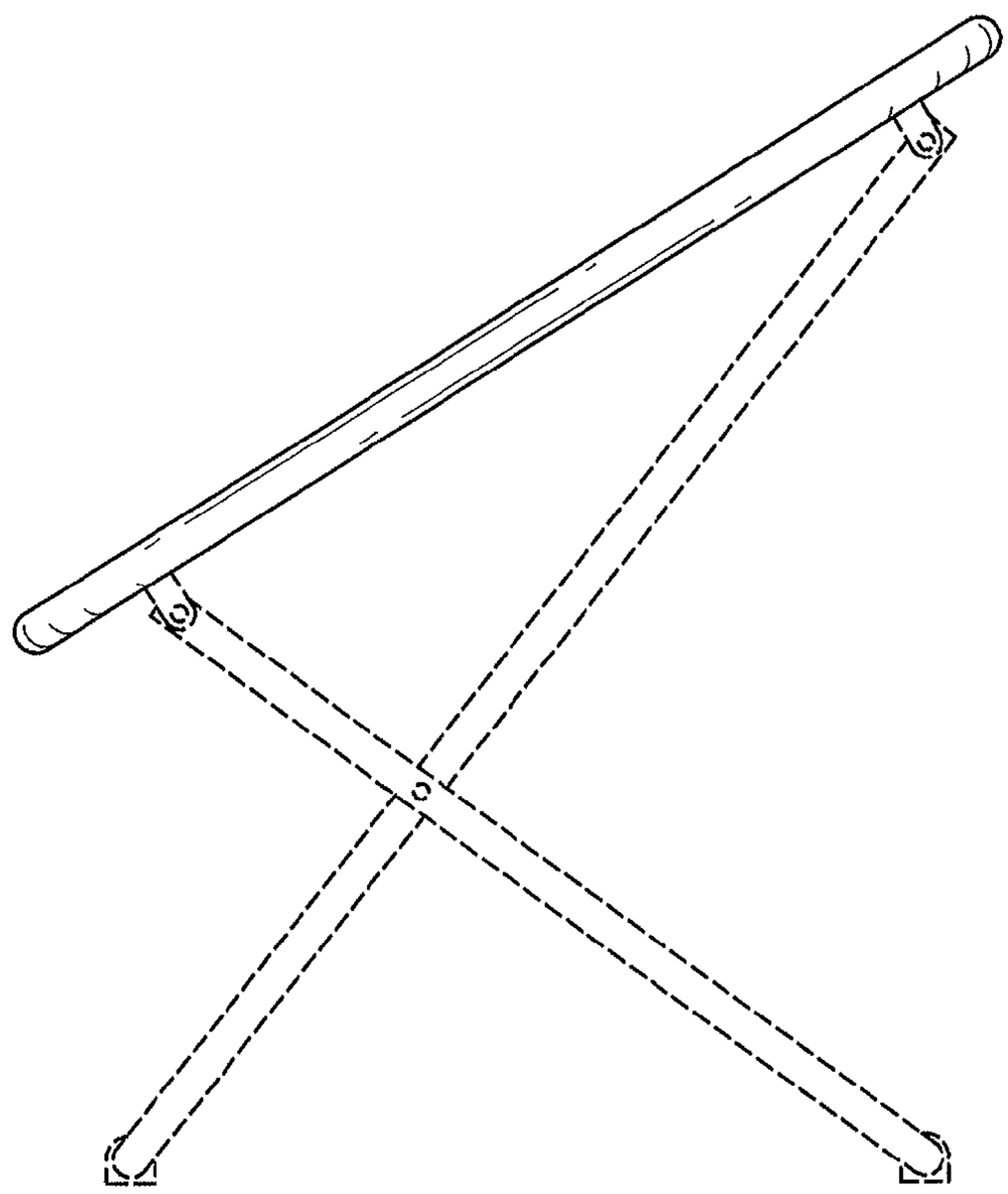

Fig. 3

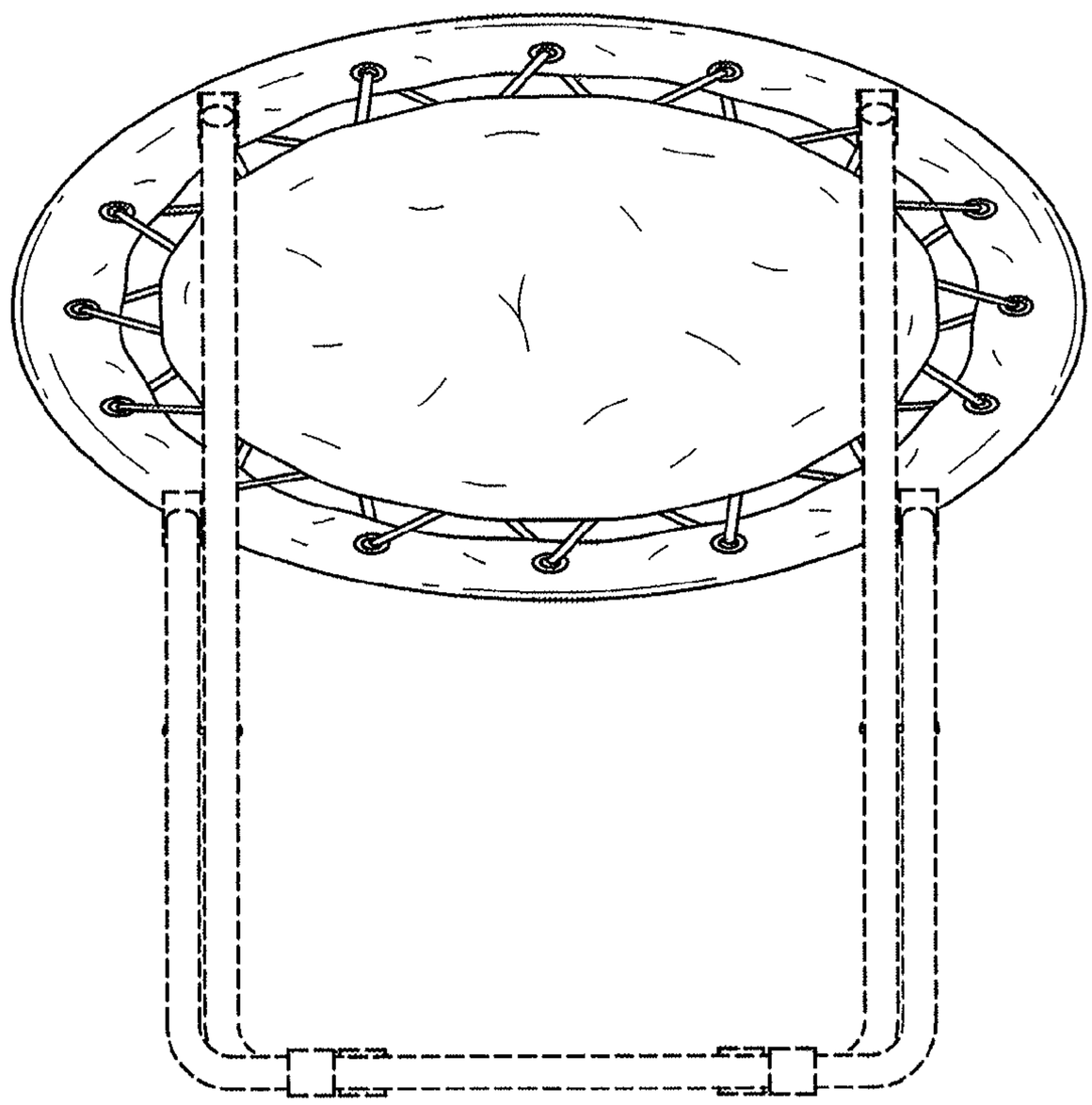

Fig. 4

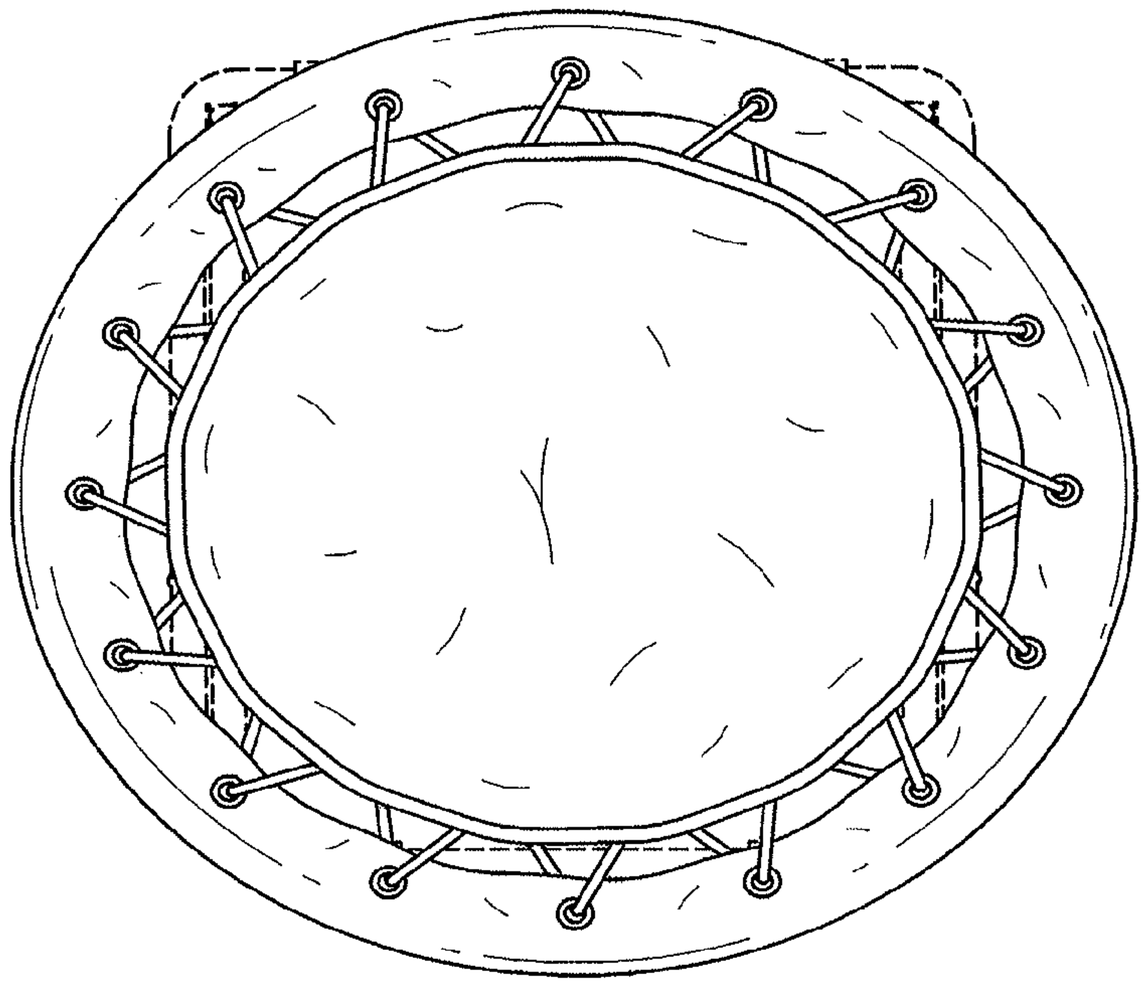

Fig. 5

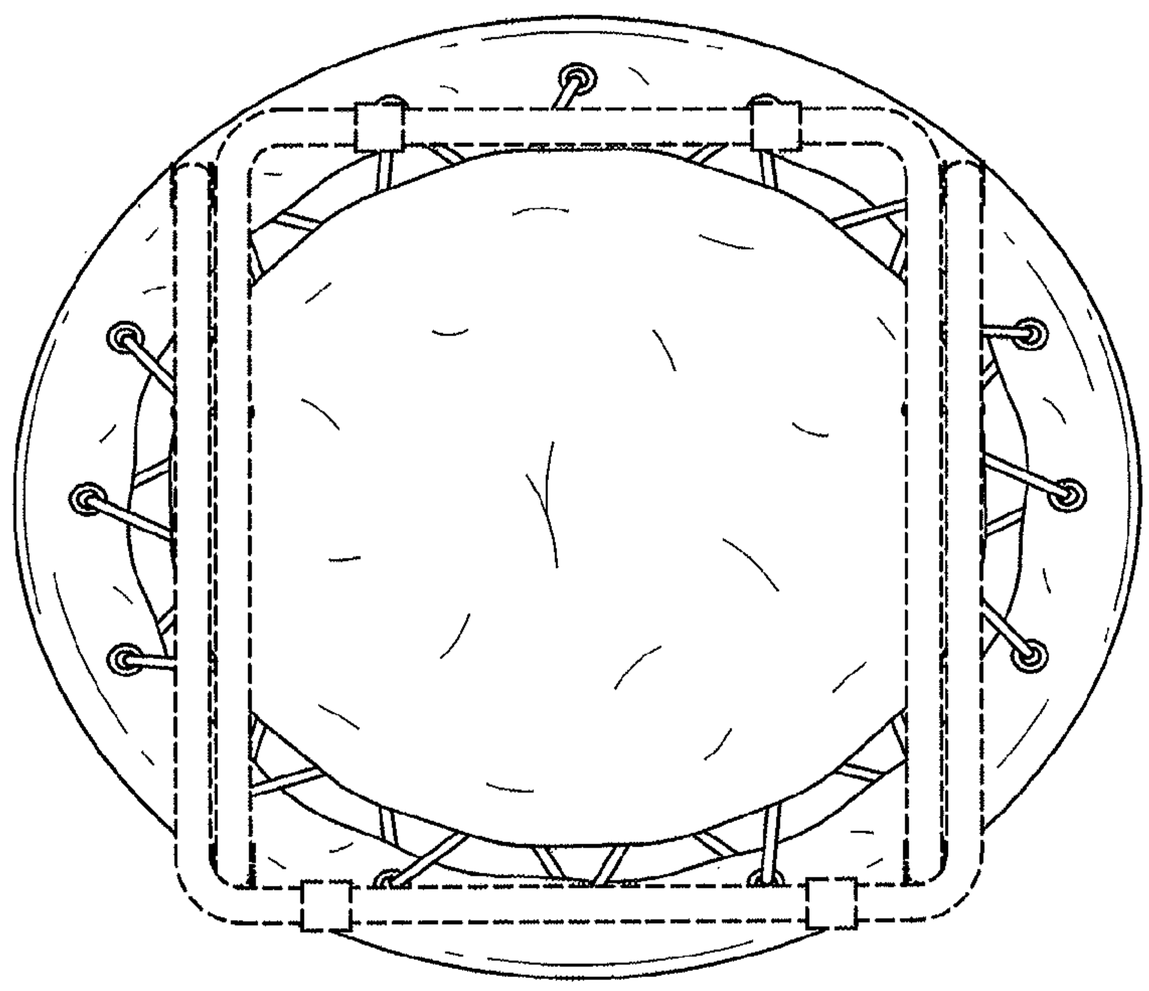

Fig. 6

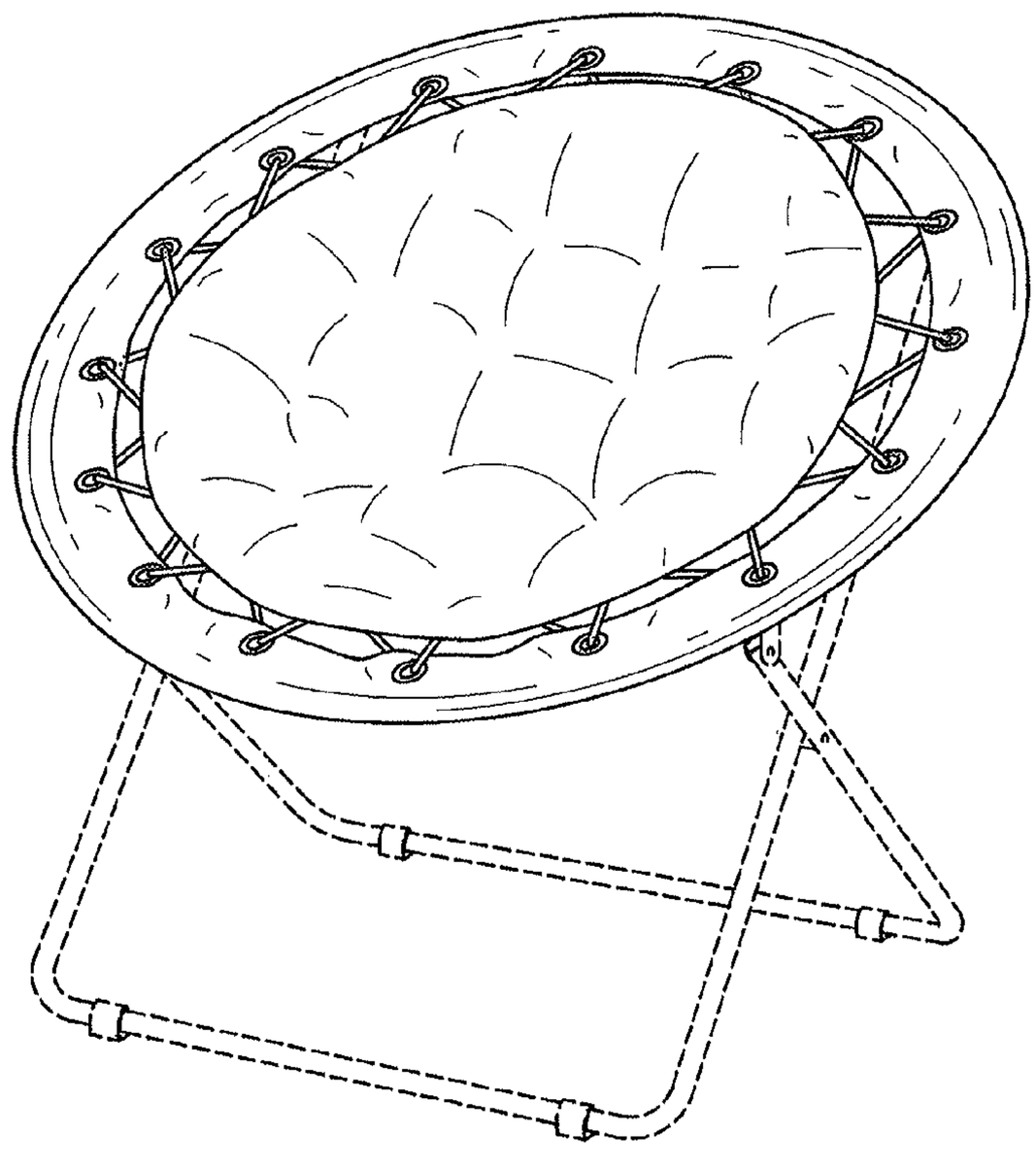

Fig. 7

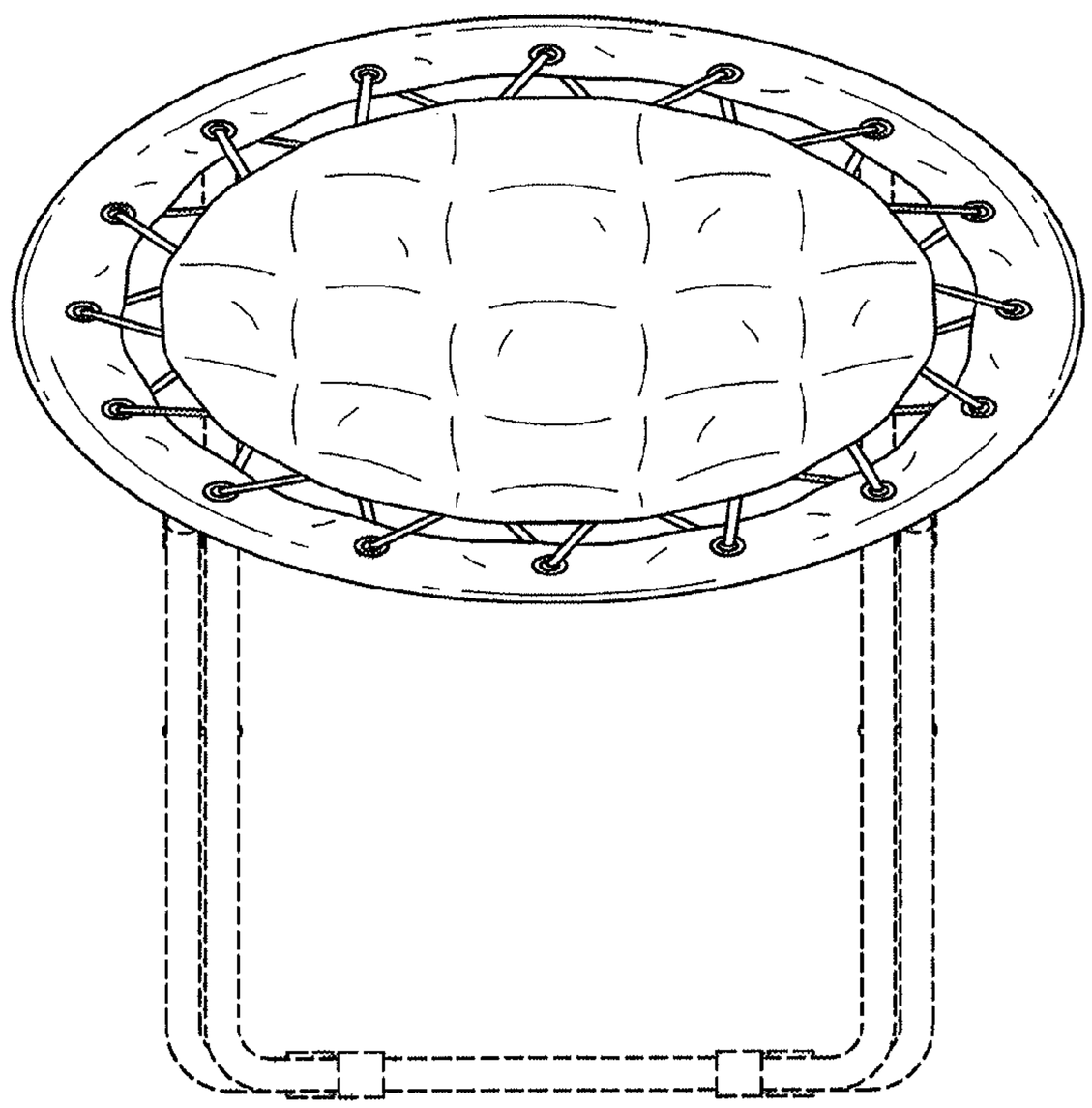

Fig. 8

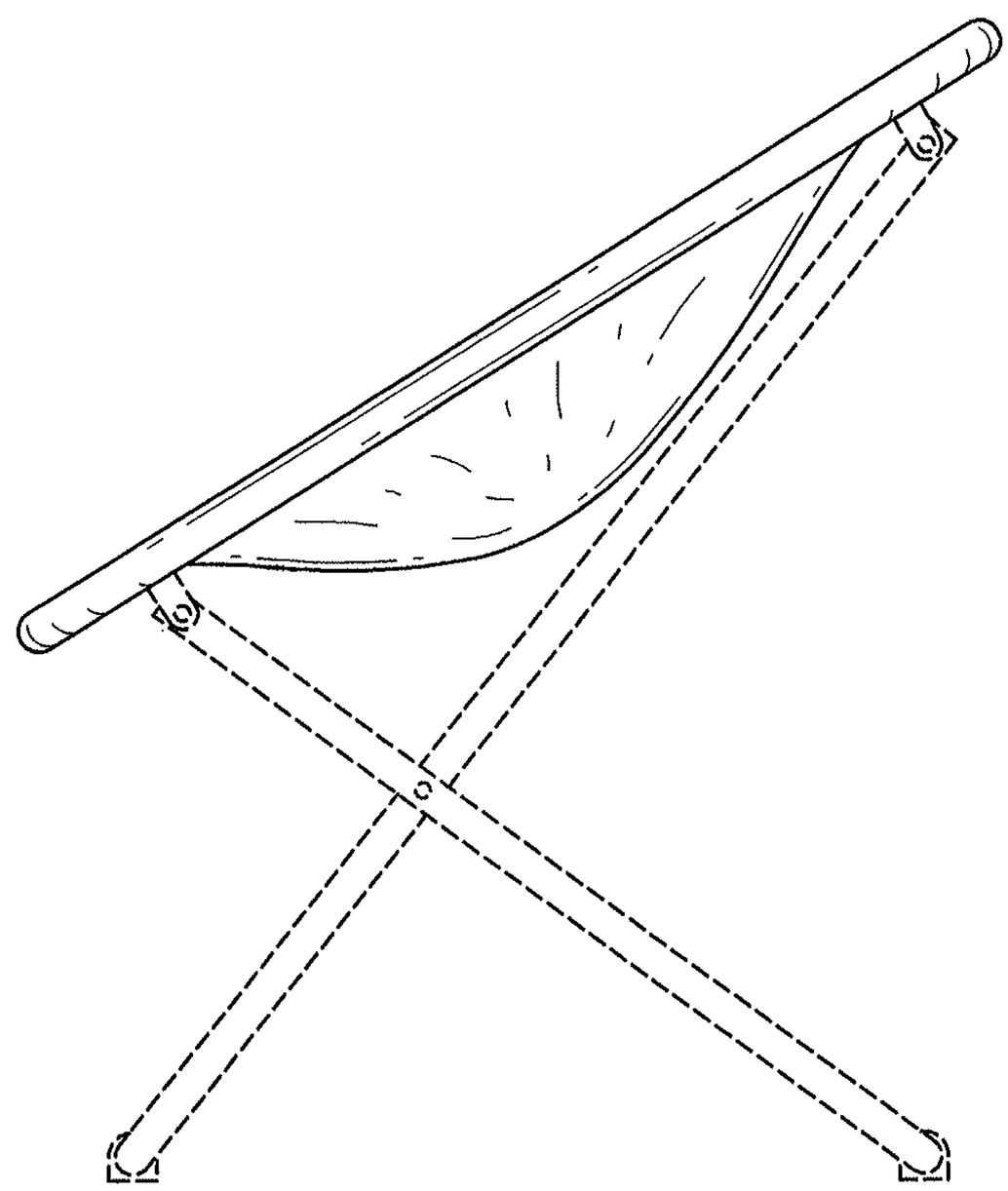

Fig. 9

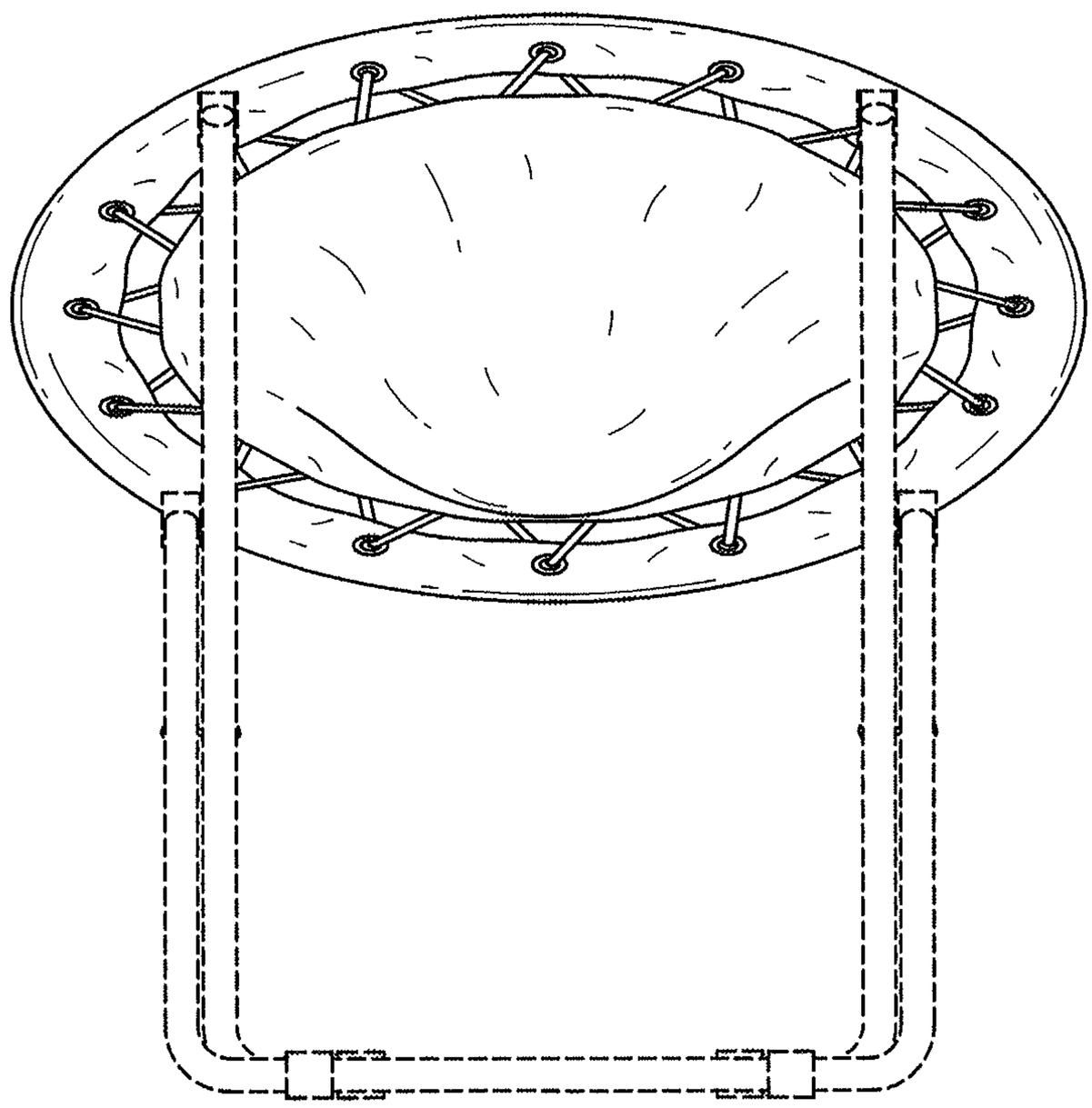

Fig. 10

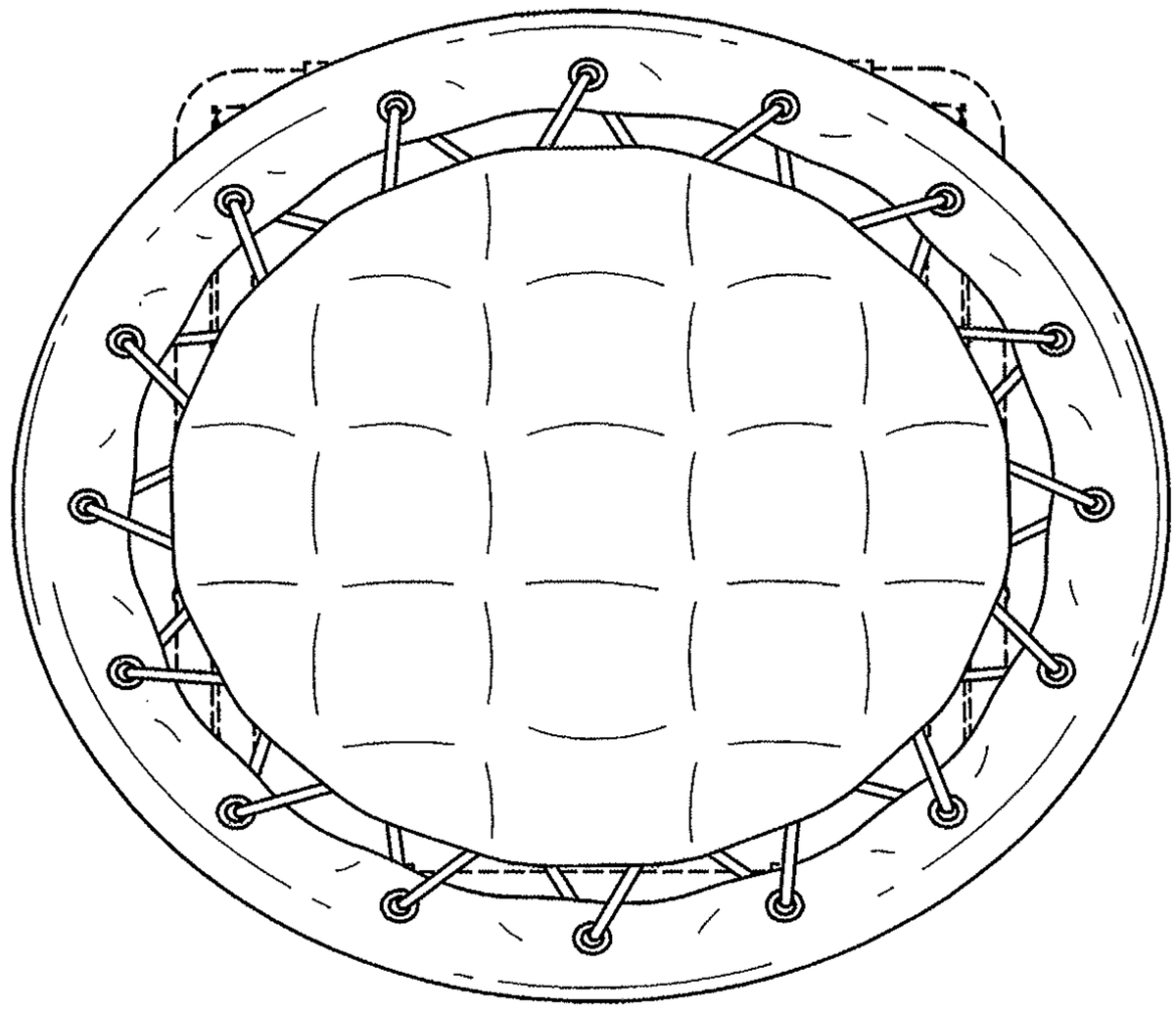

Fig. 11

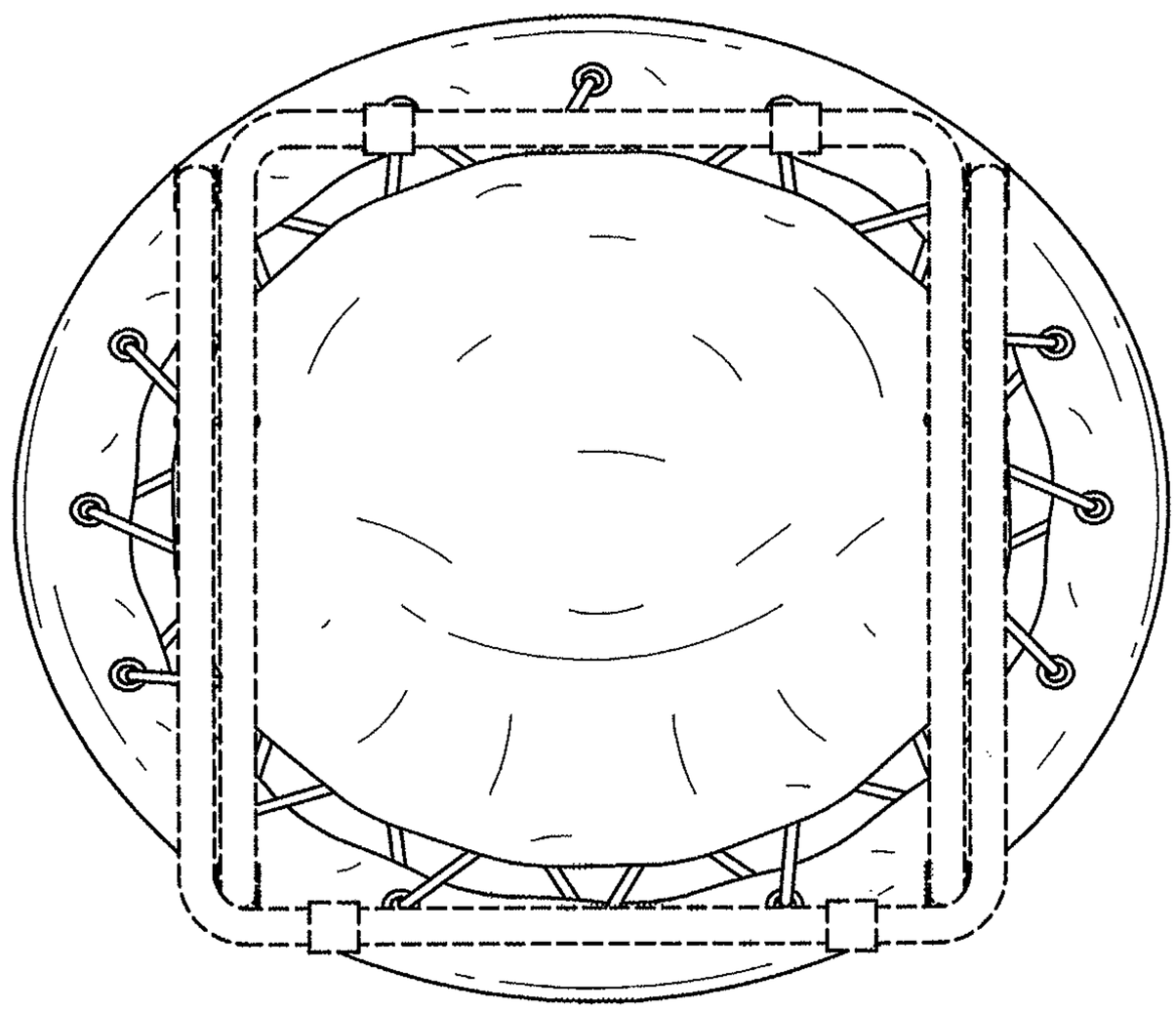

Fig. 12