US00D715410S

(12) United States Design Patent
Lohmann

(10) Patent No.: US D715,410 S
(45) Date of Patent: ** Oct. 14, 2014

(54) **ROOF DRAIN**

(71) Applicant: **Blucher Metal A/S**, Vildbjerg (DK)

(72) Inventor: **Hans Lohmann**, Soro (DK)

(73) Assignee: **Blucher Metal A/S**, Vildbjerg (DK)

(**) Term: **14 Years**

(21) Appl. No.: **29/432,756**

(22) Filed: **Sep. 20, 2012**

(30) **Foreign Application Priority Data**

Mar. 21, 2012 (EM) 002012476-0001
Mar. 21, 2012 (EM) 002075846-0001

(51) **LOC (10) Cl.** **23-01**

(52) **U.S. Cl.**
USPC **D23/259**

(58) **Field of Classification Search**
CPC F16L 23/00; F16L 27/00
USPC D23/259–269; D8/382, 387; D13/155; D24/129; 285/58, 83
See application file for complete search history.

(56) **References Cited**

U.S. PATENT DOCUMENTS

D307,046 S * 4/1990 Burgess et al. D23/259
5,291,619 A * 3/1994 Adorjan 4/252.6
D371,138 S * 6/1996 Waskiewicz D15/5
D385,956 S * 11/1997 Doughty et al. D23/259
D428,130 S * 7/2000 Zirk D23/393
D442,197 S * 5/2001 Willet D15/143
D462,256 S * 9/2002 Jaynes D8/382
D530,796 S * 10/2006 Zielke et al. D23/262
D571,645 S * 6/2008 Skoog D8/382
D579,759 S * 11/2008 Strait et al. D8/349
D606,186 S * 12/2009 Routh D23/393
D655,796 S * 3/2012 DeWitt et al. D23/269
D657,848 S * 4/2012 Howson D23/261
D662,572 S * 6/2012 Marquis-Martin D23/259
2004/0163165 A1 * 8/2004 Ortiz et al. 4/252.5

* cited by examiner

Primary Examiner — Eric Goodman
Assistant Examiner — John Reickel
(74) *Attorney, Agent, or Firm* — Sheridan Ross P.C.

(57) **CLAIM**

The ornamental design for a roof drain, as shown and described.

DESCRIPTION

FIG. **1** is a perspective view of a roof drain showing my new design;
FIG. **2** is a front elevation view of the design shown in FIG. **1**, a rear elevation view being a mirror image;
FIG. **3** is a top plan view of the design shown in FIG. **1**;
FIG. **4** is a left side view of the design shown in FIG. **1**, a right side view being a mirror image; and,
FIG. **5** is a bottom plan view of the design shown in FIG. **1**.

1 Claim, 3 Drawing Sheets

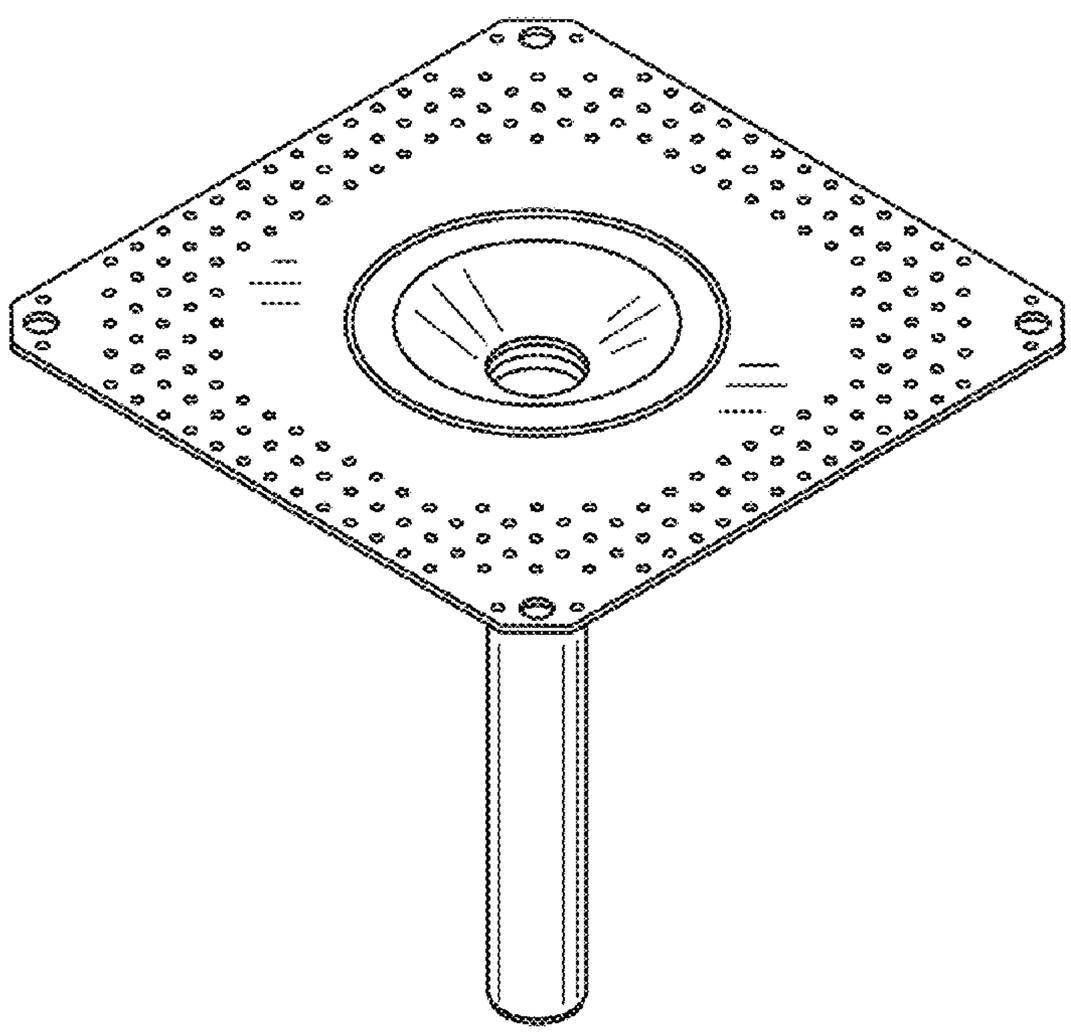

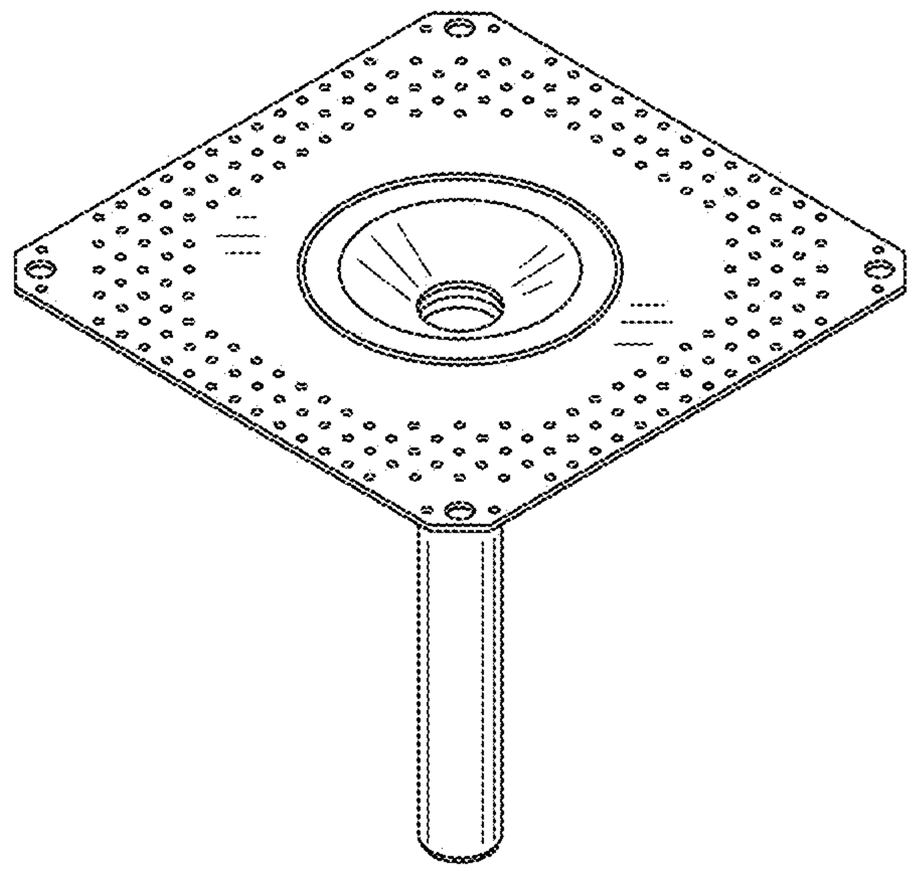

FIG.1

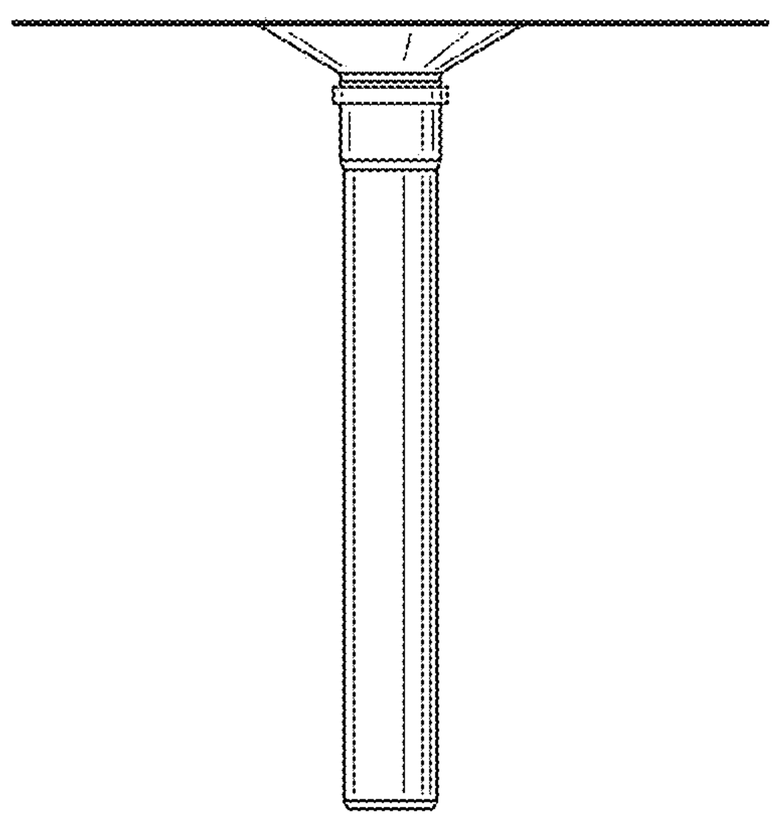

FIG.2

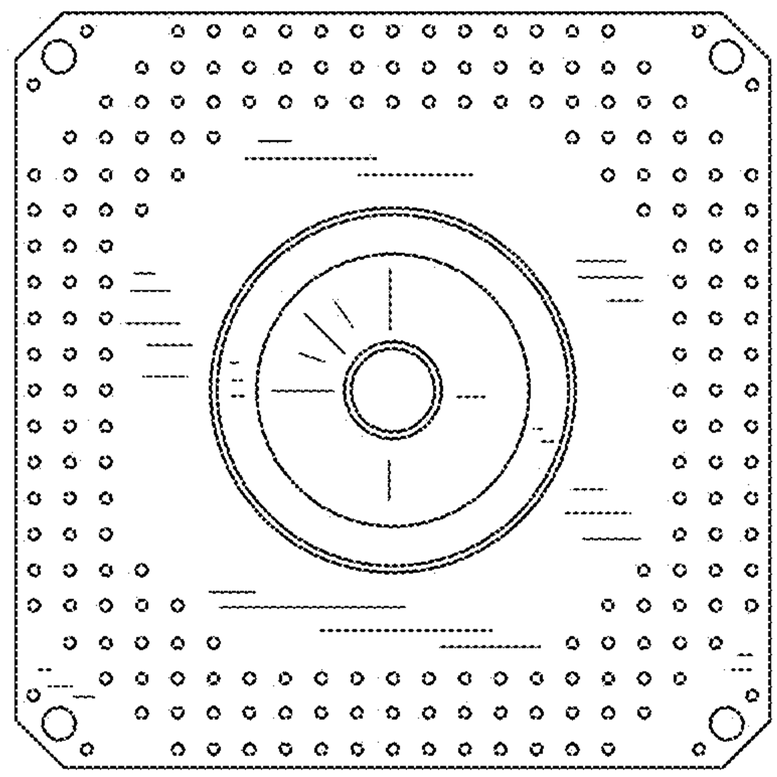

FIG.3

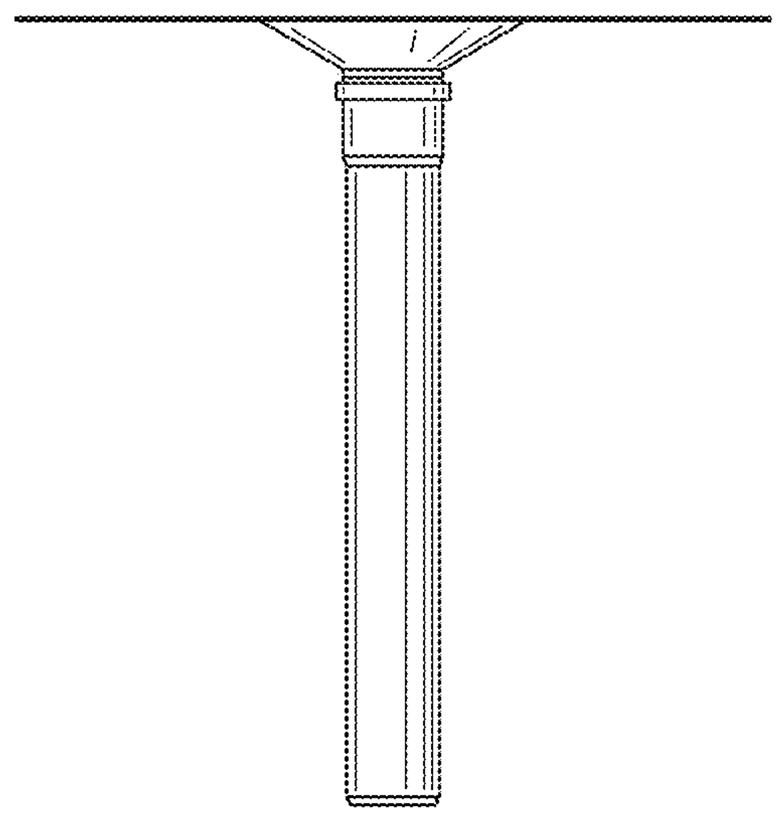

FIG.4

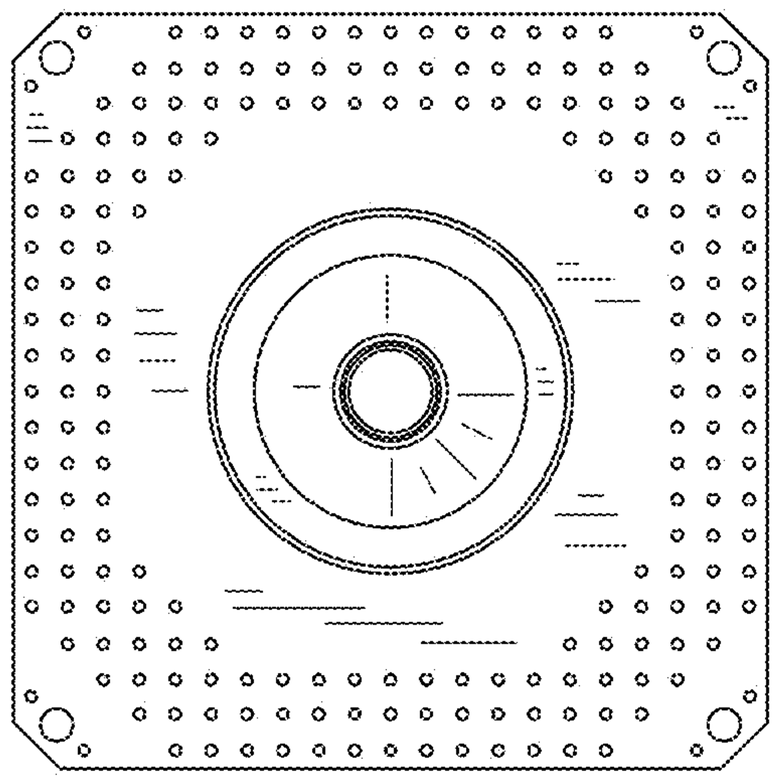

FIG.5